Volume II Appendices

Appendix A
RELAP5-3D© Input Data Requirements

1 Introduction....A1-1
1.1 Control Format....A1-1
1.2 Data Deck Organization....A1-1
1.3 Title Card....A1-2
1.4 Comment Cards....A1-2
1.5 Data Cards....A1-2
1.6 Continuation Cards....A1-4
1.7 Terminator Cards....A1-4
1.8 Sequential Expansion Format....A1-4
1.9 Upper/Lower Case Sensitivity....A1-5
1.10 Data Card Requirements....A1-5
2 Miscellaneous Control Cards....A2-1
2.1 Card 1, Developmental Model Control....A2-1
2.2 Print Control....A2-9
2.2.1 Card 2, Volume Print Control....A2-10
2.2.2 Card 3, Junction Print Control....A2-10
2.2.3 Card 4, Enable Printed Output Block....A2-10
2.2.4 Card 5, Disable Printed Output Block....A2-11
2.3 Card 100, Problem Type and Option....A2-14
2.4 Card 101, Input Check or Run Option....A2-15
2.5 Card 102, Units Selection....A2-15
2.6 Card 103, Restart Input File Control....A2-15
2.7 Card 104, Restart and Plot Output File Control....A2-17
2.8 Card 105, CPU Time Remaining and Diagnostic Edit/Dump....A2-18
2.9 Card 106, R5FORCE File Control....A2-19
2.10 Card 107, Steady State Options....A2-20
2.11 Card 110, Noncondensable Gas Species....A2-20
2.12 Card 115, Noncondensable Mass Fractions....A2-20
2.12.1 Card 115, Initial Mass Fraction for Each Noncondensable Species....A2-21
2.13 Card 119, Gravity Constant....A2-21
2.14 Cards 120 through 129, Hydrodynamic System Control....A2-21
2.14.1 Hydrodynamic System Card....A2-21
2.15 Cards 140 through 147, Self-Initialization Option Control....A2-22

2.15.1 Card 140, Self-Initialization Control A2-22
2.15.2 Cards 141 through 142, Self-Initialization Pump Controller and Identification A2-22
2.15.3 Cards 143 through 144, Self-Initialization Steam Flow Controller Identification A2-23
2.15.4 Cards 145 and 146, Self-Initialization Feedwater Controller Identification A2-23
2.15.5 Card 147, Pressure and Volume Control Component Identification A2-24

3 General and Kinetics Time Step Control Cards (Cards 200-299 and 2200-2299) A3-1

3.1 Card 200, Initial Time Value and User-Controlled Time Step A3-1

3.2 Cards 201 through 299, Time Step Control A3-1

3.3 Card 2200, Kinetics Time Step Control A3-4

3.4 Cards 2201 through 2299, Kinetics Time Step Data A3-6

4 Cards 301 through 399, Minor Edit Requests A4-1

4.1 General Quantities A4-1

4.2 System Quantities A4-2

4.3 Component Quantities A4-4

4.4 Volume Quantities A4-6

4.5 Junction Quantities A4-12

4.6 Heat Structure Quantities A4-15

4.7 Reflood-Related Quantities A4-17

4.8 Radiation/Conduction Enclosure Quantities A4-17

4.9 Reactor Kinetics Quantities A4-18

4.10 Control System Quantities A4-22

4.11 Interactive Variable Quantities A4-22

4.12 Trip Quantities A4-22

4.13 General Table Quantities A4-22

4.14 Radionuclide Transport Quantities A4-23

4.15 Cards 2080XXXX, Expanded Plot Variables A4-23

5 Cards 400 through 799 or 20600000 through 20620000, Trip Input Data A5-1

5.1 Card 400, Trips Cancellation A5-1

5.2 Card 20600000, Trip Card Series Type A5-1

5.3 Cards 401 through 599 or 20600010 through 20610000, Variable Trips A5-1

5.4 Cards 601 through 799 or 20610010 through 20620000, Logical Trips A5-3

5.5 Card 600, Trip Stop Advancement A5-3

6 Cards 801 through 1999, Interactive Input Data A6-1

7 Cards CCCXXNN, Hydrodynamic Components A7-1

7.1 Single-Volume Component A7-1

7.1.1 Card CCC0000, Single-Volume Name and Type A7-1
7.1.2 Cards CCC0101 through CCC0109, Single-Volume X-Coordinate Volume Data A7-2
7.1.3 Cards CCC0181 through CCC0189, Single-Volume Y-Coordinate Volume Data A7-4
7.1.4 Cards CCC0191 through CCC0199, Single-Volume Z-Coordinate Volume Data A7-5
7.1.5 Card CCC0111, Single-Volume ORNL ANS Interphase Model Pitch and Span Values A7-6
7.1.6 Card CCC0131, Single-Volume Additional Wall Friction A7-6
7.1.7 Cards CCC0141, Single-Volume Alternate Turbulent Wall Friction A7-7
7.1.8 Card CCC0200, Single-Volume Initial Conditions A7-7
7.1.9 Card CCC0300, Single-Volume Variable Volume Control A7-10
7.1.10 Card CCC0301 Single-Volume Noncondensable Mass Fraction A7-11

7.2 Time-Dependent Volume Component A7-11

7.2.1 Card CCC0000, Time-Dependent Name and Type A7-11
7.2.2 Cards CCC0101 through CCC0109, Time-Dependent Volume Geometry A7-12
7.2.3 Card CCC0200, Time-Dependent Volume Data Control Word A7-14
7.2.4 Cards CCC0201 through CCC0299, Time-Dependent Volume Data A7-17
7.2.5 Card CCC0301, Time-Dependent Volume Noncondensable Mass Fraction A7-18

7.3 Single-Junction Component A7-18

7.3.1 Card CCC0000, Single-Junction Name and Type A7-18
7.3.2 Cards CCC0101 through CCC0109, Single-Junction Geometry A7-19
7.3.3 Card CCC0110, Single-Junction Diameter and CCFL Data A7-22
7.3.4 Card CCC0111, Single-Junction Form Loss Data A7-22
7.3.5 Card CCC0113, Single-Junction Face Placement A7-23
7.3.6 Card CCC0201, Single-Junction Initial Conditions A7-23

7.4 Time-Dependent Junction Component A7-24

7.4.1 Card CCC0000, Time-Dependent Junction Name and Type A7-24
7.4.2 Card CCC0101, Time-Dependent Junction Geometry A7-24
7.4.3 Card CCC0113, Time-Dependent Junction Face Placement Data A7-26
7.4.4 Card CCC0200, Time-Dependent Junction Data Control Word A7-26
7.4.5 Cards CCC0201 through CCC0299, Time-Dependent Junction Data A7-27

7.5 Single Flexible Wall Component A7-28

7.5.1 Card CCC0000, Single Flexible Wall Name and Type A7-28
7.5.2 Cards CCC0101 through CCC0109, Single Flexible Wall Geometry A7-29

7.6 Pipe, Annulus, or Pressurizer Component A7-29

7.6.1 Card CCC0000, Pipe, Annulus, or Pressurizer Name and Type A7-29
7.6.2 Card CCC0001, Pipe, Annulus, or Pressurizer Information A7-30
7.6.3 Card CCC0003, Pipe, Annulus, or Pressurizer Magnetohydrodynamics (MHD) Card A7-32
7.6.4 Cards CCC0101 through CCC0199, Pipe, Annulus, or Pressurizer X-Coordinate Volume Flow Areas A7-33

7.6.5 Cards CCC1601 through CCC1699, Pipe, Annulus, or Pressurizer Y-Coordinate Volume Flow Areas A7-33
7.6.6 Cards CCC1701 through CCC1799, Pipe, Annulus, or Pressurizer Z-Coordinate Volume Flow Areas A7-33
7.6.7 Cards CCC0201 through CCC0299, Pipe, Annulus, or Pressurizer Junction Flow Areas A7-34
7.6.8 Cards CCC0301 through CCC0399, Pipe, Annulus, or Pressurizer X-Coordinate Volume Lengths A7-34
7.6.9 Cards CCC1801 through CCC1899, Pipe, Annulus, or Pressurizer Y-Coordinate Volume Lengths A7-34
7.6.10 Cards CCC1901 through CCC1999, Pipe, Annulus, or Pressurizer Z-Coordinate Volume Lengths A7-35
7.6.11 Cards CCC2901 through CCC2999, Pipe, Annulus, or Pressurizer Elbow/Spiral Angle/Radius of Curvature and Inclination Angle A7-35
7.6.12 Cards CCC0401 through CCC0499, Pipe, Annulus, or Pressurizer Volume Volumes A7-36
7.6.13 Cards CCC0501 through CCC0599, Pipe, Annulus, or Pressurizer Volume Azimuthal Angles A7-36
7.6.14 Cards CCC0601 through CCC0699, Pipe, Annulus, or Pressurizer Volume Inclination Angles A7-37
7.6.15 Cards CCC0701 through CCC0799, Pipe, Annulus, or Pressurizer Volume X-Coordinate Position or Elevation Changes A7-37
7.6.16 Cards CCC2101 through CCC2199, Pipe, Annulus, or Pressurizer Volume Y-Coordinate Position Changes A7-38
7.6.17 Cards CCC2201 through CCC2299, Pipe, Annulus, or Pressurizer Volume Z-Coordinate Position Changes A7-38
7.6.18 Cards CCC0801 through CCC0899, Pipe, Annulus, or Pressurizer Volume X-Coordinate Friction Data A7-38
7.6.19 Cards CCC2301 through CCC2399, Pipe, Annulus, or Pressurizer Volume Y-Coordinate Friction Data A7-39
7.6.20 Cards CCC2401 through CCC2499, Pipe, Annulus, or Pressurizer Volume Z-Coordinate Friction Data A7-40
7.6.21 Cards CCC2501 through CCC2599, Pipe, Annulus, or Pressurizer Volume Additional Wall Friction A7-40
7.6.22 Cards CCC2601 through CCC2699, Pipe, Annulus, or Pressurizer Volume Alternate Turbulent Wall Friction A7-41
7.6.23 Cards CCC0901 through CCC0999, Pipe, Annulus, or Pressurizer Junction Loss Coefficients A7-41
7.6.24 Cards CCC1001 through CCC1099, Pipe, Annulus, or Pressurizer Volume X-Coordinate Control Flags A7-42
7.6.25 Cards CCC2701 through CCC2799, Pipe, Annulus, or Pressurizer Volume Y-Coordinate Control Flags A7-43
7.6.26 Cards CCC2801 through CCC2899, Pipe, Annulus, or Pressurizer Volume Z-Coordinate Control Flags A7-43
7.6.27 Cards CCC1101 through CCC1199, Pipe, Annulus, or Pressurizer Junction Control Flags A7-44
7.6.28 Cards CCC1201 through CCC1299, Pipe, Annulus, or Pressurizer Volume Initial Conditions A7-45
7.6.29 Cards CCC2001 through CCC2099, Pipe, Annulus, or Pressurizer Initial Boron Concentrations A7-48

7.6.30 Card CCC1300, Pipe, Annulus, or Pressurizer Junction Conditions Control Words A7-48
7.6.31 Cards CCC1301 through CCC1399, Pipe, Annulus, or Pressurizer Junction Initial Conditions A7-48
7.6.32 Cards CCC1401 through CCC1499, Pipe, Annulus, or Pressurizer Junction Diameter and CCFL Data A7-48
7.6.33 Card CCC3001 through CCC3099, Pipe, Annulus, or Pressurizer Junction Form Loss Data A7-49
7.6.34 Cards CCC3101 through CCC3199, Pipe, Annulus, or Pressurizer Volume ORNL ANS Interphase Model Pitch and Span Values A7-50
7.6.35 Cards CCC3201 through CCC3299, Pipe, Accumulator, or Pressurizer Volume Noncondensable Mass Fractions A7-50

7.7 Branch, Separator, Jetmixer, Turbine, Feedwater Heater, or ECC Mixer Component A7-50

7.7.1 Card CCC0000, Branch, Separator, Jetmixer, Turbine, Feedwater Heater, or ECC Mixer Name and Type A7-51
7.7.2 Card CCC0001, Branch, Separator, Jetmixer, Turbine, Feedwater Heater, or ECC Mixer Information A7-54
7.7.3 Card CCC0002, Separator Component Options A7-54
7.7.4 Card CCC0003, Feedwater Heater Data A7-55
7.7.5 Cards CCC0101 through CCC0109, Branch, Separator, Jetmixer, Turbine, Feedwater Heater, or ECC Mixer X-Coordinate Volume Data A7-55
7.7.6 Cards CCC0181 through CCC0189, Branch, Separator, Jetmixer, Turbine, Feedwater Heater, or ECC Mixer Y-Coordinate Volume Data A7-58
7.7.7 Cards CCC0191 through CCC0199, Branch, Separator, Jetmixer, Turbine, Feedwater Heater, or ECC Mixer Z-Coordinate Volume Data A7-59
7.7.8 Card CCC0111, Branch, Separator, Jetmixer, Turbine, Feedwater Heater, or ECC Mixer ORNL ANS Interphase Model Pitch and Span Values A7-60
7.7.9 Card CCC0131, Branch, Separator, Jetmixer, Feedwater Heater, or ECC Mixer Additional Wall Friction A7-60
7.7.10 Card CCC0141, Branch, Separator, Jetmixer, Feedwater Heater, or ECC Mixer Alternate Turbulent Wall Friction A7-61
7.7.11 Card CCC0200, Branch, Separator, Jetmixer, Turbine, Feedwater Heater, or ECC Mixer Volume Initial Conditions A7-61
7.7.12 Cards CCCN101 through CCCN109, Branch, Separator, Jetmixer, Turbine, Feedwater Heater, or ECC Mixer Junction Geometry A7-65
7.7.13 Cards CCCN110, Branch, Separator, Jetmixer, Turbine, Feedwater Heater, or ECC Mixer Junction Diameter and CCFL Data A7-69
7.7.14 Cards CCCN112, Branch, Separator, Jetmixer, Turbine, Feedwater Heater, or ECC Mixer Junction Form Loss Data A7-70
7.7.15 Card CCCN113, Branch, Separator, Jetmixer, Turbine, Feedwater Heater, or ECC Mixer Junction Face Placement Data A7-71
7.7.16 Cards CCCN201, Branch, Separator, Jetmixer, Turbine, Feedwater Heater, or ECC Mixer Junction Initial Conditions A7-71
7.7.17 Card CCC0300, Turbine/Shaft Geometry A7-72
7.7.18 Card CCC0302, Turbine/Shaft Variable Frictional Torque A7-72
7.7.19 Card CCC0308, Turbine Variable Inertia A7-73
7.7.20 Cards CCCN901 through CCCN909, Separator Junction Maximum Volume Fractions A7-74
7.7.21 Card CCC0400, Turbine Performance Data A7-74

7.7.22 Card CCC0401, Type-3 Turbine Performance Data....A7-75
7.7.23 Card CCC0500, General Electric (GE) Separator Data....A7-76
7.7.24 Card CCC0501, General Electric (GE) Separator First Stage Data....A7-77
7.7.25 Card CCC0502, General Electric (GE) Separator Second Stage Data....A7-77
7.7.26 Card CCC0503, General Electric (GE) Separator Third Stage Data....A7-78
7.7.27 Card CCC0600, General Electric (GE) Dryer Data....A7-79
7.7.28 Card CCC0701 Branch, Separator, Jetmixer, Turbine, Feedwater Heater, or ECC Mixer Volume Noncondensable Mass Fractions....A7-79

7.8 Valve Junction Component....A7-79

7.8.1 Card CCC0000, Valve Name and Type....A7-79
7.8.2 Cards CCC0101 through CCC0109, Valve Junction Geometry....A7-80
7.8.3 Card CCC0110, Valve Junction Diameter and CCFL Data....A7-83
7.8.4 Card CCC0111, Valve Junction Form Loss Data....A7-83
7.8.5 Card CCC0113, Valve Junction Face Placement Data....A7-84
7.8.6 Card CCC0201, Valve Junction Initial Conditions....A7-85
7.8.7 Card CCC0300, Valve Type....A7-85
7.8.8 Cards CCC0301 through CCC0399, Valve Data and Initial Conditions....A7-85
7.8.9 Cards CCC0400 through CCC0499, Valve CSUBV Table....A7-89

7.9 Pump Component....A7-90

7.9.1 Card CCC0000, Pump Name and Type....A7-90
7.9.2 Cards CCC0101 through CCC0107, Pump Volume Geometry....A7-91
7.9.3 Card CCC0108, Pump Inlet (Suction) Junction....A7-92
7.9.4 Card CCC0109, Pump Outlet (Discharge) Junction....A7-94
7.9.5 Card CCC0110, Pump Inlet (Suction) Junction Diameter and CCFL Data....A7-94
7.9.6 Card CCC0111, Pump Outlet (Discharge) Junction Diameter and CCFL Data....A7-95
7.9.7 Card CCC0112, Pump Inlet (Suction) Junction Form Loss Data....A7-95
7.9.8 Card CCC0113, Pump Outlet (Discharge) Junction Form Loss Data....A7-96
7.9.9 Card CCC0200, Pump Volume Initial Conditions....A7-96
7.9.10 Card CCC0201, Pump Inlet (Suction) Junction Initial Conditions....A7-99
7.9.11 Card CCC0202, Pump Outlet (Discharge) Junction Initial Conditions....A7-100
7.9.12 Card CCC0300, Pump Volume Noncondensable Mass Fractions....A7-100
7.9.13 Card CCC0301, Pump Indicator and Option....A7-100
7.9.14 Cards CCC0302 through CCC0304, Pump Description....A7-102
7.9.15 Card CCC0308, Pump Variable Inertia....A7-104
7.9.16 Card CCC0309, Pump-Shaft Connection....A7-105
7.9.17 Card CCC0310, Pump Stop Data....A7-105
7.9.18 Cards CCCXX00 through CCCXX99, Pump Single-Phase Homologous Curves....A7-105
7.9.19 Cards CCCXX00 through CCCXX99, Pump Two-Phase Multiplier Tables....A7-106
7.9.20 Cards CCCXX00 through CCCXX99, Pump Two-Phase Difference Tables....A7-107
7.9.21 Cards CCC6001 through CCC6099, Pump Relative Motor Torque Data....A7-107
7.9.22 Card CCC6100, Pump Time-Dependent Rotational Velocity Control....A7-107
7.9.23 Cards CCC6101 through CCC6199, Pump Time-Dependent Rotational Velocity Data....A7-108

7.10 Compressor Component....A7-108

7.10.1 Card CCC0000, Compressor Name and Type A7-108
7.10.2 Card CCC0001, Compressor Information A7-109
7.10.3 Cards CCC0101 through CCC0107, Compressor Volume Geometry A7-109
7.10.4 Card CCC0108, Compressor Inlet (Suction) Junction A7-111
7.10.5 Card CCC0109, Compressor Outlet (Discharge) Junction A7-113
7.10.6 Card CCC0110, Compressor Inlet (Suction) Junction Diameter and CCFL Data A7-113
7.10.7 Card CCC0111, Compressor Outlet (Discharge) Junction Diameter and CCFL Data A7-114
7.10.8 Card CCC0112, Compressor Inlet (Suction) Junction Form Loss Data A7-114
7.10.9 Card CCC0113, Compressor Outlet (Discharge) Junction Form Loss Data A7-114
7.10.10 Card CCC0200, Compressor Volume Initial Conditions A7-115
7.10.11 Card CCC0201, Compressor Inlet (Suction) Junction Initial Conditions A7-118
7.10.12 Card CCC0202, Compressor Outlet (Discharge) Junction Initial Conditions A7-118
7.10.13 Card CCC0300, Compressor Volume Noncondensable Mass Fractions A7-118
7.10.14 Card CCC0301, Compressor Indicator and Option A7-119
7.10.15 Cards CCC0302 through CCC0304, Compressor Description A7-120
7.10.16 Card CCC0308, Compressor Variable Inertia A7-120
7.10.17 Card CCC0309, Compressor-Shaft Connection A7-121
7.10.18 Card CCC0310, Compressor Stop Data A7-121
7.10.19 Card CCC0401 through CCC0499, Compressor Relative Motor Torque Data A7-122
7.10.20 Card CCC0500, Compressor Time-Dependent Rotational Velocity Control A7-122
7.10.21 Cards CCC0501-CCC0599, Compressor Time-Dependent Rotational Velocity Data A7-123
7.10.22 Cards CCC09XX ($10 \le XX \le 99$), Compressor Relative Rotational Velocity Data A7-123
7.10.23 Cards CCCXX00 through CCCXX99 ($10 \le XX \le 99$), Compressor Performance Data. A7-123

7.11 Multiple Junction Component A7-124

7.11.1 Card CCC0000, Multiple Junction Name and Type A7-124
7.11.2 Card CCC0001, Multiple Junction Information A7-124
7.11.3 Cards CCC0NNM, Multiple Junction Geometry A7-124
7.11.4 Cards CCC1FFM, Multiple Junction Initial Condition A7-128
7.11.5 Cards CCC2GGM, Multiple Junction Diameter and CCFL Data A7-128
7.11.6 Card CCC3HHM, Multiple Junction Form Loss Data A7-129

7.12 Multiple Flexible Wall Component A7-130

7.12.1 Card CCC0000, Multiple Flexible Wall Name and Type A7-130
7.12.2 Card CCC0001, Multiple Flexible Wall Information A7-131
7.12.3 Cards CCC0NNM, Multiple Flexible Wall Geometry A7-131

7.13 Accumulator Component A7-132

7.13.1 Card CCC0000, Accumulator Name and Type A7-132
7.13.2 Cards CCC0101 through CCC0109, Accumulator Volume Geometry A7-133
7.13.3 Card CCC0131, Accumulator Additional Wall Friction A7-135

7.13.4 Card CCC0141, Accumulator Alternate Turbulent Wall Friction A7-136
7.13.5 Card CCC0200, Accumulator Tank Initial Thermodynamics Conditions A7-136
7.13.6 Card CCC1101, Accumulator Junction Geometry A7-136
7.13.7 Card CCC1102, Accumulator Form Loss Data A7-138
7.13.8 Card CCC2200, Accumulator Tank Initial Fill Conditions, Standpipe/Surgeline Length/Elevation, and Tank Wall Heat Transfer Terms A7-139

7.14 Multi-Dimensional Component A7-139

7.14.1 Card CCC0000, Multi-Dimensional Name and Type A7-139
7.14.2 Card CCC0001, Multi-Dimensional Information A7-141
7.14.3 Card CCC0002, Multi-Dimensional Rotation Angle Data A7-142
7.14.4 Cards CCC0XNN, Multi-Dimensional Mesh Interval A7-144
7.14.5 Cards CCC1NNN, Multi-Dimensional Volume Data and Control Flags A7-144
7.14.6 Cards CCC2NNN, Multi-Dimensional Volume Friction Data A7-146
7.14.7 Cards CCC3001 through CCC5999, Multi-Dimensional Junction Data and Control Flags A7-149
7.14.8 Cards CCC6NNN, Multi-Dimensional Volume Initial Condition A7-151
7.14.9 Cards CCC7001 through CCC9999, Multi-Dimensional Junction Initial Condition Data A7-154

7.15 PVM Coupling Junction Component A7-155

7.15.1 Card CCC0000, PVM Coupling Junction Name and Type A7-155
7.15.2 Cards CCC0101 through CCC0109, PVM Coupling Junction Geometry A7-155

8 Cards 1CCCGXNN, Heat Structure Input A8-1

8.1 Card 1CCCG000, General Heat Structure Data A8-1

8.1.1 General Heat Structure Data A8-1
8.1.2 Heat Structure Delete A8-4

8.2 Card 1CCCG001, Gap Conductance Model Initial Gap Pressure Data A8-4

8.3 Card 1CCCG003, Metal-Water Reaction Control A8-5

8.4 Card 1CCCG004, Fuel Cladding Deformation Model Control A8-5

8.5 Cards 1CCCG011 through 1CCCG099, Gap Deformation Data A8-6

8.6 Card 1CCCG100, Heat Structure Mesh Flags A8-6

8.7 Cards 1CCCG101 through 1CCCG199, Heat Structure Mesh Point Location Data (Radial) A8-7

8.7.1 Format 1 (Word 2 of Card 1CCCG100 is 1) A8-7
8.7.2 Format 2 (Word 2 of Card 1CCCG100 is 2) A8-7

8.8 Cards 1CCCG201 through 1CCCG299, Heat Structure Composition Data (Radial) A8-7

8.9 Cards 1CCCG301 through 1CCCG399, Heat Structure Source Distribution Data (Radial) A8-8

8.10 Card 1CCCG400, Initial Temperature Flag A8-8

8.11 Cards 1CCCG401 through 1CCCG499, Initial Temperature Data A8-8

8.11.1 Format 1 (Word 1 on Card 1CCCG400 = 0) A8-9

8.11.2 Format 2 (Word 1 on Card 1CCCG400 = -1) A8-9
8.12 Cards 1CCCG501 through 1CCCG599, Left Boundary Condition A8-9
8.13 Cards 1CCCG601 through 1CCCG699, Right Boundary Condition A8-15
8.14 Cards 1CCCG701 through 1CCCG799, Source Data A8-15
8.15 Card 1CCCG800, Additional Left Boundary Option A8-16
8.16 Cards 1CCCG801 through 1CCCG899, Additional Left Boundary A8-16
8.17 Card 1CCCG900, Additional Right Boundary Option A8-21
8.18 Cards 1CCCG901 through 1CCCG999, Additional Right Boundary A8-22
9 Cards 6SSNNXXX, Radiation/Conduction Enclosure Input A9-1
9.1 Card 60000000, Radiation/Conduction Enclosure Model Control A9-1
9.2 Card 6SS00000, Radiation/Conduction Enclosure Set A9-1
9.3 Card 6SSNN001, Radiation/Conduction Enclosure Heat Structure Data A9-2
9.4 Cards 6SSNN101 through 6SSNN199, Radiation/Conduction Enclosure View/Area Factors A9-3
10 Cards 201MMMNN, Heat Structure Thermal Property Data A10-1
10.1 Card 201MMM00, Composition Type and Data Format A10-1
10.2 Cards 201MMM01 through 201MMM49, Thermal Conductivity Data or Gap Gas Mole Fraction Data A10-1
10.2.1 Table Format A10-2
10.2.2 Functional Format A10-2
10.3 Cards 201MMM51 through 201MMM99, Volumetric Heat Capacity Data A10-3
10.3.1 Table Format A10-3
10.3.2 Functional Format A10-4
11 Cards 202TTTNN, General Table Data A11-1
11.1 Card 202TTT00, Table Type and Multiplier Data A11-1
11.2 Cards 202TTT01 through 202TTT99, General Table Data A11-2
12 Cards 20300000 through 20499999, Plot Request Input Data A12-1
13 Cards 205CCCNN or 205CCCCN, Control System Input Data A13-1
13.1 Card 20500000, Control Variable A13-1
13.2 Card 205CCC00 or 205CCCC0, Control Component Type A13-2
13.3 Cards 205CCC01 through 205CCC99 or 205CCCC1 through 205CCCC9, Control Component Data A13-3
13.3.1 Sum-Difference Component A13-3
13.3.2 Multiplier Component A13-3
13.3.3 Divide Component A13-4
13.3.4 Differentiating Components A13-4
13.3.5 Integrating Component A13-5

13.3.6 Delay Component A13-6
13.3.7 Functional Component A13-7
13.3.8 Standard Function Component A13-7
13.3.9 Unit Trip Component A13-8
13.3.10 Trip Delay Component A13-8
13.3.11 Integer Power Component A13-8
13.3.12 Real Power Component A13-9
13.3.13 Variable Power Component A13-9
13.3.14 Proportional-Integral Component A13-10
13.3.15 Lag Component A13-10
13.3.16 Lead-Lag Component A13-11
13.3.17 Constant Component A13-12
13.3.18 Shaft Component A13-12
13.3.19 PUMPCTL Component A13-14
13.3.20 STEAMCTL Component A13-14
13.3.21 FEEDCTL Component A13-15
13.3.22 Inverse Kinetics Component A13-16

14 Cards 220MMMXX, Radionuclide Transport Input A14-1

14.1 Card 22000000, Number of Radionuclide Species A14-1

14.2 Card 220MMM00, Basic Data for Radionuclide Specie A14-1

14.3 Cards 220MMM01-220MMM99, Radionuclide Transport Source Data A14-2

15 Cards 30000000 through 30099999, 310000000 through 339999999,
340000000 through 359999999, 390000000 through 399999999,
Reactor Kinetics Input A15-1

15.1 Card 30000000, Reactor Kinetics Type A15-1

15.2 Card 30000001, Reactor Kinetics Information A15-2

15.2.1 Point Kinetics Format A15-2
15.2.2 Nodal Kinetics Format A15-3

15.3 Card 30000002, Fission Product Decay Information A15-4

15.4 Card 30000003, Nodal Kinetics Control Information A15-6

15.5 Card 30000004, Nodal Kinetics Control Parameters A15-8

15.6 Card 30000005, Neutron Velocity Data A15-8

15.7 Card 30000006, Prompt Neutron Fission Spectrum Data A15-9

15.8 Card 30000007, Delayed Neutron Fission Spectrum Data A15-9

15.9 Card 30000008, Xenon/Samarium Calculation Option A15-9

15.10 Card 30000009, Core Age Parameter A15-10

15.11 Card 30000010, Krylov Solution Algorithm Information A15-10

15.12 Card 30000021, Group-wise Albedos for Krylov Solution A15-12

15.13 Cards 30000101 through 30000199, Delayed Neutron Constants A15-12

15.14 Cards 30000201 through 30000299, Fission Product Decay Constants A15-13

15.15 Cards 30000301 through 30000399, Actinide Decay Constants A15-13

15.16 Cards 30000401 through 30000499, Power History Data A15-14

15.17 Point Kinetics Feedback Input A15-14

15.17.1 Cards 30000011 through 30000020, Reactivity (or Scram) Curve or Control Variable Numbers A15-14
15.17.2 Cards 30000501 through 30000599, Density Reactivity Table A15-15
15.17.3 Cards 30000601 through 30000699, Doppler Reactivity Table A15-15
15.17.4 Cards 30000701 through 30000799, Volume Weighting Factors and Coefficients A15-15
15.17.5 Cards 30000801 through 30000899, Heat Structure Weighting Factors and Coefficients A15-16
15.17.6 Cards 30001701 through 30001799, Volume-Weighting Factors A15-17
15.17.7 Cards 30001801 through 30001899, Heat Structure Weighting Factors A15-18
15.17.8 Cards 300019C1 through 300019C9, Feedback Table Coordinate Data A15-18
15.17.9 Cards 30002001 through 30002999, Feedback Table Data A15-19

15.18 Nodal Kinetics Feedback Input A15-19

15.18.1 Cards 30010101 through 30010199, Bottom-Top (Z) Mesh Intervals A15-19
15.18.2 Cards 30010201 through 30010299, West-East (X) Mesh Intervals or Hexagonal Mesh Size A15-19
15.18.3 Cards 30010301 through 30010399, North-South (Y) Mesh Intervals A15-20
15.18.4 Cards 30010401 through 30010499, Assignment of Zone Figures to Axial Mesh Intervals A15-20
15.18.5 Cards 30010501 through 30010599, Assignment of Composition Figures to Axial Mesh Intervals A15-20
15.18.6 Cards 30010600, User Variable 1 Axial Distribution A15-21
15.18.7 Cards 30010601 through 30010699, Assignment of User Variable 1 Figures to Axial Mesh Intervals A15-21
15.18.8 Cards 30010700, User Variable 2 Axial Distribution A15-22
15.18.9 Cards 30010701 through 30010799, Assignment of User Variable 2 Figures to Axial Mesh Intervals A15-22
15.18.10 Cards 30010800, User Variable 3 Axial Distribution A15-22
15.18.11 Cards 30010801 through 30010899, Assignment of User Variable 3 Figures to Axial Mesh Intervals A15-23
15.18.12 Cards 30010900, User Variable 4 Axial Distribution A15-23
15.18.13 Cards 30010901 through 30010999, Assignment of User Variable 4 Figures to Axial Mesh Intervals A15-23
15.18.14 Cards 3002ZZ01 through 3002ZZ99, Assignment of Zones to Zone Figures A15-24
15.18.15 Cards 3003CC01 through 3003CC99, Assignment of Compositions to Composition Figures A15-24
15.18.16 Cards 3004MMMM, Assignment of Control Rod Groups to Kinetics Nodes A15-25
15.18.17 Card 300500000, Kinetics Axial Plane Initial Power Distribution A15-25
15.18.18 Cards 30050001 through 30050099, Zone Initial Power Distribution A15-25
15.18.19 Cards 3005PP01 through 3005PP99, Kinetics Node Initial Power Distribution Figures A15-25
15.18.20 Cards 3006UU01 through 3006UU99, User Variable 1 Figures A15-26
15.18.21 Cards 3007UU01 through 3007UU99, User Variable 2 Figures A15-26

15.18.22 Cards 3008UU01 through 3008UU99, User Variable 3 Figures A15-27
15.18.23 Cards 3009UU01 through 3009UU99, User Variable 4 Figures A15-27
15.18.24 Cards 30100001 through 30100099, Bundle Rotation Figure A15-28
15.18.25 Neutron Cross-Section Data for RAMONA Option A15-28
15.18.26 Neutron Cross-Section Data for HWR Option A15-32
15.18.27 Neutron Cross-Section Data for GEN Option A15-36
15.18.28 Neutron Cross Section Data for RBMK Option A15-46

15.19 Control Rod Model Data A15-52

15.19.1 Card 33000000, Global Control Rod Insertion Direction Data A15-52
15.19.2 Cards 3300RRRR, Control Rod Group Data A15-52
15.19.3 Card 3301RRRR, Control Rod Group Insertion Direction Data A15-53

15.20 Fixed Neutron Source Data A15-53

15.20.1 Cards 35IIJJKKN, Fixed Neutron Source Input Option. A15-53

15.21 Nuclear Detector Model A15-54

15.21.1 Card 390DD0000, Detector Data A15-54
15.21.2 Card 390DDSSS0, Source Data A15-54
15.21.3 Cards 390DDSSS1 through 390DDSSS9, Attenuation Data A15-54

16 Cards 1001 through 1999, Strip Request Data A16-1

17 RELAP5-3D©-Based Code Operating Procedures A17-1

Appendix B
User Guide for the PVM Coupling Interface

1 Introduction B-1

1.1 Background B-1

1.2 Basis of Coupling Methodology B-2

1.3 Subdivision of a Thermal-Hydraulic System B-3

1.4 Coupling Taxonomy B-3

2 General Considerations B-5

3 PVMEXEC Program B-6

3.1 Virtual Section B-7

3.1.1 Keyword ‘machine’ B-7
3.1.2 Keyword ‘wait’ B-7
3.1.3 Keyword ‘write’ B-8

3.2 Processes Section B-8

3.2.1 Keyword ‘machine’ B-8
3.2.2 Keyword ‘writes’ B-9
3.2.3 Keyword ‘uses’ B-9

3.3 Simulation Section B-9

3.3.1 Keyword ‘name’ B-9
3.3.2 Keywords ‘restart time’ B-10

3.3.3 Keywords ‘start time’ B-10
3.4 Messages Section B-10
3.4.1 Keywords ‘sends’ and ‘receives’ B-10
3.4.2 Keyword ‘awaits’ B-11
3.4.3 Keyword ‘preceeds’ B-11
3.5 Timesteps Section B-12
4 Examples of Coupled Simulations B-12
4.1 Explicit Coupling B-13
4.1.1 Parallel Explicit Coupling B-14
4.1.2 Sequential Explicit Coupling B-15
4.1.3 Heat Structure Coupling B-16
4.2 Semi-Implicit Coupling B-18
4.3 Kinetics Coupling B-20
4.4 Control Systems Coupling B-22
5 Coupling Errors B-24
6 References B-25

Appendix C
PVMEXEC© Input Data Requirements

1 Introduction C-1
2 Virtual Section of Input Deck C-2
3 Processes Section of Input Deck C-4
4 Simulation Section of Input Deck C-5
5 Message Section of Input Deck C-6
6 Time Step Information C-8

FIGURES

Appendix B
User Guide for the PVM Coupling Interface

Figure 1. Schematic for coupled problem domain B-27
Figure 2. Schematic for parallel explicit coupling B-28
Figure 3. Schematic for semi-implicit and sequential explicit thermal-hydraulic coupling B-29
Figure 4. Schematic of PVMEDA parallel explicit test case B-30
Figure 5. Listing of PVMEDAX template file B-31
Figure 6. Listing of PVMEDA1X template file B-32
Figure 7. Listing of PVMEDARX template file B-33
Figure 8. Listing of PVMEDAR1X template file B-34
Figure 9. Partial listing of output file from ‘parent’ process in PVMEDAX test case B-35
Figure 10. Partial listing of output file from ‘child’ process in PVMEDAX test case B-36
Figure 11. Schematic of PVMEDSX sequential explicit test case B-37
Figure 12. Listing of PVMEDSX template file B-38
Figure 13. Partial listing of output file from ‘leader’ process in PVMEDSX test case ...B-39
Figure 14. Partial listing of output file from ‘follower’ process in PVMEDSX test case B-40
Figure 15. Schematic of heat structure coupling B-41
Figure 16. Schematic of uncoupled test case for semi-implicit coupling B-42
Figure 17. Schematic of coupled test case for semi-implicit coupling B-43
Figure 18. Listing of template file for ‘pvmcorex’ test case B-44
Figure 19. Schematic of TYPPWR test case B-45
Figure 20. Schematic of reactor vessel in TYPPWR test case B-46
Figure 21. Schematic of coupled model of reactor vessel in kinetics coupling test cases B-47
Figure 22. Schematic of Kinetics Zones B-48
Figure 23. Listing of template file for pvmptx point kinetics coupling test case B-49
Figure 24. Listing of template file for pvmndx for nodal kinetics coupling test case B-50
Figure 25. Schematic of uncoupled control systems test case B-51
Figure 26. Schematic of coupled control systems test case B-52
Figure 27. Listing of template file for coupled control system test case B-53

Appendix D
Example of a Diagnostic Edit

Figure 1. Diagnostic edit from Edwards pipe problem with extras. D-3
Figure 2. Listing of common block JUNDATC from program RELAP5-3D© D-14

Figure 3. Listing of common block VOLDATC from program RELAP5-3D© D-17

TABLES

Appendix A
RELAP5-3D© Input Data Requirements

Table 2.2-1. Names and description of print blocks. A2-11
Table 8.12-1. Cards 1CCCG501 through 1CCCG599 and 1CCCG601 through 1CCCG699, Word 3, convection boundary type. A8-11
Table 15.18-1. Composition numbers for fuel channels. A15-46
Table 15.18-2. Composition numbers for non-fuel channels. A15-46
Table 15.18-3. Composition number for control rod channels. A15-47

/4.0

Appendix A
RELAP5-3D© Input Data Requirements

Appendix A
RELAP5-3D© Input Data Requirements

1 Introduction

This appendix completely describes data deck organization and data card requirements for all problem types allowed in RELAP5-3D©.

1.1 Control Format

Input is described in terms of input records or cards, where an input record or card is an 80-character record. Although punched cards are obsolete, the terminology is preserved in deference to decades continued usage. Input is normally entered from personal computers or workstations, and it is usually stored as disk files or is archived on tape, CD, DVD, or flash drives. Data are usually viewed as lines on a computer monitor or lines of printed output. For legacy reasons also, input files are often referred to as decks, as in a deck of computer cards. Throughout this manual, the words file and deck are used interchangeably, as are the words record and card.

RELAP5-3D© attempts to read a 96-character record. If the actual input record is smaller, blank characters are added to the end of the input record to extend it to 96 characters. Each 96-character input record, preceded by a sequential card number starting at one and incrementing by one, is printed as the first part of a problem output. Only the first 80 characters are used for RELAP5-3D© input; the additional 16 columns are treated as a comment field and are reserved for use by certain editors and utility programs.

Some editors provide for the optional storing of editor line numbers following the data portion of the record. Since many terminals default to 80 characters per line, it is convenient to limit the data record to 72 characters so that the data and editor-supplied line numbers fit on one line (eight columns for line number and separator, 72 columns of data). If the data field is 72 columns, the line numbers might be stored in columns 73 to 80. These line numbers will be processed by RELAP5-3D© as input, since RELAP5-3D© uses the first 80 characters. To avoid this, either request the editor to store line numbers starting at character position 81, put a terminating character before the line number, or do not store the line numbers. The line numbers, if saved, are listed in the output echo of the input data.

1.2 Data Deck Organization

A RELAP5-3D© problem input deck consists of at least one title card, optional comment cards, data cards, and a terminator card. A list of these input cards is printed at the beginning of each RELAP5-3D© problem. The order of the title, data, and comment cards is not critical except that only the last title card and, in the case of data cards having duplicate data card numbers, only the last data card is used. We recommend that for a base deck, the title card be first, followed by data cards in card number order. Comment cards should be used freely to document the input. For parameter studies and for temporary changes, a new title card with the inserted, modified, and deleted data cards and identifying comment cards

should be placed just ahead of the terminating card. In this manner, a base deck is maintained, yet changes are easily made.

When card format punctuation errors, such as an alphanumeric character in numeric fields are detected, a line containing a caret (^) located under the character causing the error and a message giving the card column of the error are printed. An error flag is set such that input processing continues, but the RELAP5-3D© problem is terminated at the end of input processing. A standard RELAP5-3D© error message (error message preceded by ********) is printed if a card error is found. Usually a card error will cause additional error comments to be printed during further input processing when the program attempts to process the erroneous data.

1.3 Title Card

A title card must be entered in each RELAP5-3D© input deck including both new and restart problems. A title card is identified by an equal sign (=) as the first nonblank character and must contain no more that 80 characters including the = sign. The title (remainder of the title card) is printed as the second line of the first page following the list of input data. If more than one title card is entered, the last one entered is used. For restart problems, the title in the restart input deck is compared to the title on the restart file, where the title on the restart file is the title in the original input deck. A restart problem is terminated with an input error if the titles are not identical.

1.4 Comment Cards

An asterisk (*) or a dollar sign ($) appearing as the first nonblank character identifies the card as a comment card. Blank cards are treated as comment cards. The only processing of comment cards is the printing of their contents. Comment cards may be placed anywhere in the input deck except before continuation cards.

1.5 Data Cards

Data cards may contain varying numbers of fields that may be integer, real (floating point), or alphanumeric. Blanks preceding and following fields are ignored.

The first field on a data card is a card identification number that must be an unsigned integer. The value for this number depends upon the data being entered and will be defined for each type. If the first field has an error or is not an integer, an error flag is set. Consequently, data on the card are not used, and the card will be identified by the card sequence number in the list of unused data cards. After each card number and the accompanying data are read, the card number is compared to previously entered card numbers. If a matching card number is found, the data entered on the previous card are replaced by data from the current card. If the card being processed contains only a card number, the card number and data from the last previous card with that card number are deleted. Deleting a nonexistent card is not considered an error. If a card causes replacement or deletion of data, a statement is printed indicating that the card is a replacement card.

Comment information may follow the data fields on any data card by beginning the comment with an asterisk (*) or dollar ($) sign.

A numeric field must begin with either a digit (0 through 9), a sign (+ or -), or a decimal point (.). A comma or blank (with one exception, subsequently noted) terminates the numeric field. The numeric field has a number part and optionally an exponent part. A numeric field without a decimal point or an exponent is an integer field; a number with either a decimal point, an exponent, or both is a real field. A real number without a decimal point (i.e., with an exponent) is assumed to have a decimal point immediately in front of the first digit. The exponent part denotes the power of ten to be applied to the number part of the field. The exponent part has an E or D, a sign (+ or -), or both followed by a number giving the power of ten. These rules for real numbers are identical to those for entering data in FORTRAN E or F fields except that no blanks (with one exception) are allowed between characters to allow real data written by FORTRAN programs to be read. The exception is that a blank following an E or D denoting an exponent is treated as a plus sign. Acceptable ways of entering real numbers, all corresponding to the quantity 12.45, are illustrated by the following seven fields:

12.45, +12.45, 0.1245+2, 1.245+1, 1.245E 1, 1.245E+1, 1.245D+1 .

When entering an integer zero or a decimal zero for either an integer or floating point quantity, the zero can be written in either form. Thus, a floating point zero can be entered as 0 with a decimal point or simply as 0 without a decimal point, and an integer zero can be entered as 0 without a decimal point or as 0 with a decimal point.

Alphanumeric fields have three forms. The most common alphanumeric form is a field that begins with a letter and terminates with a blank, a comma, or the end of the card. After the first alphabetic character, any characters except commas and blanks are allowed. The second form is a series of characters delimited by quotes (“) or apostrophes (’). Either a quote or an apostrophe initiates the field, and the same character terminates the field. The delimiters are not part of the alphanumeric word. If the delimiter character is also a desired character within the field, two adjacent delimiting characters are treated as a character in the field. The third alphanumeric form is entered as nHz, where n is the number of characters in the field, and the field starts at the first column to the right of H and extends for n columns. With the exception of the delimiters (even these can be entered if entered in pairs), the last two alphanumeric forms can include any desired characters. In all cases, the maximum number of alphanumeric characters that can be stored in a word is eight. If the number of characters is less than eight, the word is left justified and padded to the right with blanks. If more than eight characters are entered, the field generates as many words as needed to store the field, eight characters per word, and the last word is padded with blanks as needed. Regardless of the alphanumeric type, at least one blank or comma must separate the field from the next field.

Most computers (e.g., workstations, CRAY, and IBM) hold only eight characters per word. All alphanumeric words required by RELAP5-3D©, such as components types, system names, or processing options, have thus been limited to eight characters. We highly recommend that the user limit all other one-word alphanumeric quantities to eight characters so that input decks can be easily used on all computer

versions. Examples of such input are alphanumeric names entered to aid identification of components in output edits.

The total number of words on all cards may not exceed 2,097,151. The largest card number allowed is 536,870,911.

1.6 Continuation Cards

A continuation card, indicated by a plus sign (+) as the first nonblank character on a card, may follow a data card or another continuation card. Fields on each card must be complete, that is, a field may not start on one card and be continued on the next card. The data card and each continuation card may have a comment field starting with an asterisk (*) or dollar ($) sign. No card number field is entered on the continuation card, since continuation cards merely extend the amount of information that can be entered under one card number. Deleting a card deletes the data card and any associated continuation cards. The total number of words on a card and its continuation cards may not exceed 2,047.

1.7 Terminator Cards

The input data are terminated by a slash or a period card. The slash and period cards have a slash (/) and a period (.), respectively, as the first nonblank character. Comments may follow the slash and period on these cards.

When a slash card is used as the problem terminator, the list of card numbers and associated data used in a problem is passed to the next problem. Cards entered for the next problem are added to the passed list or act as replacement cards, depending on the card number. The resulting input is the same as if the slash card was removed from the input data. If a slash card terminates the replacement cards, the process is repeated, with the original problem cards plus the cards between the first slash card and the second slash card plus the cards between the second slash card and the next termination card being added to the passed list. This continues until a period card is reached.

When a period card is used as the problem terminator, all previous input is erased before the input to the next problem is processed.

1.8 Sequential Expansion Format

Several different types of input are specified in sequential expansion format. This format consists of sets of data, each set containing one or more data items followed by an integer. The data items are the parameters to be expanded, and the integer is the termination point for the expansion. The expansion begins at one more than the termination point of the previous set and continues to the termination point of the current set. For the first set, the expansion begins at one. The termination points are generally volume, junction, or mesh point numbers, and always form a strictly increasing sequence. The input description will indicate the number of words per set (always at least two) and the last terminating point. The terminating point of the last expansion set must equal the last terminating point. Two examples are given.

The first example is for the volume flow areas in a pipe component; the format is two words per set in sequential expansion format for nv sets. Using the number of volumes in the pipe (nv) as 10, the volume flow areas could be entered as

0010101 0.01,10 .

In this case, the volume flow areas for volumes 1 through 10 have the value 0.01.

The second example shows how the pipe volume friction data could be input. The input consists of three words per set for nv sets. The three words designate the wall roughness, hydraulic diameter (input of zero causes the code to calculate it), and volume number. Possible data might be

0010801 1.0-6,0,8 1.0-3,0,9

0010802 1.0-6,0,10 .

Here, volumes 1 through 8 and 10 have the same values, and volume 9 has a different value.

1.9 Upper/Lower Case Sensitivity

Historically, computer systems allowed only upper case alphabetic characters. Accordingly, the following input descriptions use upper case for required input, e.g., SNGLVOL, 1.25E5. Now, many systems have upper and lower case alphabetic characters, and some applications are case sensitive, others not. At the INL, required input must be in lower case, and the user should check the requirements at other installations. At installations with both upper and lower case capability, there are utilities and editors that can easily switch alphabetic characters to the desired case.

1.10 Data Card Requirements

In the following description of the data cards, the card number is given with a descriptive title of the data contained on the card. Next, an explanation is given of any variable data that are included in the card number. Then, the order of the data, the type, and the description of the data item are given. The type is indicated by A for alphanumeric, I for integer, and R for real.

2 Miscellaneous Control Cards

2.1 Card 1, Developmental Model Control

This card has been added to the code for the convenience of developers in testing model improvements or new models. This card is not a standard input feature of the code. The description of this card has been added to the input requirements because several laboratories are receiving test versions to assist in the development and testing of the code. Anyone using this card must realize that they are selecting experimental options still under development. Furthermore, these options may change more frequently than the revision of this input manual. Thus, before using the options, users should obtain the brief listing of current options from the code (described below) and verify those descriptions against this manual.

The purpose of this card is to allow developers and analysts to quickly test new models by activating or deactivating a model through simple input instead of program modification, compilation, and loading. Ninety-nine logical variables having only false or true values are provided and defined at the start of program execution as false. This input sets the logical variables to true or resets them to false at the beginning of a new problem or at any restart. Fortran IF statements added as part of the experimental coding activate or deactivate models based on the values of the logical variables.

As described above, up to 99 options can be defined and the options are identified with a number from 1 through 99. Which options are defined and what they control are very much version dependent. The usual practice is to enter the option capability using a currently unused option number as the new model or improvement is first coded. During further development and testing, the model may change and the effect of the option can change in a manner ranging from large to subtle. When the model has been completed or even abandoned, the production version of the model is coded and the option capability is removed. The option number is then available for reuse with a completely different model. Thus, the options are version dependent as to what option numbers are in use, what models they control, and the particular features of the models. Accordingly, these options should be used only by those in direct contact with the developers.

Each current option is described below. In light of the discussion above, the user should verify that the code version being used corresponds to this description. Programmers using this option feature are asked to include coding that issues error messages when unused options are selected and to issue a brief statement of the purpose of selected options. Remember, however, that all coding associated with these options is experimental and these output conventions may not be thoroughly checked.

Up to 99 numbers consisting of 0 or any of the currently available option numbers may be entered on this card. A positive nonzero number, n, activates Option n by setting the logical variable n to true; a negative nonzero number, -n, deactivates Option n by setting the logical variable n to false. Attempting to activate an unused option is an error, and attempting to deactivate an already inactive option or an unused option is also an error. Adding options or deactivating options is allowed at a restart; the previously defined options will remain. The status of the options is printed in any NEW or RESTART problem containing this card or a RESTART problem in which the restart point had an option selected. The printout

includes a listing of the 99 option numbers and a false (option not selected) or a true (option selected) value plus the brief description of each selected option.

The number 0 is not an option number but may be entered to force the brief descriptions of all available options to be printed regardless of whether they are active. The 0 input should be used only once to observe the available options and then removed so that the list better emphasizes the selected options.

The number 100 is an option that is always active [i.e., the logical variable n (=100) is always true] and can be used to activate coding which is being tested by a developer. The number 100 should not be entered on a card; if it is entered, an input error will occur.

W1-100(I) Zero or an available option number as described above.

Option 0. This option prints all option descriptions.

Option 1. This options adds viscous stress terms to the momentum equations for the semi-implicit scheme using the MULTID 1-D option and 1-D components without the simvisc ‘ifdef’ option. For the semi-implicit scheme, the simvisc option means the momentum flux is calculated using the volume velocity times the donored volume velocity; without this option, the momentum flux is calculated using the volume velocity plus the artificial viscosity.

Option 2. This option sets the interfacial mass transfer to zero and the direct heating heat transfer coefficient to 10^5 W/m^3·K.

Option 3. This option uses inconsistent noncondensables choking. This change makes the junction sound speed calculation method inconsistent with the volume sound speed calculation method.

Option 5. This option uses the old EPRI interphase friction.

Option 6. This option uses static quality instead of void fraction for the partitioning of non-correlation wall heat transfer options 2xxx, 3xxx, and 4xxx, when a boundary volume is present.

Option 7. This option reduces the interface drag and the virtual mass. It is used for the gravity wave calculations.

Option 8. This option provides time step control based on the change in void fraction and is designed to limit the time step when the void fraction in any cell is decreasing rapidly such as during periods of condensation. The time step will be repeated if the decrease in void fraction in any hydrodynamic volume is considered too large. The time step will be repeated if the new void fraction is less than 0.001 and the old void fraction was greater

than 0.01. The time step will also be repeated if the new void fraction is between 0.01 and 0.10 and the change in void fraction during the time step exceeds 20% of the new void fraction. If the new void fraction exceeds 0.10, the time step will be repeated if the change exceeds 50% of the new void fraction. The time steps are repeated only when the void fraction is decreasing. This option is being tested in conjunction with Options 10 and 12 for improved performance at low pressures.

Option 9. This option provides a transition to plug flow when the vapor/gas velocity exceeds the criterion for transition from stratified flow in horizontal geometries. The need for this change occurs during the reflood phase in the horizontal core of the Hanford N-Reactor. The process tubes in the core region are long and have a small diameter. As subcooled coolant enters the process tubes, high condensation occurs that results in local depressurization and high vapor/gas velocities towards the condensation site. Instabilities occur that eventually cause the code to fail. This changes introduces a plug flow model that limits condensation to a value that is just large enough to condense all the vapor that can flow at the critical velocity, utilizing the full channel cross-sectional area. The critical velocity is the velocity large enough to cause transition from a stratified flow condition. The concept behind this model is that condensation lowers the local pressure and draws in steam which pushes the liquid into a plug. The area of the plug limits condensation and reduces vapor/gas flow which causes a return to stratified flow.

Option 10. This option provides time step control based on change in pressure within a hydrodynamic volume. This change causes the code to repeat a time step if the change in pressure during a time step exceeds the old time value, the new time value, or 50,000 Pa. This time step control allows the pressure to change by no more than a factor of two during a time step. This change generally causes the code to run slower but more reliably. With this change activated, the code will more accurately track pressure waves and oscillations but may cause certain problems to run unacceptably slowly. This option has no effect if Option 8 is not selected.

Option 11. This option modifies the coding of light water (h2o) for metastable states near the critical point and uses linear interpolation rather than cubic interpolation between points in the thermodynamic property file for specific volume and isothermal compressibility. This option also modifies the coding of hydrogen (h2), lithium (li), potassium (k), helium (he), nitrogen (n2), sodium (na), sodium-potassium (nak), lithium-lead (lipb), ammonia (nh3), glycerol (glycerol), blood (blood), lead-bismuth (bipb), carbon dioxide (co2), new style helium (hen), new style xenon (xen), new style helium-xenon (henxen), new style molten salt 1 (ms1), new style molten salt 2 (ms2), new style molten salt 3 (ms3), and new style molten salt 4), as is done for light water (h2o).

Option 12. This option provides a user controlled (on/off) water packer developed for horizontal reactors such as the Hanford N-Reactor. The interfacial friction coefficient term for the momentum equation, C_i, is adjusted as a function of vapor/gas void fraction. For void

fractions of 0.001 or less, C_i is forced to an arbitrarily large value of 10^{10}. For void fractions greater than 0.01, the regularly calculated C_i is used. For void fractions between 0.001 and 0.01, a cubic interpolation scheme is used to adjust C_i between the calculated value and $10^{10} N \cdot s^2/m^5$. As a cell is calculated to fill with liquid and the calculated cell pressure rises, the lower inertia vapor/gas is the phase first to respond, either moving on to the next cell or moving back to an upsteam cell. The effect of this model is that, as the void fraction decreases, the interfacial drag is increased, thus allowing the moving vapor/gas to either drag liquid on to the next cell or impede the incoming liquid from an upstream cell. In either case, the model eases the overfilling and overpressurization of the cell.

Option 13. This option activates vertical stratification changes.

Option 14. This option turns off constitutive relations and should only be used for testing advancement of the basic advancement scheme for two-phase conditions. Do not use for single phase conditions.

Option 15. This option uses the minimum Courant limit for all the volumes in the time step control for the semi-implicit scheme.

Option 17. This option allows the code to run up to the Courant limit (option 60) with a multiplication factor of four instead of two and a reduction factor of 0.25 instead of 0.5 used in the mass error check for the time step control.

Option 18. This option adds the sharp interface and reverse void profile logic from RELAP5/MOD2.5.

Option 19. This option uses the Bestion correlation (in RELAP5/MOD2.5) rather than the EPRI correlation (in RELAP5-3D©) for bundles (when volume flag b = 1).

Option 20. Changes the two-phase region of the modified Henry-Fauske critical flow model. This option has no effect if the modified Henry-Fauske critical flow model is not selected. This option, when activated, is used by both the semi-implicit solution scheme and the nearly-implicit solution scheme.

Option 21. Do not use. Presently option only acquires additional storage arrays for testing numerical techniques.

Option 23. This option selects a Godunov boron transport algorithm that greatly reduces the numerical diffusion of boron compared to the standard algorithm.

Option 24. This option selects a Savannah River Laboratory (SRL) subcooled boiling model.

Option 25. This option linearizes the interfacial heat transfer for the nearly-implicit scheme.

Option 26. This option activates a converging flow option within the three-dimensional hydrodynamic component model.

Option 27. This option is used so that two of the MULTID test problems in the developmental assessment can be executed without a code update. This option sets the theta velocity in the outer-most ring of the rigid body rotation and R-Theta symmetric flow problems to 1.0 m/s.

Option 28. This option applies modeling that results in large time steps being allowed for cases of intense oxidation at low pressure ($< 2 \times 10^5$ Pa).

Option 29. This option accurately solves the momentum equations at low velocities.

Option 32. This option activates the water stretch logic.

Option 33. This option uses border profile LU matrix routines for solution of hydrodynamic equations. In the future, this option will be removed since the border profile LU matrix routines are the default.

Option 34. This option selects a generalized minimum residual iterative solver instead of border profile LU matrix routines for solution of hydrodynamic equations.

Option 35. This option selects the sparse matrix routines for solution of hydrodynamic equations. This option was the default solver for older versions of the code.

Option 36. This option limits metastable extrapolation to 50 K.

Option 37. This option turns off the umbrella model. When the umbrella model is on, an upper limit is placed on the liquid interfacial heat transfer coefficient (H_{if}) when the liquid is subcooled. The limit is umbrella shaped so as to force the coefficient to small values as the void fraction approaches 0.0 or 1.0.

Option 38. This option turns off momentum flux for the semi-implicit scheme if the amplification factor is greater than one.

Option 40. This option uses an optional formulation of the cross-derivative for the theta momentum equation for the 3-D semi-implicit model.

Option 41. This option includes energy dissipation due to form loss (code calculated abrupt area change loss and user-specified loss).

Option 42. This option applies a stronger unchoking test for junctions with an abrupt area change.

Option 43. This option uses iteration to calculate the hydrodynamic conditions at the throat for critical flow.

Option 45. This option selects the newly developed model for condensing interphase heat transfer. The coding for this option is not complete.

Option 47. This option activates the linear implicit drags logic for the semi-implicit scheme and deactivates the linear implicit drags and implicit gravity for the nearly-implicit scheme.

Option 49. This option requests use of three-dimensional numerical approximations at external junctions to the MULTID component.

Option 50. This option turns off the velocity flip-flop for all junctions.

Option 51. Normally, water packing is activated in all volumes unless specifically disabled by an input volume flag. This option disables water packing for all volumes.

Option 52. Normally, the choking model is activated for all junctions unless specifically disabled by an input junction flag. This option disables the choking model for all junctions.

Option 54. This option changes the two-phase to single phase vapor/gas transition truncation limit in subroutine EQFINL for the semi-implicit scheme.

Option 55. This option is a collection of modeling improvements designed to minimize numerical sources of oscillations for low pressure two-phase flow simulations. Specifically, this option affects: Interfacial heat transfer for annular mist, mist pre-CHF, and mist post-CHF flow regimes. The liquid-side interfacial heat transfer coefficient has been modified to replace “ad hoc” correlations with more physical models.

Option 57. This option modifies the phasic partitioning of the wall friction so that all of the wall friction is applied to the liquid film in the annular mist flow regime. This option is necessary to compute realistic values of the liquid film thickness. By default, the film thickness, used to calculate laminar condensation heat transfer, is determined from a correlation. When card 1 option 57 is enabled, the predicted film thickness, calculated using void fraction and the heat transfer diameter, is used for laminar condensation heat transfer calculations.

Option 58. This option changes the smoothing used for the bubbly flow liquid interfacial heat transfer coefficient between the liquid superheat and liquid subcooled regions.

Option 59. This option enables time step reason logging. Two log files are created in the output folder: ‘dtReasonLogSummary.csv’ is a summary of the time step reasons in comma

separated value (csv) format. This format can be read by spreadsheet programs such as Excel or Openoffice Calc. ‘dtReasonLogDetails.txt’ is a detailed list of the reasons that cause time step reductions or repeats. This file is formatted as YAML which is a standard text file format that is both human readable and parseable. YAML libraries are freely available for various programming languages and can be used to mine the details file content for specific information of interest.

Option 60. This option modifies time step control for the Courant limit. It allows the time step to run up to the Courant time step rather than halving and doubling.

Option 61. This option further modifies constitutive relationships to reduce numerical oscillations at low pressure. Specifically, this option affects:

1. Vertical stratification, where this model is used for the purpose of defining the character of the two-phase interface to evaluate the interfacial heat transfer coefficient and interfacial area. The criteria used to determine if the interface is “stratified,” as opposed to a “normal” vertical flow regime such as slug flow, have been modified.

2. Interfacial heat transfer for bubbly and slug flow regimes, where the liquid-side interfacial heat transfer coefficient has been modified to replace “ad hoc” correlations with more physical models.

Option 62. This option uses new developed changes to the Chen F factor in subroutine PREDNB.

Option 64. This option uses the junction velocity based Courant limit rather than the volume based Courant limit.

Option 65. This option changes the subcooled boiling model by modifying the fraction of nucleate boiling heat flux that generates vapor when the bulk liquid is subcooled. The modification minimizes the “on/off” behavior associated with low-pressure/low-flow conditions.

Option 66. This option implements donor/acceptor differencing in vertical stratification volumes.

Option 67. This option implements velocity squared instead of velocity • velocity-donored for momentum flux.

Option 68. This option implements velocity - j times (velocity - L - velocity - K) instead of velocity • velocity-donored for momentum flux.

Option 69. This option uses a momentum flux with a donored velocity calculated using the actual donored void fraction in the numerator instead of a floored value.

Option 71. This option uses constant temperature extrapolation for superheated liquid properties as opposed to the default constant pressure extrapolation. It reduces the mass error in many cases.

Option 72. This option uses Yankee Atomic smoothing in interphase drag for vertical and horizontal flow.

Option 74. This option turns on the new interphase mass transfer model. The coding for this option is not complete.

Option 76. This option uses a modified momentum difference equation that has been cleared by voidga • voidfa • rhoga • rhofa.

Option 77. This option introduces the new geometric restriction on the stratification entrainment/pullthrough model. The coding for this option is not complete.

Option 78. This option uses a modified C-infinity definition that is dependent on Reynolds number and void fraction.

Option 79. This option allows the user to use trapezoidal rule at 1-D to 3-D external junctions.

Option 80. This option adds the scaling factor to the diagonal of the Jacobian squared matrix ten times if necessary.

Option 81. This option uses 1-D form for diagonal momentum flux terms in the 3-D equations.

Option 82. This option implements the Gardner correlation ($C_0 = 1$) for tanks ($D > 0.24$ m) and low flow rates and uses the Kataoka-Ishii correlation for high up/down flows as before. This option must be used in conjunction with option 78 to be effective.

Option 83. This option turns on the new improved solution of the hydrodynamics field equations, which uses a combination of scaling and pivoting.

Option 84. This option puts in derivative of density with respect to pressure in the horizontal stratification force.

Option 85. This option puts in derivative of density with respect to pressure in the gravitational force.

Option 86. This option adds time smoothing to the thermal stratification model.

Option 87. This option uses 0.01 in the term ‘percnt’ in subroutine PHANTV plus a 2% ramp.

Option 88. This option does not throw air away when steam disappears.

Option 89. This option computes the derivative of the interfacial coefficients with respect to volume void fraction for the nearly-implicit scheme.

Option 90. This option ramps interfacial mass transfer to zero based on four criteria (exponential).

Option 91. This option ramps interfacial mass transfer to zero based on four criteria (linear).

Option 92. This option modifies the junction flow regime for 3-D horizontal junctions.

Option 93. This option modifies the 3-D momentum flux calculation to use the pure LeVeque flux splitting method for the semi-implicit scheme.

Option 94. This option modifies the 3-D momentum flux calculation to use the pure LeVeque flux splitting method for the nearly-implicit scheme.

Option 95. This option reverts to the original macroscopic properties in the nearly-implicit scheme.

Option 96. This option activates the new source term methodology in the nearly-implicit scheme.

Option 97. This option uses implicit properties in outflow fluxes in the nearly-implicit scheme.

Option 98. This option modifies the 3-D momentum flux calculation to use the first order upwind method for the semi-implicit scheme.

Option 99. This option adds interfacial heat transfer from the volume above the vertically stratified volume.

2.2 Print Control

The following section describes the input by which the user can specify the contents of the printed output. As discussed in Volume II, Section 8.3 of the manual, the printed output consists of input edits, major edits, minor edits, and diagnostic edits. The input edits and major edits occur in the output file by default, however parts of the major edits can be omitted using Cards 201-299, Word 4. For minor edits to occur in the printed output, Cards 301-399 are required. For diagnostic edits to occur in the printed output, Card 105 is required. The printed output is divided into blocks and an individual block may be added or deleted from the printed output. Blocks can be enabled by use of Card 4 or blocks can by disabled by use of Card 5. Either Card 4 or Card 5, but not both input cards, may be included in an input deck. If neither card is included in an input deck, all available printout appears on the printed output file. In addition to specifying which blocks appear in the printed output, the volumes and/or junctions for which information is printed within each block can be specified on Cards 2 and 3, respectively. The print control information is not saved for restart. If the print control effect needs to be carried into a restart, these cards will need to be re-entered in the input deck.

2.2.1 Card 2, Volume Print Control

This card is an optional card. If this card is present, the major edits, minor edits (need Cards 301-399), and diagnostic edits (need Card 105) contain information for only the volumes listed on this card. The complete input edits will still appear. Single volume identifiers may be entered as well as pairs of volume identifiers. Pairs of volume identifiers specify a range of volumes to be printed and the second identifier in the pair must be a negative number and must be separated from the first number in the pair by a white space. The volume identifiers in a pair must also be in increasing numerical order. There is no limit to the number of single volume identifiers or pairs of identifiers which may be listed on this card. Heat structures connected to the volumes listed on this card are printed on the major edits and diagnostic edits. If the entire heat structure print block of the major edit is suppressed by the action of either Card 4 or 5, no heat structure information is printed even if the volume to which a particular heat structure is attached is listed on this card. The same is true for the heat structure portion of the diagnostic edit, where the heat structure information for heat structures connected to volumes listed on this card is added to the diagnostic edit unless that portion of the diagnostic edit is suppressed by the action of Cards 4 or 5.

W1(I) Volume identifier.

W2(I) Volume identifier.

W3(I) Volume identifier.

.....

2.2.2 Card 3, Junction Print Control

This card is an optional card. If this card is present, the major edits, minor edits (need Cards 301-399), and diagnostic edits (need Card 105) contain information for only the junctions listed on this card. The complete input edits will still appear. The rules for specifying junctions are the same as for specifying volumes on Card 2.

W1(I) Junction identifier.

W2(I) Junction identifier.

W3(I) Junction identifier.

.....

2.2.3 Card 4, Enable Printed Output Block

This is an optional card. If this card is present, printed output [input edits, major edits, minor edits (needs Cards 301-399), and diagnostic edits (need Card 105)] from the blocks listed on this card are added

to the printed output file. All blocks not listed on this card are suppressed. The names of the blocks and a short description of the blocks are contained in **Table 2.2-1**.

W1(A) Name of first block of printed output to be enabled.

W2(A) Name of second block of printed output to be enabled.

W3(A) Name of third block of printed output to be enabled.

.....

2.2.4 Card 5, Disable Printed Output Block

This is an optional card. The action of this card is similar to that of Card 4, except that printed output [input edits, major edits, minor edits (need Cards 301-399), and diagnostic edits (need Card 105)] blocks listed on this card are suppressed rather than being enabled. Blocks not listed on this card are enabled.

W1(A) Name of first block of printed output to be disabled.

W2(A) Name of second block of printed output to be disabled.

W3(A) Name of third block of printed output to be disabled.

.....

Table 2.2-1 Names and description of print blocks.

Name	Description of Print Block
ACCUM	Diagnostic edit from subroutine ACCUM
BRNTRN	Diagnostic edit from subroutine BRNTRN
CCFL	Diagnostic edit from subroutine CCFL
CHFCAL	Diagnostic edit from subroutine CHFCAL
CONDEN	Diagnostic edit from subroutine CONDEN
DITTUS	Diagnostic edit from subroutine DITTUS
EQFINL	Diagnostic edit from subroutine EQFINL
FWDRAG	Diagnostic edit from subroutine FWDRAG
HT1TDP	Diagnostic edit from subroutine HT1TDP
HT2TDP	Diagnostic edit from subroutine HT2TDP

Table 2.2-1 Names and description of print blocks. (Continued)

Name	Description of Print Block
HTADV	Diagnostic edit from subroutine HTADV
HTFILM	Diagnostic edit from subroutine HTFILM
HTFINL	Diagnostic edit from subroutine HTFINL
HTRC1	Diagnostic edit from subroutines HTRC1 and QFHTRC
HTRCN2	Diagnostic edit from subroutine HTRCN2
HYDRO	Diagnostic edit from subroutine HYDRO
ICOMPT	Diagnostic edit from subroutine ICOMPT
ISTATE	Diagnostic edit from subroutine ISTATE
JCHOKE	Diagnostic edit from subroutine JCHOKE
JPROP	Diagnostic edit from subroutine JPROP
NONCND	Diagnostic edit from subroutine NONCND
PHANTJ	Diagnostic edit from subroutine PHANTJ
PHANTV	Diagnostic edit from subroutine PHANTV
PIMPLT	Diagnostic edit from subroutine PIMPLT
PINTFC	Diagnostic edit from subroutine PINTFC
PREDNB	Diagnostic edit from subroutine PREDNB
PRESEQ	Diagnostic edit from subroutine PRESEQ
PSTDNB	Diagnostic edit from subroutine PSTDNB
QFMOVE	Diagnostic edit from subroutine QFMOVE
SIMPLT	Diagnostic edit from subroutine SIMPLT
SSTCHK	Diagnostic edit from subroutine SSTCHK
STACC	Diagnostic edit from subroutine STACC
STATE	Diagnostic edit from subroutine STATE
STATEP	Diagnostic edit from subroutine STATEP
SUBOIL	Diagnostic edit from subroutine SUBOIL
SYSITR	Diagnostic edit from subroutine SYSITR
SYSSOL	Diagnostic edit from subroutine SYSSOL

Table 2.2-1 Names and description of print blocks. (Continued)

Name	Description of Print Block
TSTATE	Diagnostic edit from subroutine TSTATE
VALVE	Diagnostic edit from subroutine VALVE
VEXPLT	Diagnostic edit from subroutine VEXPLT
VFINL	Diagnostic edit from subroutine VFINL
VIMPLT	Diagnostic edit from subroutine VIMPLT
VLVELA	Diagnostic edit from subroutine VLVELA
VOLVEL	Diagnostic edit from subroutine VOLVEL
TRIP	Section in major edit describing trips
POWER	Sections in major edit describing reactor power and nodal kinetics data
VOLUME	Section in major edit describing volumes
JUNCTION	Section in major edit describing junctions
HEATSTR	Section in major edit describing heat structures
RADHT	Section in major edit describing radiation/conduction enclosure heat transfer
REFLOOD	Section in major describing reflood model
CONTROL	Section in major edit describing control system
INPUT	Printout of input processing
MIEDIT	Minor edits
ZONETH	Section in major edit describing thermal hydraulic properties in zones for nodal kinetics
XSECT	Section in major edit describing the neutron cross sections, flux, power, power density, and relative power density in nodes for nodal kinetics and section printing composition coefficients during input processing for nodal kinetics
CNTLRODS	Section in major edit describing control rod positions for nodal kinetics
NODPRDST	Section in major edit describing axial and radial power distributions for nodal kinetics

Table 2.2-1 Names and description of print blocks. (Continued)

Name	Description of Print Block
RADNUCLD	Section in major edit describing output of radionuclide transport model
DETECTR	Section in major edit describing nuclear detector responses

2.3 Card 100, Problem Type and Option

This card is always required. This is discussed further in Volume V, Section 4.1.2.

W1(A) Problem type. Enter one of the following: NEW, NEWATH, RESTART, PLOT, REEDIT, or STRIP.

NEW specifies a new simulation problem. NEWATH can be used in place of NEW. RESTART specifies continuation from some point in a previous problem using information from the restart file. The PLOT capability is not now functional. PLOT specifies plotting results from a previous simulation run using the plot file. REEDIT has not been implemented. STRIP specifies that data are to be extracted (stripped) from the plot file, and only the data specified are written to the STRIP file.

W2(A) Problem option. This word is needed if W1 is NEW, NEWATH, or RESTART and is optional if W1 is STRIP. If NEW, NEWATH, or RESTART is entered, enter either STDY-ST or TRANSNT to specify the type of simulation. The STDY-ST option is discussed in Volume II, Section 7.1.2. Note the cautions discussed in Section 2.6 when the problem option is changed from STDY-ST to TRANSNT or vice versa. When STRIP is entered in W1, W2 may be optionally entered with BINARY, FMTOUT, or MBINARY. The STRIP option is described in Section 16 of this appendix that describes Cards 1001-1999. BINARY is assumed if W2 is not entered. BINARY or MBINARY indicate an unformatted file written in machine independent binary (default) or machine dependent binary. FMTOUT indicates an ASCII formatted file containing the same information written as 80-column records. A single unformatted record contains the same information as stored on multiple ASCII records (N of them) according to the following format rules:

STRIP Record 1. (5A8,10X,A8)

STRIP Record 2. (A10,3I10)

STRIP Record 3. (8A10)

STRIP Record 4. (A10,7I10/(8I10))

STRIP Record 5,..., N. (A10, 5X,1P,4E15.6/(5E15.6)).

2.4 Card 101, Input Check or Run Option

This card is optional for all types. This is discussed further in Volume V, Section 4.1.3.

W1(A) Option. Enter either INP-CHK or RUN; if this card is omitted, RUN is assumed. If INP-CHK is entered, the problem execution stops at the end of input processing; if RUN is entered, the problem is executed if no input errors are detected. This card has no effect on a CMPCOMS problem.

2.5 Card 102, Units Selection

This card is optional for all problem types. If the card is omitted, SI units are assumed for both input and output. If the card is used, enter either SI or BRITISH for each word. SI units used are a mixture of kg, m, and s; pressure is in the basic combined units of Pa = kg•m/(s^2•m^2), and heat source or power is in W. British units used are a mixture of lb_m (pounds mass), ft, and s; pressure is in lb_f/in^2 (lb_f is pounds force), heat energy is in Btu, and heat source or power is in Btu/s or MW; thermal conductivity and heat transfer units use s, not h. Reactor kinetics uses W, MeV, cm, ppm, and barns for some of the variables for both SI and British.

The user should carefully consider the input units requirements specified in this manual (Volume II, Appendix A). The user should also carefully consider the output units requirements specified in this manual (Volume II, Appendix A); the output units are used for the major edits and minor edits. These requirements are identified in parenthesis next to each input and output listing; SI units requirements are listed first; British units requirements are listed second. If only one requirement is identified in parenthesis, it is used for both SI units requirements and British units requirements.

This is discussed further in Volume V, Section 4.1.4.

W1(A) Input units.

W2(A) Output units. If this word is missing, SI units are assumed for output.

2.6 Card 103, Restart Input File Control

This card is required for all problem types (W1 of Card 100) except NEW and NEWATH, and it is <u>not</u> allowed for type NEW or NEWATH.

This is discussed further in Volume V, Section 4.1.5.

When the problem option (W2 on Card 100) is the same as the problem being restarted, the steady-state or transient is continued, and data on the RESTRT file up to the point of restart are saved. If

the restart continues from the point the previous problem terminated, restart and plot information is added to the end of the previous RESTRT file. If the restart is prior to the termination point of the previous simulation, restart and plot data after the point of restart are overwritten by new results. A copy should be saved if RESTRT files from each simulation are needed. If the problem options are different, data up to the point of restart are not saved, problem advancement time is reset to zero, and the RESTRT file will contain information as if this problem type were NEW.

Some cautions should be observed when the problem advancement time is changed by changing the problem option from STDY-ST to TRANSNT, or vice versa, or the problem advancement time is reset through W1 on Card 200, or the problem advancement time is reset to 0.0 using the reset time flag word on this card (Card 103). Any of these could be specified at restart. When the advancement time is changed, the user is responsible for ensuring that models involving problem time will operate as intended. Affected models include trips using advancement time, control systems using time as an operand (does not include differentiation or integration with respect to time), and table lookup and interpolation using time as the independent variable. If necessary, trips, control systems, general tables, time-dependent volumes, time-dependent junctions, and pump speed tables can all be reentered at restart. With normal modeling practices, little use of modeling features involving advancement time is needed for runs to steady-state and accordingly little effort should be needed in switching from STDY-ST to TRANSNT. Because of the frequent use of time in logic to initiate failures as part of safety systems and in establishing the delay times allowed in most table lookup and interpolation tables, required changes to a transient run may be extensive.

The program does make a change to delay control components when the advancement time is changed. The delay control component operates by maintaining a tabular past history of the delayed functions and using table lookup and interpolation to evaluate the delayed function. The table consists of pairs of time values and the delayed function. When the problem time is changed, the time values in the history table and the time value to store the next point in the table are modified by adding the difference of the new advancement time and the old advancement time. The modified history table is as if the problem being restarted was run with the new advancement time. This may not be the desired change, and, in that case, the user can reenter the delay component.

W1(I) Restart number. This must be a number printed in one of the restart print messages in the output file and whose associated restart information is stored in the RESTRT file. If -1 is specified, the last restart dump from the RESTRT file is used. If the problem type (W1 on Card 100) is STRIP, this number must be 0.

or

W1(R) Restart time (s). This can be used with problem type RESTART only (W1 of Card 100). It must be a time that can be calculated from W3 and W7 on Cards 201 through 299 and whose associated restart information is stored in the RESTRT file. W1 must be within 1.0×10^{-7} s of the restart time in the RESTRT file. The time for each restart is also printed in one of the restart print messages. If -1.0 is specified, the last restart dump from the RESTRT file is used.

W2(A) Format flag. This optional flag indicates the plot file format. It has no effect on the restart file which is always written in uncompressed machine dependent binary. There are three distinct values and two allowable obsolete values (kept for backwards compatibility). ASCII specifies the plot file will be written in ASCII. BINARY specifies the plot file will be in XDR binary, and is the default value. MBINARY specifies the plot file will be in machine dependent binary. NCMPRESS and CMPRESS mean the same as BINARY. If W2 is not specified, its value defaults to BINARY.

W3-12(A) Base name for both the restart and plot files. This optional alphanumeric entry can be used to enter the single base name for both files. Up to eighty characters may be entered as one alphanumeric field for the base name. The only difference between the plot and restart file names will be the file extension. The plot file extension will be “plt” while the restart file will have “r” as its extension. If these fields are not specified, the default file name for the restart file is restrt, the default name for the plot file is plotfl. This may be overridden by using the -r and -p options on the command line respectively. Either the default name, the name from the command field, or the name from this field on a previous case may be overridden by this field.

also

W?(A) Reset time flag. If the word RESET is the last word on this card, the problem time is reset to 0.0, This word can be W2, W3, W4, W5, W6, W7, W8, W9, W10, W11, W12, or W13, depending on whether the compress flag (W2) and restart file name (W3-W12) are used.

2.7 Card 104, Restart and Plot Output File Control

This card can be entered for NEW, NEWATH, RESTART, and STRIP options. For the strip option, this card controls the strip file, overrides the 100 card format specification, and the NONE option is not allowed. If this card is omitted, the restart file is rewound at the end of the problem, but no further action is taken. The user may need to provide system control cards to dispose of the file. To prevent the restart and plot files from being written, a card with NONE must be entered.

Multiple strip cases are not allowed in a single input deck. For non-strip, multiple-case input decks, where a slash (/) card is used as a case terminator between cases, a separate 104 card should be used for each case and the name for the restart and plot files (Words 2-11 on the 104 card) should be different from one case to the next. If the name for the restart and plot files (Words 2-11 on the 104 card) happens to be the same for some of the cases, the only data present on the restart and plot files of the repetitive name will be the information from the final case that used the repetitive name. If the 104 card is missing from one of the cases, the restart and plot information of this case will replace the restart and plot files from the previous case that has a 104 card. If there is no 104 card for any of the cases, only the restart and plot information for the last case in the input deck will appear in the default restart and plot files, namely restrt and plotfl.

This is discussed further in Volume V, Section 4.1.5.

W1(A) Action. This word is required. Enter one of the following: NONE, ASCII, BINARY, MBINARY, NCMPRESS, or CMPRESS. If this word is NONE, no restart or plot file will be written. If this word is ASCII, the plot or strip file will be written in ASCII format. If this word is BINARY, the plot file will be written in XDR format. Currently, STRIP files cannot be written in XDR format. For STRIP files, this results in an ASCII format. If this word is MBINARY, the plot or strip file will be written in machine dependent binary format. The word NCMPRESS is obsolete and defaults to BINARY, allowed only in NEW problems. The word CMPRESS is obsolete and defaults to BINARY, allowed only in NEW problems. In RESTART problems, this information is entered on the 103 card.

W2-11(A) Name for the restart file and base name for the plot file. This optional alphanumeric entry can be used to enter the name of the restart file. The plot file will have the same base name with the extension (if there is one) removed and replaced with the ".plt" extension. Up to eighty characters may be entered as one alphanumeric field. (The code internally treats the field as up to ten eight-character words.) The default file names for the restart and plot files are restrt and plotfl respectively. This may be overridden on UNIX and Linux machines on the command line by using the -r option for restart file name and the -p option for the plot file. Either the default name, the name from the command field, or the name from this field on a previous case may be overridden by this field. This information may be entered only in NEW problems. In RESTART problems, this information is entered on the 103 card.

2.8 Card 105, CPU Time Remaining and Diagnostic Edit/Dump

This card is optional. Card 105 controls termination of the transient advancement based on the CPU time remaining for the job; it also controls the diagnostic edit option. Some operating systems allow specification of the CPU time allocated for a job as part of the job control language and also provide a means to determine the CPU time remaining during job execution. As an alternative, Word 3 of this card may be entered as the CPU time allocated. An alternative CPU remaining time is computed by decrementing this quantity by the CPU time used as measured by the program. If Word 3 is omitted or zero, the alternative CPU remaining time is assumed infinite. At the end of each time step, the CPU time remaining for the job is determined from the minimum of the system (if available) and alternative CPU remaining times. If the remaining CPU time is less than Word 1, the transient is immediately terminated. The advancement may not be at the end of a requested time step due to time step reduction; the hydrodynamic, heat conduction, and reactor kinetics may not be advanced to the same point; or the advancement may not be successful and the advancement is scheduled to be repeated with reduced time step. Major edits, minor edits, plot edits, and a restart record are forced. The transient can be restarted from this point as if the problem had not been interrupted. The transient is also terminated after successful advancement over a requested time step and the remaining CPU time is less than Word 2. Word 2 should be larger than Word 1. The default values for Words 1 and 2 are 1.0 and 2.0 seconds. The default values are used if the card is not supplied or the entered numbers are less than default values. Word 2 is also

forced to be 1.0 seconds larger than Word 1. The time values must include time for the final minor and major edits (very little time required), plotting, and any other processing that is to follow termination of RELAP5-3D© execution. Although this card is optional, we strongly recommend its use with Word 3 nonzero on systems that do not provide a system CPU limit.

This is discussed further in Volume V, Section 4.1.6.

Card 105 also controls the diagnostic edit printout through the use of Words 4 and 5. If these words are missing or zero, no diagnostic edit option is in effect. If Word 4 is greater than zero, then Word 4 is the attempted advancement count number to start a diagnostic edit, and Word 5 is the attempted advancement count number to stop the diagnostic edit as well as the calculation.

W1(R) CPU remaining limit 1 (s).

W2(R) CPU remaining limit 2 (s).

W3(R) CPU time allocated (s).

W4(I) Diagnostic edit control word as described above.

W5(I) Diagnostic edit control word as described above.

If the program is compiled with compile time option CTSS defined, entering Word 1 as 0.0 will cause no testing for CPU termination and normal CTSS termination at the end of CPU time can occur. In this case, the problem can be restarted.

2.9 Card 106, R5FORCE File Control

This card can be entered for NEW and RESTART options. If this card is omitted, NONE is assumed for W1.

W1(A) Action. This word may not be blank. If this word is NONE, no R5FORCE file is written. Currently, the use of any other entry for this word will force a R5FORCE file to be written.

W2-11(A) R5FORCE file name. This optional alphanumeric entry can be used to enter the file name of the R5FORCE file. Up to eighty characters may be entered as one alphanumeric field. (The code internally treats the field as up to ten eight-character words.) The default file name for the R5FORCE files is r5-r5f. This may be overwritten on UNIX and LINUX machines by using the -F option on the command line. Either the default name or the name from the command line may be overwritten by this field. This information can be entered on NEW or RESTART problems. For RESTART problems, the R5FORCE data are added to the end of the R5FORCE file.

2.10 Card 107, Steady State Options

This card is optional. The values on this card are used to override the default options for steady state mode (Card 100, Word 2 is STDY-ST). Without this card, activation of trips and CHF are bypassed by default in steady state mode, and several solution control options are selected by default in steady state mode. The default steady state solution is obtained using the nearly-implicit hydrodynamic solution algorithm, the mass error time step control is bypassed, the steady state checking routine is bypassed, and the hydrodynamic and heat conduction solutions are coupled implicitly and use the same time step size. The values on this card can be used for back compatibility with earlier versions of RELAP5-3D©.

This is discussed further in Volume II, Section 7.1.2 and Volume V, Section 4.1.7.

W1(I) Trip flag. If this word is one, the trip logic is enabled in steady state mode. The default value is zero.

W2(I) CHF flag. If this word is one, CHF is enabled in steady state mode. The default value is zero.

W3(I) Solution controls flag. If this word is one, the solution controls found on the time step cards (see Cards 201-299, Word 4) are used instead of the default values (discussed above in the first paragraph of this section) for steady state mode. The default value is zero.

2.11 Card 110, Noncondensable Gas Species

This card is required for all calculations that use noncondensable gas. Nitrogen must be one of the noncondensable gas types specified on this card for any problem having accumulators. This card cannot be entered on a RESTART problem.

W1-WN(A) Noncondensable gas type. Enter any number N of words (maximum 5) of the following noncondensable gas types: ARGON, HELIUM, HYDROGEN, NITROGEN, XENON, KRYPTON, AIR, SF6, OXYGEN, CO2, or CO.

2.12 Card 115, Noncondensable Mass Fractions

Card 115 is related to Card 110. Card 115 is required if Card 110 is entered unless only one species is entered on Card 110, and then the mass fraction is set to 1.0. The number of words on Card 115 must equal the number of words on Card 110. This card cannot be entered on a RESTART problem. The sum of the mass fractions must sum to 1.0 within a relative error of 1.0×10^{-10}. The mass fractions on this card are defaults values and are used for initial conditions in the hydrodynamic volumes, unless mass fractions are entered in the hydrodynamic component data (except for the accumulator which only has nitrogen for the noncondensable species).

2.12.1 Card 115, Initial Mass Fraction for Each Noncondensable Species

W1-WN(R) Mass fraction for each noncondensable gas type.

2.13 Card 119, Gravity Constant

This card is optional and specifies the gravitational constant. If not entered, the earth gravitational constant of 9.80665 m/s^2 is used. This card is not allowed in a RESTART problem.

W1(R) Gravitational constant (m/s^2, ft/s^2). A positive number, which must be greater than or equal to 1.0×10^{-6} m/s^2 (or $3.280839895 \times 10^{-6}$ ft/s^2 if British input is used), is used as the gravitational constant. If -1.0 is entered, the earth gravitational constant is used.

2.14 Cards 120 through 129, Hydrodynamic System Control

Independent hydrodynamic systems can be described by the hydrodynamic component input. The term independent hydrodynamic systems means that there is no possibility of flow between the independent systems. A typical example would be the primary and secondary systems in a reactor where heat flows from the primary system to the secondary system in the steam generator but there is no fluid connection. If a tube rupture were modeled, the two systems would no longer be independent. Input processing lists an elevation for each volume in each independent hydrodynamic system and includes a check on elevation closure for each loop within a system. A reference volume is established for each system through input or default.

These cards are optional for each system. If not entered for a system, that system contains H_2O as the fluid unless a different fluid is specified in hydrodynamic component data, and the lowest numbered volume in each system is the reference volume. Additionally, the reference volume has a default elevation of zero. For situations where fluids other than H2O are used, one card could be entered for each individual hydrodynamic system in the model. The word “independent” implies that there is no possibility of flow between the two systems. Flow between systems using different working fluids is not allowed with RELAP5-3D©. These cards should not be entered in a RESTART problem.

This is discussed further in Volume I, Section 3.2.1; and Volume V, Section 4.1.9.

2.14.1 Hydrodynamic System Card

W1(I) Reference volume number of the system. This must be a volume in the hydrodynamic system.

W2(R) The elevation of the reference volume center relative to a fixed z-axis for the system (m, ft).

W3(A) Fluid type for the system. Enter H2O, D2O, H2, LI, K, HE, N2, NA, NAK, LIPB, NH3, H2ON, GLYCEROL, BLOOD, BIPB, H2O95, CO2, HEN, XEN, HENXEN, MS1, MS2, MS3, MS4, DOWA, or R134A. The fluid types are discussed in Volume I, Section 3.2.1; and Volume V, Section 4.1.9.

W4(A) Optional alphanumeric name of system used in output editing. *NONE* is used if this word not entered.

W5(I) System information flag. This word has the packed format g. This word is optional. If this word is not entered, g = 0 is used.

The digit g specifies whether noncondensable gas is present for this system. g = 0 specifies that noncondensable gas is present for this system. g = 1 specifies that noncondensable gas is not present for this system. If g = 1 (no noncondensable) in a system and if the digit t = 4, 5, 6, or 8 in the hydrodynamic volume component control word εbt (see Section 7 of this Appendix A), an input error will result.

2.15 Cards 140 through 147, Self-Initialization Option Control

These cards are optional, are not needed, and are only used as a cross-check on the controllers specified in Section 13. Data supplied on these cards are used to invoke the self-initialization option. These data describe which and how many of each controller will be used. To retain generality and flexibility, the self-initialization option does not require that the steady-state and nearly-implicit solution scheme options be concurrently turned on. However, this is the recommended procedure. These latter options are invoked through input data Cards 100 and 201 through 299. In addition to the data cards described below, the user must furnish data on the controllers to be used, as described in Section 13.

This is discussed further in Volume V, Section 4.1.10.

2.15.1 Card 140, Self-Initialization Control

This card specifies the number and type of controllers desired.

W1(I) Number of pump controllers.

W2(I) Number of steam flow controllers.

W3(I) Number of feedwater controllers.

2.15.2 Cards 141 through 142, Self-Initialization Pump Controller and Identification

These cards establish the relationship between the pump number and the number of the pump controller. For each pump so referenced, the user *must* use the time-dependent pump velocity option. For pump component Card CCC6100, Words 2 and 3 must be the alphanumeric and numeric parts for the

pump controller. The time-dependent pump velocity data (pump component Cards CCC6100 through CCC6199) should be input so that the search variable and pump velocity are related by a straight line through the origin with a slope of 1.

W1(I) Component number of pump number 1.

W2(I) Controller identification number for pump number 1.

W3(I) Component number of pump number 2.

W4(I) Controller identification number for pump number 2.

A maximum of six pump/controller pairs may be entered.

2.15.3 Cards 143 through 144, Self-Initialization Steam Flow Controller Identification

These cards establish the relationship between the steam flow control valve number and the steam flow controller number.

W1(I) Component number of steam flow control valve number 1.

W2(I) Controller number of steam flow controller for steam flow control valve number 1.

W3(I) Component number of steam flow control valve number 2.

W4(I) Controller number of steam flow controller for steam flow control valve number 2.

A maximum of six control valve/controller pairs may be entered. Note that in the above the valve component is assumed to be the control component. However, the user is not constrained to use a valve and may use a pump or a time-dependent junction. CAUTION: only a servo valve, a time-dependent junction, or a pump may be used, or a diagnostic error will result.

2.15.4 Cards 145 and 146, Self-Initialization Feedwater Controller Identification

These cards establish the relationship between the feedwater valve number and the feedwater controller number.

W1(I) Component number of feedwater valve number 1.

W2(I) Controller id number of the feedwater controller for feedwater valve number 1.

W3(I) Component number of feedwater valve number 2.

W4(I) Controller id number of the feedwater controller for feedwater valve number 2.

A maximum of six control valve/controller pairs may be entered. Note that in the above it is assumed that a valve component is the control component. However, the user is not constrained to use a valve and may use a pump or time-dependent junction. CAUTION: only a servo valve, time-dependent junction, or a pump is allowed, or a diagnostic will result, such as a time-dependent junction with the controller output used as the independent variable in place of time.

2.15.5 Card 147, Pressure and Volume Control Component Identification

This card identifies the component number, connection data, and pressure level for the time-dependent volume that is to provide pressure and volume control during the self-initialization null transient.

W1(I) Component number of time-dependent volume that replaces the pressurizer.

W2(I) Component number to which the above time-dependent volume is connected; CAUTION: only a single-junction is allowed or an error will result.

W3(R) Desired steady-state pressure (Pa, lb_f/in^2).

The Appendix K heat transfer models require the user to connect a heat slab to a hydro component (normally a pipe) that has the following restrictions: (a) the hydro component must be vertical with an inclination (vertical) angle of +90 degrees, (b) there must be only 1 junction connected to the bottom of the hydro component.

3 General and Kinetics Time Step Control Cards (Cards 200-299 and 2200-2299)

3.1 Card 200, Initial Time Value and User-Controlled Time Step

This card is optional. See the description of each word on this card for the default values if this card is not entered.

W1(R) Initial time. If not entered, the simulation time at the start of the advancements is zero for a NEW problem, the advancement time at the point of restart for a RESTART problem, or zero for a RESTART problem in which the problem option switches from STDY-ST to TRANSNT or vice versa. If this card is entered, the simulation time is set to the entered value, which must be greater than or equal to zero. Setting the simulation time with this entry can be done on any NEW or RESTART problem but with most applications should only be used in NEW or RESTART problems that switch from the STDY-ST or TRANSNT options. See the cautions discussed in Section 2.6 of this Appendix A for this capability. When needing to enter W2 but not wishing to enter a new initial time, enter -1.0, which is a flag to ignore this word.

W2(I) Control variable number for user-controlled time step. This word is optional. This number must be greater than or equal to 0; it must also be less than 10000. If this number is zero, it is not used. A nonzero positive number specifies a control variable whose value is used for user-specified time step control. The time step will first be determined from the maximum of the value of the control variable and the current minimum time step entered on Cards 201 through 299. The time step will then be determined from the minimum of this value and the current maximum time step (requested time step) entered on Cards 201 through 299. The time step will be equal to or less than this value, depending on the mass error, the other error checks, the material Courant limit, and the time-step reduction options (see Volume I, Section 8.1, Time Step Control).

3.2 Cards 201 through 299, Time Step Control

At least one card of this series is required for NEW problems. If this series is entered for RESTART problems, it replaces the series from the problem being restarted. This series is not used for other problem types. Card numbers need not be consecutive. This is discussed further in Volume II, Section 8.2; and Volume V, Section 4.2.

W1(R) End time for this set (s). This number must be greater than or equal to zero. This quantity must increase with increasing card number. On a first run, the end time would normally be greater than the initial time (Card 200, Word 1). The end time is allowed to be the same as the initial time. If this is the case, the code will stop at the initial time (also write a major edit to the printed output and restart and plot information to the restart and plot files) if this

is the only 201 through 299 card, and the code will continue to the end time of the last 201 through 299 card if there are more then one 201 through 299 card.

On a restart run, the end time would normally be greater than the restart time. The end time is allowed to be the same as the restart time. If this is the case, the code will stop at the restart time (also write a major edit to the printed output and restart and plot data to the restart and plot files) if this is the only 201 through 299 card, and the code will continue to the end time of the last 201 through 299 card if there are more that one 201 through 299 card.

W2(R) Minimum time step (s). This quantity must be a positive number that is less than or equal to 1.0E-6. If a larger number is entered, it is reset to 1.0E-6. If the number entered is less than or equal to 1.0E-12, an input error will result. This is discussed further in Volume V, Section 3.1.3.1 and Section 4.2.

W3(R) Maximum time step (s). This quantity is also called the requested time step. This quantity must be a positive number that is greater than or equal to W2. In transient problems (Word 2 = TRANSNT for Card 100), the user should be careful not to make this too large for the first time step. This is discussed further in Volume V, Section 3.1.3.1 and Section 4.2.

W4(I) Control option (see Section 8.2 for a discussion of this input). This word has the packed format ssdtt. It is not necessary to input leading zeros. This word must be greater than or equal to zero.

The digits ss, that represent a number from 0 through 15, are used to control the printed content of the major edits. The number is treated as a four-bit binary number. If no bits are set (i.e., the number is 0), all the standard major printed output is given. If the first bit from the right is set (i.e., ss = 1 if the other bits are not set), the heat structure temperature block is omitted. If the second bit from the right is set (i.e., ss = 2 if the other bits are not set), the second portion of the junction block is omitted. If the third bit from the right is set (i.e., ss = 4 if the other bits are not set), the third and fourth portions of the volume block are omitted. If the fourth bit from the right is set (i.e., ss = 8 if the other bits are not set), the volume and junction statistics blocks are omitted.

The digit d, which represents a number from 0 through 7, can be used to obtain extra output at every hydrodynamic time step. The number is treated as a three-bit binary number. If no bits are set (i.e., the number is 0), the standard output at the requested frequency using the maximum time step is obtained (see words 5 and 6 of this card). If the number is nonzero, output is obtained at each successful time step; and the bits indicate which output is obtained. If the first bit from the right is set (i.e., d = 1 if the other bits are not set), major edits are obtained every successful time step. If the second bit from the right is set (i.e., d = 2 if the other bits are not set), minor edits are obtained every successful time step. If the third bit from the right is set (i.e., d = 4 if the other bits are not

set), plot records are written every successful time step. These options should be used carefully, since considerable output can be generated.

The digits tt, that represent a number from 0 through 63, are used to control the time step. The number is treated as a six-bit binary number. The effect of no bits being set, i.e., 0 being entered, and the effect of each bit are first described followed by the recommended combination of bits. The steady state mode will override this. See Card 107.

If no bits are set (i.e., the number is 0), no error estimate time step control is used, and the maximum time step is attempted for both hydrodynamic and heat structure advancement. The hydrodynamic time step, however, is reduced to the material Courant limit and further to the minimum time step for cases such as water property failures. If the first bit from the right is set (i.e., tt = 1 if the other bits are not set), the hydrodynamics advancement, in addition to the time step control when no bits are set, uses a mass error analysis to control the time step between the minimum and maximum time step. If the second bit from the right is set (i.e., tt = 2 if the other bits are not set), the heat conduction/transfer time step is the same as the hydrodynamic time step; if the second bit from the right is not set, the heat conduction/transfer time step uses the maximum time step. If the third bit from the right is set (i.e., tt = 4 if the other bits are not set), the heat conduction/transfer and hydrodynamics are coupled implicitly; if the third bit from the right is not set, the heat conduction/transfer and hydrodynamic advancements are done separately and the information between the models is coupled explicitly. If the fourth bit from the right is set (i.e., tt = 8 if the other bits are not set), the nearly-implicit scheme is used to advance the hydrodynamics; if the fourth bit from the right is not set, the semi-implicit scheme is used to advance the hydrodynamics. If the fifth bit from the right is set (i.e., tt = 16 if the other bits are not set), the steady-state calculation will not be terminated by the steady-state detecting algorithm (however, there will be algorithm messages in the output file); if the fifth bit from the right is not set, the steady-state calculation will be terminated by the algorithm when it detects steady-state has been reached. If the sixth bit from the right is set (i.e., tt = 32 if the other bits are not set), the on-line algorithm selection of time migration is used to advance the hydrodynamics. The semi-implicit scheme will be used when the time step is below the Courant limit, and the nearly-implicit scheme will be used when a large time step can be taken. We do not recommend using this on-line algorithm at this time.

We recommend not using tt equal to 0 except for special testing situations. The use of tt equal to 1 is possible if the maximum time step is kept sufficiently small to ensure that the explicit connection between the heat conduction/transfer and hydrodynamics calculations remains stable. If there is any doubt, use tt equal to or greater than 3 (sets first bit and second bit). Using tt equal to 3 or 11 specifies the semi-implicit or the nearly-implicit advancement scheme, respectively, with both schemes using time step control, the heat conduction and hydrodynamics use the same time step, and the heat conduction/transfer and hydrodynamics are advanced separately. Using tt equal to 7 or 15 specifies the same features as tt equal to 3 or 11 and, in addition, specifies the implicit advancement of the

heat conduction/transfer with the hydrodynamics. The nearly-implicit scheme is suitable for a steady-state and/or self-initialization case problem where the time step is limited by the material Courant limit. The nearly-implicit scheme can also be used during slower phases of a transient problem, though we advise the user that the answers may change somewhat from the semi-implicit scheme answers (depending on the time step size). This is because the nearly-implicit has more implicit terms in the hydrodynamics than the semi-implicit scheme. The nearly-implicit advancement scheme is still under validation (assessment); most of the validation (assessment) for the code has been done with the semi-implicit advancement scheme. We did not recommend use of the implicit coupling of the heat conduction/transfer and hydrodynamics in prior versions since the implicit coupling was only partially implemented. With the implicit coupling now complete, we encourage option tt equal to 7 or 15 be used. Users should be cautioned that the implicit coupling is a recent addition to RELAP5-3D© and is still under validation (assessment). When using the implicit coupling, the heat conduction/transfer time step must be the same as the hydrodynamic time step (set the second bit from the right, i.e., add 2). If this bit is not set when implicit coupling is selected, the code will issue a warning message and set the bit. In steady-state calculations, setting the fifth bit from the right (adding 16) for the early part of the run can ensure the calculation runs to a user-specified time; then, setting the fifth bit off can allow the steady-state convergence to test control the termination of the problem. The use of the on-line algorithm selection of time migration (adding 32) is currently not recommended. There are some flaws in the logic which are under investigation.

W5(I) Minor edit and plot frequency. This word must be greater than zero. This is the number of maximum (requested) time advances per minor edit to the printed output and write of plot information to the plot file.

W6(I) Major edit frequency. This word must be greater than zero. This is the number of maximum (requested) time-advances per major edit to the printed output.

W7(I) Restart frequency. This word must be greater than zero. This is the number of maximum (requested) time-advances per write of restart information to the restart file.

3.3 Card 2200, Kinetics Time Step Control

This card is optional. If this card is present, then at least one card from the 2201-2299 cards must be entered. Only the first word of card 2200 is required if the card is present; default values will be used for the remaining words if they are excluded. If this card is not present, then the 2201-2299 cards should not be entered. In this case, the thermal-hydraulics and kinetics advancements will be locked and the time step size will be determined based on the 201-299 cards.

W1(I) Kinetics time step control option. Currently, the only acceptable option for this word is 0, which indicates that manual kinetics time control logic will be utilized. In the future, a value of 1 could be used to specify automatic kinetics time step control logic.

W2(I) Kinetics time step format. There are two options for this input. A value of 0 indicates that absolute time step sizes (s) will be entered on cards 2201-2299. A value of 1 indicates that a time step ratio equivalent to the target kinetics time step size divided by the target thermal-hydraulics time step size will be entered on cards 2201-2299. The default value for the time step format is 0 (absolute time step sizes).

W3(I) Trip unit for locking time steps. This input specifies a trip unit number that locks the kinetics and thermal-hydraulics time steps when the trip is set, and reverts back to the 2201-2299 cards when the trip is not set. The default value for the locking trip unit is 0.

W4(I) Trip unit for unlocking time steps. This input specifies a trip unit number that unlocks the kinetics and thermal-hydraulics time steps when the trip is set AND the time steps were previously locked by the trip from W3. The default value for the unlocking trip unit is 0.

The combination of W3 and W4 is useful for cases such as scram where the time steps need to be locked during a period of rapid change, and then can revert back to asynchronous advancement after the period of rapid change is complete. Note that if W3 is set to 0, this word has no meaning and should also be set to 0.

W5(I) Control variable unit number returning time step size. The return value from the control variable should always be absolute time step size (s), regardless of the value of W2. In addition, if a value of 0.0 is returned from the control variable, then the time steps will be locked, and if a value of -1.0 is returned, then the time step control from the 2201-2299 cards will be utilized. The default value for the control variable is 0.

This input provides the user with much greater control and flexibility; however, it should be used with caution since there will be a delay before the kinetics time step size will be modified. This is due to the fact that (1) change to the kinetics time step size occurs during the kinetics advancement, (2) the control variables are not updated until the end of the RELAP5-3D transient control loop, after the kinetics advancement has occurred, and (3) the kinetic timestep may be larger than the thermal-hydraulic time step so the kinetics advancement may not happen every time through the transient control loop. Thus, it is possible that a change in a control variable may not be registered for 2-3 time steps after the original signal change was made. Any use of control variables for controlling the kinetics time step size should take this into account. In addition, it should be noted that the trip signal received from the trip unit input on W3 will override any control variable value until the trip from W4 unlocks the time steps.

W6(I) Flux extrapolation option. There are currently two options for the flux extrapolation. If W6 is 0, then no extrapolation of the flux will be performed. If W6 is 1, then exponential flux extrapolation will be performed. The default for this option is 0.

The flux extrapolation is performed only when the current thermal-hydraulics advancement is ahead of the current kinetics advancement and the next planned kinetics advancement will not occur until after the current thermal-hydraulics advancement. If there are multiple thermal-hydraulics advancements between kinetics advancements, then each T/H step will utilize extrapolated fluxes for computing the power deposited in the heat-structure and/or fluid. It should be noted that no extrapolation is used for thermal-hydraulic feedback to the kinetics. The code will use the most recent T/H data prior to or at the current kinetics time step, and the T/H condition is assumed constant over the time step.

W7(I) Time step data print flag. There are currently two options for this print flag. If W7 is 0, then the asynchronous time step data will not be printed. If W7 is 1, then the asynchronous time step data will be written to a file whose name is based on the input filename with extension *.dtk (if ‘indta’ is used for the input file name, then the time step data will be written to ‘dtkdata’). The default value for this print option is 0.

3.4 Cards 2201 through 2299, Kinetics Time Step Data

These cards provide the kinetics time step information and at least one card must be entered if Card 2200 is present. These cards should not be entered if Card 2200 is absent.

W1(R) Kinetics end time for this set (s). This number must be greater than or equal to zero. This quantity must increase with increasing card numbers, and the final end time value for the 2201-2299 cards must be the same as the final end time on the 201-299 cards.

W2(R) Target kinetics time step size (s) or ratio (-). If W2 on Card 2200 is 0, then input absolute time step sizes (s) here. If W2 on Card 2200 is 1, then input a ratio equivalent to the target kinetics time step size divided by the target thermal-hydraulics time step size from W3 on Cards 201-299. If the absolute time step size or ratio entered here is set to 0.0, then the code will lock the kinetics and thermal-hydraulic time steps until the end time on this card set is reached.

4 Cards 301 through 399, Minor Edit Requests

These cards are optional for NEW and RESTART problems, are required for a REEDIT problem, and are not allowed for PLOT and STRIP problems. PLOT is not functional, and REEDIT has not been implemented. If these cards are not present, no minor edits are printed. If these cards are present, minor edits are generated, and the order of the printed quantities is given by the card number of the request card. One request is entered per card, and the card numbers need not be consecutive. For RESTART problems, if these cards are entered, all the cards from the previous problem are deleted.

W1(A) Variable request code (alphanumeric).

W2(I) Parameter (numeric).

Words 1 and 2 form the variable request code and parameter pair. The variable request code quantities that can be edited and the input required are listed below. These quantities can be used in plotting requests, in trip specifications, as search variables in tables, and as operands in control statements. Units for the quantities are also given. Quantities compared in variable trips must have the same units (if neither quantity is a control variable), and input to tables specified by variable request codes must have the specified units. The quantities are listed in alphabetical order within each section. Although the variable request code quantities in the following sections are shown in upper case, they must be entered in lower case in RELAP5-3D© input decks.

The underlined quantities without an asterisk in Section 4.1 through Section 4.10 are always written to the plot file (PLOTFL). Underlined quantities followed by an asterisk have only some of the quantities written to the plot file and the text will indicate which quantities are written. The quantities that are not underlined or some of the quantities underlined that are followed with an asterisk are written to the plot file only if requested on a 2080XXXX card as described in Section 4.15.

These cards are discussed further in Volume II, Section 8.3.3; and Volume V, Section 4.3.1.

4.1 General Quantities

The quantities listed below are unique to the whole problem or to a particular system in the whole problem. The parameter required is indicated for each variable code.

Code	Quantity
COUNT	Current attempted advancement count number. The parameter is 0.
CPUTIME	Current CPU time for this problem (s). The parameter is 0.
DT	Current time step (s). The parameter is 0.
DTCRNT	Current Courant time step (s). The parameter is 0.

EMASS Estimate of mass error in all the systems (kg, lb_m). The parameter is 0.

ERRMAX Current estimate of the truncation mass error fraction for all the systems. The parameter is 0. This is the maximum of the two types of computed mass error (ε_m or ε_{rms}) discussed in Volume I, Section 8.

NULL Specifies null field. Allowed only on trip cards. The parameter is 0.

STDTRN Steady-state/transient flag. The parameter is 0. For steady-state, the value is 0.0. For transient, the value is 1.0.

TESTDA The array testda, of twenty quantities [real testda(20)], has been defined for the convenience of program developers. This entry with a parameter ranging from 1 through 20 selects testda(parameter). The testda array is initially set to zero, and programming must be inserted to set testda values. The usual purpose of this capability is to allow a simple method for debug information to be printed in minor edits or to be plotted.

TIME Time (s). The parameter is 0. This request cannot be used for minor edit requests.

TMASS Total mass of liquid, vapor, and noncondensable gases in all the systems (kg, lb_m). The parameter is 0.

4.2 System Quantities

The quantities listed below are unique to a particular computational system in the user's input model. The parameter is indicated for each quantity.

LEVHGT Height of two-phase level above bottom of level stack for the mixture level tracking model (m, ft). The parameter is nss where n is the system number and ss is the level stack index in the system, which can be found on the printout after initialization.

LEVVEL Two-phase level velocity for the mixture level tracking model (m/s, ft/s). This velocity is independent of the local orientation of the volume (up or down). This velocity is positive if the level is rising with respect to the world (inertial fixed) coordinates; this velocity is negative if the level is falling with respect to the world (inertial, fixed) coordinates. The parameter is nss where n is the system number and ss is the level stack index in the system, which can be found on the printout after initialization.

LEVVDA Void fraction above two-phase level for the mixture level tracking model. The parameter is nss where n is the system number and ss is the level stack index in the system, which can be found on the printout after initialization.

LEVVDB Void fraction below two-phase level for the mixture level tracking model. The parameter is nss where n is the system number and ss is the level stack index in the system, which can be found on the printout after initialization.

LEVVNM Volume number of the volume containing the two-phase level for the mixture level tracking model. The parameter is nss where n is the system number and ss is the level stack index in the system, which can be found on the printout after initialization.

SYSMER Estimate of mass error in system n (kg, lb_m). The parameter is system number n.

SYSMERB Estimate of mass error for boron in system n (kg, lb_m). The parameter is system number n.

SYSMERF Estimate of mass error for liquid in system n (kg, lb_m). The parameter is system number n.

SYSMERG Estimate of mass error for vapor and noncondensable gases in system n (kg, lb_m). The parameter is system number n.

SYSMERN Estimate of mass error for noncondensable gases in system n (kg, lb_m). The parameter is system number n.

SYSTMC Continuity-equation mass for both phases and noncondensable gases in system n (kg, lb_m). The parameter is system number n.

SYSTMBC Continuity-equation mass of boron in system n (kg, lb_m). The parameter is system number n.

SYSTMFC Continuity-equation mass of liquid in system n (kg, lb_m). The parameter is system number n.

SYSTMGC Continuity-equation mass of vapor and noncondensable gases in system n (kg, lb_m). The parameter is system number n.

SYSTMNC Continuity-equation mass of noncondensable gases in system n (kg, lb_m). The parameter is system number n.

SYSTMS Total mass of liquid, vapor, and noncondensable gases in system n (kg, lb_m). The parameter is system number n.

SYSTMBS State-equation mass of boron in system n (kg, lb_m). The parameter is system number n.

SYSTMFS State-equation mass of liquid in system n (kg, lb_m). The parameter is system number n.

SYSTMGS State-equation mass of vapor and noncondensable gases in system n (kg, lb_m). The parameter is system number n.

SYSTMNS State-equation mass of noncondensable gases in system n (kg, lb_m). The parameter is system number n.

4.3 Component Quantities

The quantities listed below are unique to certain components; for example, a pump velocity can only be requested for a pump component. The parameter is the component number, i.e., the three-digit number CCC used in the input cards.

Code	Quantity
ACPGTG	Accumulator vapor/gas specific heat, C_p, at vapor/gas temperature (J/kg•K, Btu/lb_m•^oF).
ACPNIT	Accumulator noncondensable specific heat, C_p, at vapor/gas temperature (J/kg•K, Btu/lb_m•^oF).
ACQTANK	Total energy transport to the vapor/gas by heat and mass transfer in the accumulator (W, Btu/s).
ACRHON	Accumulator noncondensable density (kg/m^3, lb_m/ft^3).
ACTTANK	Mean accumulator tank wall metal temperature (K, ^oF).
ACVDM	Vapor/gas volume in the accumulator tank, standpipe, and surge line (m^3, ft^3).
ACVGTG	Accumulator vapor/gas specific heat, C_v, at vapor/gas temperature (J/kg•K, Btu/lb_m•^oF).
ACVLIQ	Liquid volume in the accumulator tank, standipipe, and surge line (m^3, ft^3).
AHFGTF	Accumulator heat of vaporization at liquid temperature (J/kg, Btu/lb_m).
AHFGTG	Accumulator heat of vaporization at vapor/gas temperature (J/kg, Btu/lb_m).
AHFTG	Accumulator liquid specific enthalpy at vapor/gas temperature (J/kg, Btu/lb_m).
AHGTF	Accumulator vapor/gas specific enthalpy at liquid temperature (J/kg, Btu/lb_m).
AVGTG	Accumulator specific volume at vapor/gas temperature (m^3/kg, ft^3/lb_m).
AVISCN	Accumulator noncondensable viscosity (kg/m•s, lb_m/ft•s).
BETAV	Accumulator vapor saturation coefficient of expansion (K^{-1}, $^oF^{-1}$).
CDIM	General Electric (GE) mechanistic dryer critical inlet moisture quality.

CPREFF Thermodynamic efficiency in the compressor component.

CPRHEAD Head in the compressor component (Pa, lb_f/in^2).

CPRMT Motor torque in the compressor component (N•m, lb_f•ft^2).

CPRNRT Inertia in the compressor component (kg•m^2, lb_m•ft^2).

CPRTRQ Sum of hydraulic torque and frictional torque in the compressor component (N•m, lb_f•ft).

CPRVEL Rotational velocity in the compressor component (rad/s, rev/min).

DIM General Electric (GE) mechanistic dryer inlet moisture quality.

DMGDT Accumulator/time rate of change in dome vapor/gas mass (kg/s, lb_m/s).

GAMASP Enhanced interfacial condensation rate due to spray impingement on the interface in the pressurizer component (kg/m^3•s, lb_m/ft^3•s).

GDRY General Electric (GE) mechanistic dryer capacity factor.

OMEGA Inertial valve disk angular velocity (rad/s, rev/min).

PMPHEAD Head in the pump component (Pa, lb_f/in^2).

PMPMT Motor torque in the pump component (N•m, lb_f•ft).

PMPNRT Inertia in the pump component (kg•m^2, lb_m•ft^2).

PMPTRQ Sum of hydraulic torque and frictional torque in the pump component (N•m, lb_f•ft).

PMPVEL Rotational velocity in the pump component (rad/s, rev/min).

PRZLVL Pressurizer collapsed liquid level (m, ft).

THETA Inertial valve disk angular position (degrees).

TUREFF Efficiency of the turbine component.

TURPOW Power developed in the turbine component (W, Btu/s).

TURTRQ Torque developed in the turbine component (N•m, lb_f•ft).

TURVEL Rotational velocity of the turbine component (rad/s, rev/min).

VLVAREA Ratio of the current valve physical area to the junction area. The junction area is the fully open valve physical area for the smooth area option and the minimum of the two connecting volumes for the abrupt area change.

VLVSTEM Ratio of the current valve stem position to the fully open valve stem position for the motor and servo valves when the normalized valve stem position option is used. For the motor and servo valves when the normalized valve area option is used and for all the other valves, this is the ratio of the current valve physical area to the fully open valve physical area.

VOLSTEM Normalized volume of computational volume for variable volume model.

XCO General Electric (GE) mechanistic separator liquid carryover quality.

XCU General Electric (GE) mechanistic separator vapor/gas carryunder quality.

XI General Electric (GE) mechanistic separator inlet quality.

4.4 Volume Quantities

For most of the following quantities, the parameter is the volume number, i.e., the nine-digit number printed in the major edit. The parameter is CCC010000 for a single-volume; CCC010000 for a time-dependent volume; CCCXX0000 for a volume in a pipe, annulus, or pressurizer component ($01 \leq XX \leq 99$); CCC010000 for the volume in a branch, separator, jetmixer, turbine, feedwater heater, or ECC mixer component; CCC010000 for the volume in a pump or compressor component; CCC010000 for the volume in an accumulator component; and CCCXYYZZ0 for a volume in a multid component ($1 \leq X \leq 9$, $01 \leq YY \leq 99$, $01 \leq ZZ \leq 99$). Some of the quantities are not set for an accumulator component. Some of the quantities are associated with the coordinate directions in the volume, and these quantities are computed for each coordinate direction in use. The parameter for the coordinate direction-related quantities is the volume number plus F, where F is described below. The quantities requiring the volume number plus F are so identified.

Every volume has at least one coordinate direction, and some volumes may have up to three orthogonal coordinate directions. Each coordinate has an inlet face and an outlet face. Faces are numbered 1 through 6, where faces 1 and 2 are the inlet and outlet faces associated with coordinate 1 (x or r), respectively, faces 3 and 4 are inlet and outlet faces associated with coordinate 2 (y or θ), and faces 5 and 6 are inlet and outlet faces associated with coordinate 3 (z). All volumes use coordinate 1. The quantity F to be added to the volume number to form the parameter used with coordinate direction related quantities is 0 or the face number. When F is 0 (i.e., just the volume number), 1, or 2, the volume velocity is for coordinate 1. When F is 3 or 4, the volume velocity is for coordinate 2, and when F is 5 or 6, the volume velocity is for coordinate 3. For the underlined quantities followed by an asterisk in the list below, the coordinate-dependent quantities for coordinate 1 are automatically written to the plot records using the

parameter with F equal to 0. The other coordinate-dependent quantities can be written to the plot records using the 2080XXXX card series described in Section 4.15. Input checks are made to ensure the parameter specifies a volume coordinate direction that is in use.

Code	Quantity
ALLVOLS	When entered on a 2080XXXX card with a -1 for the parameter, ALL the volume data will be written to the plot file. Useful when debugging. Use carefully since a large plot file can be generated. It cannot be used as a minor edit variable.
AVOL	Volume area of the volume (m^2, ft^2); the parameter is the volume number plus F.
BETAFF	Volume liquid isobaric coefficient of thermal expansion, β_f, bulk conditions (K^{-1}, $^oF^{-1}$).
BETAGG	Volume vapor/gas isobaric coefficient of thermal expansion, β_g, bulk conditions (K^{-1}, $^oF^{-1}$).
BORON	Volume spatial boron density, ρ_b (kg/m^3, lb_m/ft^3). This is the volume liquid fraction (α_f) times the liquid density (ρ_f) times the boron concentration (C_b). Boron concentration is used for hydrodynamic input, and boron spatial density is used for minor edits and plots.
CSUBPF	Volume liquid specific heat, C_{pf}, bulk conditions (J/kg•K, Btu/lb_m•^oF).
CSUBPG	Volume vapor/gas specific heat, C_{pg}, bulk conditions (J/kg•K, Btu/lb_m•^oF).
DRFDP	Volume partial derivative of ρ_f with respect to pressure (s^2/m^2, s^2/ft^2).
DRFDUF	Volume partial derivative of ρ_f with respect to U_f ($kg•s^2/m^5$, $lb_m•s^2/ft^5$).
DRGDP	Volume partial derivative of ρ_g with respect to pressure (s^2/m^2, s^2/ft^2).
DRGDUG	Volume partial derivative of ρ_g with respect to U_g ($kg•s^2/m^5$, $lb_m•s^2/ft^5$).
DRGDXA	Volume partial derivative of ρ_g with respect to X_n (kg/m^3, lb_m/ft^3).
DTDP	Volume partial derivative of T^s with respect to pressure (K/Pa, in^2•$^oF/lb_f$).
DTDUG	Volume partial derivative of T^s with respect to U_g (s^2•K/m^2, s^2•$^oF/ft^2$).
DTDXA	Volume partial derivative of T^s with respect to X_n (K, ^oF).

DTFDP Volume partial derivative of T_f with respect to pressure (K/Pa, $in^2 \cdot {}^oF/lb_f$).

DTFDUF Volume partial derivative of T_f with respect to U_f ($s^2 \cdot K/m^2$, $s^2 \cdot {}^oF/ft^2$).

DTGDP Volume partial derivative of T_g with respect to pressure (K/Pa, $in^2 \cdot {}^oF/lb_f$).

DTGDUG Volume partial derivative of T_g with respect to U_g ($s^2 \cdot K/m^2$, $s^2 \cdot {}^oF/ft^2$).

DTGDXA Volume partial derivative of T_g with respect to X_n (K, ^oF).

FLOREG Volume flow regime number; the parameter is the volume number. A chart showing the meaning of each number is shown in Section 2 of this volume of the manual.

FWALF Volume liquid wall frictional drag coefficient ($kg/m^3 \cdot s$, $lb_m/ft^3 \cdot s$); the parameter is the volume number plus F.

FWALG Volume vapor/gas wall frictional drag coefficient ($kg/m^3 \cdot s$, $lb_m/ft^3 \cdot s$); the parameter is the volume number plus F.

GAMMAC Volume mass transfer rate per unit volume at the vapor/liquid interface in the boundary layer near the wall for condensation ($kg/m^3 \cdot s$, $lb_m/ft^3 \cdot s$).

GAMMAI Volume mass transfer rate per unit volume at the vapor/liquid interface in the bulk fluid for vapor generation/condensation ($kg/m^3 \cdot s$, $lb_m/ft^3 \cdot s$).

GAMMAW Volume mass transfer rate per unit volume at the vapor/liquid interface in the boundary layer near the wall for vapor generation ($kg/m^3 \cdot s$, $lb_m/ft^3 \cdot s$).

HGF Volume direct heating heat transfer coefficient per unit volume ($W/m^3 \cdot K$, $Btu/s \cdot ft^3 \cdot {}^oF$). This quantity is not set for an accumulator component.

HIF Volume liquid side interfacial heat transfer coefficient per unit volume ($W/m^3 \cdot K$, $Btu/s \cdot ft^3 \cdot {}^oF$). This quantity is not set for an accumulator component.

HIG Volume vapor/gas side interfacial heat transfer coefficient per unit volume ($W/m^3 \cdot K$, $Btu/s \cdot ft^3 \cdot {}^oF$). This quantity is not set for an accumulator component.

HSTEAM Volume vapor specific enthalpy at bulk conditions using partial pressure of vapor (J/kg, Btu/lb_m).

HVMIX Total volume liquid and vapor/gas specific enthalpy (J/kg, Btu/lb_m).

KAPPAF Volume liquid isothermal compressibility, κ_f, bulk conditions (Pa^{-1}, in^2/lb_f).

KAPPAG Volume vapor/gas isothermal compressibility, κ_g, bulk conditions (Pa^{-1}, in^2/lb_f).

P Volume pressure (Pa, lb_f/in^2).

PECLTV Volume liquid Peclet number.

PPS Vapor partial pressure (Pa, lb_f/in^2).

Q Total volume heat source from the wall and direct moderator heating to liquid and vapor/gas (W, Btu/s). This variable request is the same as Q.wall.tot. in the major edits.

QUALA Total volume noncondensable mass fraction.

QUALAN1 Volume noncondensable gas mass fraction for the first species identified on Card 110.

QUALAN2 Volume noncondensable gas mass fraction for the second species identified on Card 110.

QUALAN3 Volume noncondensable gas mass fraction for the third species identified on Card 110.

QUALAN4 Volume noncondensable gas mass fraction for the fourth species identified on Card 110.

QUALAN5 Volume noncondensable gas mass fraction for the fifth species identified on Card 110.

QUALE Volume equilibrium quality used in the wall heat transfer. This quality uses phasic enthalpies and mixture enthalpy, with the mixture enthalpy calculated using the flow quality.

QUALS Volume static quality.

QWG Volume heat source from the wall and direct moderator heating to vapor/gas (W, Btu/s). This variable request is the same as Qwg.wall.gas. in the major edits.

RHO Volume total density (kg/m^3, lb_m/ft^3).

RHOF Volume liquid density (kg/m^3, lb_m/ft^3).

RHOG Volume vapor/gas density (kg/m^3, lb_m/ft^3).

RHOM Total volume density for the mass error check (kg/m^3, lb_m/ft^3).

SATHF Volume liquid specific enthalpy at saturation conditions using partial pressure of vapor (J/kg, Btu/lb_m). This quantity is not set for an accumulator component.

SATHG Volume vapor specific enthalpy at saturation conditions using partial pressure of vapor (J/kg, Btu/lb_m). This quantity is not set for an accumulator component.

SATTEMP Volume saturation temperature based on the partial pressure of vapor (K, ^oF).

SIGMA Volume surface tension (N/m, lb_f/ft).

SOUNDE Volume sound speed (m/s, ft/s). For two-phase, this is given by the homogeneous equilibrium formula. For single phase liquid and single phase vapor/gas, this is given by the homogeneous frozen formula. These formulas are shown in Volume I, Section 3.2.2 and Volume IV, Section 7, Appendix 7A.

TEMPF Volume liquid temperature (K, ^oF).

TEMPG Volume vapor/gas temperature (K, ^oF).

TFRONT Location of the thermal front in the volume (m, ft).

TGAVG Volume average vapor/gas temperature (K, ^oF). This is the sink temperature for convective heat transfer to vapor/gas. Its value is obtained from the alternate heat structure - fluid model if that model is activated or its value is equal to TEMPG if the alternate heat structure - fluid coupling model is deactivated.

THCONF Volume liquid thermal conductivity (W/m•K, Btu/s•ft •^oF).

THCONG Volume vapor/gas thermal conductivity (W/m•K, Btu/s•ft •^oF).

TIENGV Total volume internal energy (of both phases and noncondensables) in volume (J, Btu).

TMASSV Total volume mass (of both phases and noncondensables) in volume (kg, lb_m).

TMASSBV State-equation mass of boron in volume (kg, lb_m).

TMASSFV State-equation mass of liquid in volume (kg, lb_m).

TMASSGV State-equation mass of vapor and noncondensable gases in volume (kg, lb_m).

TMASSNV State-equation mass of noncondensable gases in volume (kg, lb_m).

TSATT Volume saturation temperature based on the total pressure (K, ^oF).

UF — Volume liquid specific internal energy (J/kg, Btu/lb_m).

UG — Volume vapor/gas specific internal energy (J/kg, Btu/lb_m).

VAPGEN — Total volume mass transfer rate per unit volume at the vapor/liquid interface in the bulk fluid for vapor generation/condensation and in the boundary layer near the wall for vapor generation/condensation (kg/m^3•s, lb_m/ft^3•s).

VELF* — Volume oriented liquid velocity (m/s, ft/s); the parameter is the volume number plus F.

VELG* — Volume oriented vapor/gas velocity (m/s, ft/s); the parameter is the volume number plus F.

VFRONT — Velocity of the thermal front in the volume (m/s, ft/s).

VISCF — Volume liquid viscosity (kg/m•s, lb_m/ft•s).

VISCG — Volume vapor/gas viscosity (kg/m•s, lb_m/ft•s).

VOIDF — Volume liquid fraction.

VOIDG — Volume vapor/gas fraction (void fraction).

VOIDLA — Volume void fraction above the level for the mixture level tracking model.

VOIDLB — Volume void fraction below the level for the mixture level tracking model.

VOLLEV — Volume location of the level inside the volume for the mixture level tracking model (m, ft).

VOLMAS — Continuity-equation mass of both phases and noncondensable gases in volume (kg, lb_m).

VOLMASB — Continuity-equation mass of boron in volume (kg, lb_m).

VOLMASF — Continuity-equation mass of liquid in volume (kg, lb_m).

VOLMASG — Continuity-equation mass of both vapor and noncondensable gases in volume (kg, lb_m).

VOLMASN — Continuity-equation mass of noncondensable gases in volume (kg, lb_m).

VOLMER — Estimate of mass error for both phases and noncondensable gases in volume (kg, lb_m).

VOLMERB — Estimate of mass error for boron in volume (kg, lb_m).

VOLMERF Estimate of mass error for liquid in volume (kg, lb_m).

VOLMERG Estimate of mass error for vapor and noncondensable gases in volume (kg, lb_m).

VOLMERN Estimate of mass error for noncondensable gases in volume (kg, lb_m).

VVOL Volume of the volume (m^3, ft^3).

4.5 Junction Quantities

For the following quantities, the parameter is the junction number, i.e., the nine-digit number printed in the major edit. The parameter is CCC000000 for a single-junction; CCC000000 for a time-dependent junction; CCCXX0000 for a junction in a pipe component ($01 \leq XX \leq 99$); CCCMM0000 for a junction in a branch, separator, jetmixer, turbine, or ECC mixer component ($01 < MM \leq 09$); CCC000000 for a valve junction; CCC010000 for the inlet junction in a pump component; CCC020000 for the outlet junction in a pump component; CCCIINN00 for a junction in the multiple-junction component ($01 \leq II \leq 99$, $01 \leq NN \leq 99$); CCC010000 for the junction in an accumulator component; and CCCXYYZZF for a junction in a multid component ($1 \leq X \leq 9$, $01 \leq YY \leq 99$, $01 \leq ZZ \leq 99$, F is 2, 4, or 6).

Code	Quantity
ALLJUNS	When entered on a 2080XXXX card with a -1 for the parameter, ALL the junction data will be written to the plot file. Useful when debugging. Use carefully since a large plot file can be generated. It cannot be used as a minor edit variable.
BORONJ	Junction boron density (kg/m^3, lb_m/ft^3).
C0J	Junction distribution coefficient. The 0 in C0J is the number zero and not the upper case letter O. This is the variable C_0 in Volume I of the manual.
CCFLF	Junction CCFL flag. The value is zero if the flow is not ccfl-limited, and the value is one if the flow is ccfl-limited.
CHOKEF	Junction choking flag. The value is 0 if the flow is not choked, and is 1 if the flow is choked.
DLLPZK	Junction elevation change pressure drop (from side) (Pa, lb_f/in^2).
DLLPZL	Junction elevation change pressure drop (to side) (Pa, lb_f/in^2).
DPELJ	Junction elevation change pressure drop (total) (Pa, lb_f/in^2).
DPFKJ	Junction wall friction and form loss pressure drop (total) (Pa, lb_f/in^2).

FIJ Junction interphase friction coefficient ($N \cdot s^2/m^5$, $lb_f \cdot s^2/ft^5$). This is the variable C_i in Volume I in this manual.

FJUNFT Total junction forward user input form loss coefficient for irreversible losses, including Re dependence (dimensionless).

FJUNRT Total junction reverse user input form loss coefficient for irreversible losses, including Re dependence (dimensionless).

FLENTH Total junction liquid and vapor/gas enthalpy flow rate (J/s, Btu/s).

FLENTHA Junction noncondensable gas enthalpy flow rate (J/s, Btu/s).

FLENTHF Junction liquid enthalpy flow rate (J/s, Btu/s).

FLENTHG Junction vapor/gas enthalpy flow rate (J/s, Btu/s).

FLORGJ Junction flow regime number; the parameter is the junction number. A chart showing the meaning of each number is shown in Section 2 of this volume of the manual.

FORMFJ Junction liquid abrupt area change model form loss factor (dimensionless).

FORMGJ Junction vapor/gas abrupt area change model form loss factor (dimensionless).

<u>FRICXK</u> Junction wall friction pressure drop (<u>from</u> side) (Pa, lb_f/in^2).

<u>FRICXL</u> Junction wall friction pressure drop (<u>to</u> side) (Pa, lb_f/in^2).

FWALFJ Junction non-dimensional liquid wall friction coefficient (dimensionless). The non-dimensional phasic wall friction coefficient FWALFJ represents a dimensionless friction factor times a length divided by a hydraulic diameter.

FWALGJ Junction non-dimensional vapor/gas wall friction coefficient (dimensionless). The non-dimensional phasic wall friction coefficient FWALGJ represents a dimensionless friction factor times a length divided by a hydraulic diameter.

<u>HLOSSX</u> Junction form loss pressure drop (total) (Pa, lb_f/in^2).

IREGJ Junction vertical bubbly/slug flow regime number. A chart showing the meaning of each number is shown in Section 2 of this volume of the manual.

MFLOWBJ Boron mass flow rate (kg/s, lb_m/s).

<u>MFLOWFJ</u> Junction liquid mass flow rate (kg/s, lb_m/s).

MFLOWGJ Junction vapor/gas mass flow rate (kg/s, lb_m/s).

MFLOWJ Total junction liquid and vapor/gas mass flow rate (kg/s, lb_m/s).

MFLOWNJ Noncondensable gases mass flow rate (kg/s, lb_m/s).

QUALAJ Total junction noncondensable gas mass fraction.

QUALNJ1 Junction noncondensable gas mass fraction for the first species identified on Card 110.

QUALNJ2 Junction noncondensable gas mass fraction for the second species identified on Card 110.

QUALNJ3 Junction noncondensable gas mass fraction for the third species identified on Card 110.

QUALNJ4 Junction noncondensable gas mass fraction for the fourth species identified on Card 110.

QUALNJ5 Junction noncondensable gas mass fraction for the fifth species identified on Card 110.

RHOFJ Junction liquid density (kg/m^3, lb_m/ft^3).

RHOGJ Junction vapor/gas density (kg/m^3, lb_m/ft^3).

SONICJ Junction sound speed (m/s, ft/s). When not choked, this is the upstream volume sound speed (see volume minor edit request SOUNDE in Volume II, Appendix A, Section 4.4 of the manual). When choked, this is the throat sound speed based on the physical junction area (Ransom-Trapp model: single phase liquid given by SONIC/JCAT, two-phase and single phase vapor/gas given by a_{throat}/JCAT) (Henry-Fauske model: single phase liquid, two-phase, and single phase vapor/gas given by v_c). It includes the effect of the density ratio (JCAT) for the Ransom-Trapp model, but does not include the effects of the throat ratio (ATHROAT) and the discharge coefficients (C_D). These terms are discussed in Section 7.2, Section 7.3, and Appendix 7A of Volume IV of the manual.

TASAPK Junction temporal and spatial variation of momentum pressure drop (from side) (Pa, lb_f/in^2).

TASAPL Junction temporal and spatial variation of momentum pressure drop (to side) (Pa, lb_f/in^2).

UFJ Junction liquid specific internal energy (J/kg, Btu/lb_m).

UGJ Junction vapor/gas specific internal energy (J/kg, Btu/lb_m).

VELFJ Junction liquid velocity (m/s, ft/s). This velocity is based on the junction area A_j, which is discussed in Section 2.4 of this volume of the manual.

VELGJ — Junction vapor/gas velocity (m/s, ft/s). This velocity is based on the junction area A_j, which is discussed in Section 2.4 of this volume of the manual.

VGJJ — Junction vapor/gas drift velocity (m/s, ft/s). This is the variable v_{gj} in Volume I of the manual.

VOIDFJ — Junction liquid fraction.

VOIDGJ — Junction vapor/gas fraction (void fraction).

VOIDJ — Junction vapor/gas fraction (void fraction) used in the interphase friction.

XEJ — Junction quality. When not choked, this is the upstream static quality. When choked, this is the throat quality used in the choking model.

4.6 Heat Structure Quantities

The parameter is the seven-digit heat structure number CCCG0NN (printed in the major edit) with a two-digit number appended (thus the parameter is a nine digit number) except for the request codes HTMWPOW, HTMWRQ, HTPOWG, HTVAT, H2GEN, OXTI, and OXTO. For codes other than HTTEMP, HTPOWG, HTVAT, H2GEN, OXTI, and OXTO, the appended number is 00 for the left boundary and 01 for the right boundary. For HTTEMP, the appended number is the mesh point number [i.e., 01 for the first mesh point (left boundary), 02 for the second mesh point, ..., np for the last mesh point (right boundary)]. For HTMWPOW, HTMWRQ, HTPOWG, HTVAT, H2GEN, OXTI, and OXTO, omit the two appended digits and use only the seven digit number. Only the left and right surface mesh point temperatures (HTTEMP) are written by default in plot records on the PLOTFL file, and, thus, plot requests in plot-type problems and strip requests are limited to those temperatures unless the interior mesh point temperatures (HTTEMP) are forced to the PLOTFL file through 2080XXXX cards.

Code	Quantity
H2GEN	Heat structure hydrogen generated from the metal-water reaction model (kg, lb_m). The parameter is the seven-digit heat structure number, CCCG0NN.
HTCHF	Critical (maximum) heat flux (W/m^2, $Btu/s{\bullet}ft^2$). The parameter is the seven-digit heat structure number, CCCG0NN, with a two-digit number appended (00 for the left boundary and 01 for the right boundary). The area associated with this is the surface area of the heat structure for the specified boundary (left or right).
HTGAMW	Mass transfer rate per unit volume at the volume vapor/liquid interface in the boundary layer near this boundary (left or right) of the heat structure (wall) for vapor generation /condensation ($kg/m^3{\bullet}s$, $lb_m/ft^3{\bullet}s$). The parameter is the seven-digit heat structure number, CCCG0NN, with a two-digit number appended (00 for the left boundary and 01 for the right boundary).

HTHTC Total heat transfer coefficient for heat structure boundary ($W/m^2 \cdot K$, $Btu/s\text{-}ft^2 \cdot {}^oF$). The parameter is the seven-digit heat structure number, CCCG0NN, with a two-digit number appended (00 for the left boundary and 01 for the right boundary). See Equation (4.6-16) in Volume I, Section 4.6.1, for a description of this quantity. The area associated with this is the surface area of the heat structure for the specified boundary (left or right).

HTMODE Boundary heat transfer mode number (unitless). The mode number indicates which heat transfer regime is currently in effect. The parameter is the seven-digit heat structure number, CCCG0NN, with a two-digit number appended (00 for the left boundary and 01 for the right boundary). This same quantity is valid for the reflood heat structures. A chart showing the meaning of each number is shown in Section 3.2 of this volume of the manual.

HTMWPOW The rate of heat released due to the metal-water reaction per time step. The parameter is the seven-digit heat structure number, CCCG0NN.

HTMWRQ Total heat generated due to the metal-water reaction model. The parameter is the seven-digit heat structure number, CCCG0NN.

HTPOWG Heat generated within a heat structure (i.e., internal heat source) (W, Btu/s.). The parameter is the seven-digit heat structure number, CCCG0NN.

HTRG Heat flux due to convection to vapor/gas phase in the boundary volume (W/m^2, $Btu/s \cdot ft^2$). This does not include contributions from radiation/conduction enclosures. The parameter is the seven-digit heat structure number, CCCG0NN, with a two-digit number appended (00 for the left boundary and 01 for the right boundary). The area associated with this is the surface area of the heat structure for the specified boundary (left or right).

HTRNR Heat flux due to convection to vapor/gas phase and liquid phase in the boundary volume (W/m^2, $Btu/s \cdot ft^2$). This does not include contributions from radiation/conduction enclosures. The parameter is the seven-digit heat structure number, CCCG0NN, with a two-digit number appended (00 for the left boundary and 01 for the right boundary). The area associated with this is the surface area of the heat structure for the specified boundary (left or right).

HTTEMP* Mesh point temperature (K, ${}^oF$). The parameter is the seven-digit heat structure number, CCCG0NN, with a two-digit number appended (mesh point number). See the discussion at the beginning of this section (Section 4.6). The left and right surface mesh point temperatures are written to the plot record by default, but interior mesh point temperatures must be requested through the 2080XXXX cards.

HTVAT Heat structure volume averaged temperature (K, ${}^oF$). The parameter is the seven-digit heat structure number, CCCG0NN. See Volume II, Appendix A, Section 8.8 for a discussion of the calculation of this variable.

OXTI Heat structure oxide thickness on the inside of the cladding from the metal-water reaction model (m, ft). The parameter is the seven-digit heat structure number, CCCG0NN.

OXTO Heat structure oxide thickness on the outside of the cladding from the metal-water reaction model (m, ft). The parameter is the seven-digit heat structure number, CCCG0NN.

PECL Liquid Peclet number for the heat structure. The parameter is the seven-digit heat structure number, CCCG0NN, with a two-digit number appended (00 for the left boundary and 01 for the right boundary).

STANT Liquid Stanton number for the heat structure. The parameter is the seven-digit heat structure number, CCCG0NN, with a two-digit number appended (00 for the left boundary and 01 for the right boundary).

4.7 Reflood-Related Quantities

For the following quantities, the parameter is the heat structure geometry number, i.e., the four-digit number CCCG printed in the major edit.

Code	Quantity
FINES	Current number of axial nodes on a reflood structure.
TCHFQF	Temperature at the critical (maximum) heat flux (K, ^{o}F).
TREWET	Rewet, quench, Leidenfrost, or minimum film boiling temperature (K, ^{o}F).
ZQBOT	Elevation of bottom quench front (m, ft). This is the variable WETBOT in Section 4.4 of Volume IV of the manual.
ZQTOP	Elevation of top quench front (m, ft). This is the variable ZTOPQ in Section 4.4 of Volume IV of the manual.

4.8 Radiation/Conduction Enclosure Quantities

The parameter is the four digit number SSNN, where SS is the set number and NN is the surface number.

Code	Quantity
QRAD	Radiation/conduction enclosure heat flux for a surface (heat structure) in a set (W/m^2, Btu/s·ft^2). The area associated with this is the surface area of the heat structure for the specified boundary (left or right). The radiation enclosure heat flux is the variable Q_i in

Volume I, Section 4.13 of the manual. The conduction enclosure heat flux is the variable Q_i in Volume I, Section 4.14 of the manual.

4.9 Reactor Kinetics Quantities

The following list is for point kinetics variables. The parameter is zero for the following reactor kinetics quantities except detector response.

Code	Quantity
RDRES	Nuclear detector response. The parameter is the detector number.
RKACPOW	Total actinide decay power (W).
RKFIPOW	Total immediate (prompt and delayed neutron) fission power (W).
RKGAPOW	Total decay (fission products and actinide) power (W).
RKREAC	Reactivity (dollars).
RKRECPER	Reciprocal reactor period (s^{-1}).
RKTPOW	Total reactor power, i.e., sum of immediate (prompt and delayed neutron) fission power and decay (fission products and actinide) power (W).

The following list is for space dependent kinetics variables. The kinetics mesh consists of a user specified number of axial mesh planes with each mesh plane containing the same number of kinetics nodes. The kinetics mesh planes are numbered consecutively beginning from the bottom of the kinetics solution domain and proceeding upward to the top of the axial mesh. The kinetics nodes in an axial mesh plane are numbered consecutively starting from the upper left hand corner of the mesh plane (when viewed from the top of the kinetics mesh) and proceeding from left to right across each row of kinetics nodes in succession from the top row to the bottom row of kinetics nodes in the axial mesh plane. All nodes in the axial mesh plane are given a node number, including nodes that are not part of the kinetics solution domain (see Section 15.18.14 of this appendix). This numbering scheme holds for both Cartesian and hexagonal geometries. For Cartesian geometry, the underlying mesh is a rectangular mesh with a user specified number of rows and columns. For hexagonal geometry the underlying mesh is hexagonal with a user specified number of rings around a central node. The number of nodes on the first and subsequent rows for hexagonal geometry depends on the number of rows needed to accommodate the number of rings. The number of nodes on the first row is the number of rings plus one. Each subsequent row has one more node than the row above it down to the middle of the mesh below which the number of nodes in a row decreases by one relative to the row above it until the bottom row is reached. The bottom row of nodes has the same number of nodes as the top row of nodes. The total number of rows needed to accommodate the number of rings is twice the number of rings plus one. The middle row of nodes is numbered as the number of rings plus one. It is an error to request data from a kinetics node that is not part of the kinetics solution domain.

For some space dependent kinetics alphanumeric codes, it is possible to enter -1 for the parameter (see below) on the 2080XXXX cards. This will cause all the data for this alphanumeric variable to be written to the plot file. This option should be used carefully, since a large plot file can be generated.

Code	Parameter	Quantity
CONI	llnnnn	Iodine concentration in node nnnn on axial level ll (atoms/cm^3). Entering -1 for the parameter on the 2080XXXX Cards will cause the data for ALL llnnnn nodes to be written to the plot file.
CONPM	llnnnn	Promethium concentration in node nnnn on axial level ll (atoms/cm^3). Entering -1 for the parameter on the 2080XXXX Cards will cause the data for ALL llnnnn nodes to be written to the plot file.
CONSM	llnnnn	Samarium concentration in node nnnn on axial level ll (atoms/cm^3). Entering -1 for the parameter on the 2080XXXX Cards will cause the data for ALL llnnnn nodes to be written to the plot file.
CONXE	llnnnn	Xenon concentration in node nnnn on axial level ll (atoms/cm^3). Entering -1 for the parameter on the 2080XXXX Cards will cause the data for ALL llnnnn nodes to be written to the plot file.
RDRES	number	Nuclear detector response. The parameter is the detector number.
RKOBK	gllnnnn	Buckling in neutron group g for node nnnn on axial level ll (cm^{-2}). Entering -1 for the parameter on the 2080XXXX Cards will cause the data for ALL g groups and llnnnn nodes to be written to the plot file.
RKOBTB	ll	Bias buckling for the thermal neutron group on axial level ll (cm^{-2}).
RKOCRACF	llrrrr	Control fraction of the active portion of control rod rrrr on axial level ll.
RKOCRDCF	llrrrr	Control fraction of the driver portion of control rod rrrr on axial level ll.
RKOCRPSN	rrrr	Insertion depth of control rod rrrr (m, ft).
RKOD	gllnnnn	Diffusion coefficient for neutron group g in node nnnn on axial level (cm). Entering -1 for the parameter on the 2080XXXX Cards will cause the data for ALL g groups and llnnnn nodes to be written to the plot file.
RKOEGV	0	Eigenvalue.
RKOFIPOW	0	Total reactor immediate (prompt and delayed neutrons) fission power (W).

RKOGAPOW	0	Total reactor decay (fission products and actinide) power (W).
RKOPHI	gllnnnn	Neutron flux in neutron group g in node nnnn on axial level ll (neutrons/cm^2-s). Entering -1 for the parameter on the 2080XXXX Cards will cause the data for ALL g groups and llnnnn nodes to be written to the plot file.
RKOACPOW	0	Total reactor actinide decay power (W).
RKONDFIP	llnnnn	Fission power in node nnnn on axial level ll (W). Entering -1 for the parameter on the 2080XXXX Cards will cause the data for ALL llnnnn nodes to be written to the plot file.
RKONDFPD	llnnnn	Fission power density in node nnnn on axial level ll (W/cm^3). Entering -1 for the parameter on the 2080XXXX Cards will cause the data for ALL llnnnn nodes to be written to the plot file.
RKONDRFP	llnnnn	Relative fission power density in node nnnn on axial level ll. Ratio of immediate (prompt and delayed neutrons) fission power density in node to average fission power density. Entering -1 for the parameter on the 2080XXXX Cards will cause the data for ALL llnnnn nodes to be written to the plot file.
RKONRFP	llnnnn	Relative fission power in node nnnn on axial level ll. Ratio of immediate (prompt and delayed neutrons) fission power in node to average fission power. Entering -1 for the parameter on the 2080XXXX Cards will cause the data for ALL llnnnn nodes to be written to the plot file.
RKORECPR	0	Reciprocal reactor period (s^{-1}).
RKOSIGA	gllnnnn	Macroscopic absorption cross-section in neutron group g in node nnnn on axial level ll (cm^{-1}). Entering -1 for the parameter on the 2080XXXX Cards will cause the data for ALL g groups and llnnnn nodes to be written to the plot file.
RKOSIGF	gllnnnn	Macroscopic fission cross-section in neutron group g in node nnnn on axial level ll (cm^{-1}). Entering -1 for the parameter on the 2080XXXX Cards will cause the data for ALL g groups and llnnnn nodes to be written to the plot file.
RKOSIGS1	gllnnnn	Macroscopic scatter cross-section for scattering into neutron group g in node nnnn on axial level ll (cm^{-1}). RKOSIGS1 specifies the inscatter cross section for group g from the highest neutron energy group not equal to group g. Entering -1 for the parameter on the 2080XXXX Cards will

		cause the data for ALL g groups and llnnnn nodes to be written to the plot file.
RKOSIGS2	gllnnnn	Macroscopic scatter cross-section for scattering into neutron group g in node nnnn on axial level ll (cm^{-1}). RKOSIGS2 denotes the inscatter cross section for group g from the second highest neutron energy group not equal to group g. Entering -1 for the parameter on the 2080XXXX Cards will cause the data for ALL g groups and llnnnn nodes to be written to the plot file. This is only allowed if the number of groups is equal to 4.
RKOSIGS3	gllnnnn	Macroscopic inscatter cross-section for neutron group g in node nnnn on axial level ll (cm^{-1}). RKOSIGS3 denotes the inscatter cross section for group g from the third highest neutron energy group not equal to group g. Entering -1 for the parameter on the 2080XXXX Cards will cause the data for ALL g groups and llnnnn nodes to be written to the plot file. This is only allowed if the number of neutron energy groups is equal to 4.
RKOTPOW	0	Total reactor power, i.e., sum of immediate (prompt and delayed neutron) fission power and decay (fission products and actinide) power (W).
RKOZNALP	zzzzvv	Average void fraction in region vv of zone zzzz; only valid if RAMONA or GEN feedback selected. If RAMONA is selected, vv is omitted (-).
RKOZNBOR	zzzzvv	Average poison density in volume region vv of zone zzzz; if RAMONA feedback is selected, vv is omitted (kg/m^3, lb_m/ft^3).
RKOZNDEN	zzzzvv	Average fluid density in volume region vv of zone zzzz; only valid if HWR or GEN feedback selected (kg/m^3, lb_m/ft^3).
RKOZNFIP	zzzz	Total immediate (prompt and delayed neutrons) fission power in zone zzzz (W).
RKOZNGAP	zzzz	Total decay (fission products and actinide) power in zone zzzz (W).
RKOZNPWA	zzzz	Total actinide decay power in zone zzzz (W).
RKOZNPWK	zzzz	Total fission product decay power in zone zzzz (W).
RKOZNTF	zzzzss	Average structure temperature in structure region ss of zone zzzz; if RAMONA feedback is selected, ss is omitted (K, ^oF).
RKOZNTM	zzzzvv	Average fluid temperature in volume region vv of zone zzzz; if RAMONA feedback is used, vv is omitted (K, ^oF).

RKOZNTPW	zzzz	Total reactor power in zone zzzz (W).
USERVAR1	llnnnn	First user variable.
USERVAR2	llnnnn	Second user variable.
USERVAR3	llnnnn	Third user variable.
USERVAR4	llnnnn	Fourth user variable.

4.10 Control System Quantities

The parameter is the control component number, i.e., the three-digit number, CCC, or the four-digit number, CCCC, used in the input cards.

Code	Quantity
CNTRLVAR	Control component number. These quantities are assumed dimensionless except for a SHAFT component.

4.11 Interactive Variable Quantities

The parameter is 1000000000. The interactive variables are discussed in Section 6 of this Appendix A and can be used in batch or interactive jobs.

Code	Quantity
User-defined variable name	Value of the interactive variable (i.e., 1000000000).

4.12 Trip Quantities

The parameter is the trip number, i.e., the three-digit number NNN, or the four-digit number, NNNN, used in the input cards.

Code	Parameter	Quantity
TIMEOF	nnn or nnnn	Time of trip occurring (s). The parameter is the trip number.

4.13 General Table Quantities

The parameter is the general table number, i.e., the three-digit number TTT used in the input cards. If more than one component accesses a general table, the values stored for the general table are from the last access to the general table.

Code	Parameter	Quantity
TABLEIN	ttt	The input argument for the general table.
TABLEOUT	ttt	The general table value for the specified input argument.

4.14 Radionuclide Transport Quantities

These quantities are available if the radionuclide transport model has been activated. The radionuclide specie identifier XXXXX in the variable request code is case sensitive (i.e., may be either upper case, mixed case, or lower case). This is different from all of the other variable request codes that must be entered in lower case.

Code	Parameter	Quantity
XXXXXcon	CCCNN0000	Concentration of radionuclide specie XXXXX in volume NN of component CCC (atoms/m^3). The alphanumeric identifier XXXXX for the specie is Word 1 on Card 220MMM00 for radionuclide MMM.
XXXXXmas	CCCNN0000	Mass of radionuclide specie XXXXX in volume NN of component CCC (kg). The alphanumeric identifier XXXXX for the specie is Word 1 on Card 220MMM00 for radionuclide MMM.
XXXXXact	CCCNN0000	Decay rate of radionuclide specie XXXXX in volume NN of component CCC (disintegrations/s). The alphanumeric identifier XXXXX for the specie is Word 1 on Card 220MMM00 for radionuclide MMM.
XXXXXeng	CCCNN0000	Energy from decay of radionuclide specie XXXXX in volume NN of component CCC (W). The alphanumeric identifier XXXXX for the specie is Word 1 on Card 220MMM00 for radionuclide MMM.
rtzonphi	GZZZZ	Neutron flux-volume integral in group G of neutron kinetics zone ZZZZ $\left(\frac{\text{neutrons} \bullet \text{m}}{\text{s}}\right)$. This variable is only available if the nodal neutron kinetics model is activated.

4.15 Cards 2080XXXX, Expanded Plot Variables

The underlined variables listed in the previous sections are the default plot variables, are always written to the plot file, and are always available for plotting. The variables that are not underlined and some of the underlined variables followed by an asterisk are not written to the plot file by default and are thus unavailable for plotting unless the user enters the desired variables on 2080XXXX cards. The format of these cards is given below. They are only required for the additional variables that the user wants to have

written on the plot file. The user can specify that between 1 and 9,999 of these variables be written to the plot file.

The field XXXX need not be consecutive.

W1(A) Variable request code (alphanumeric). See the previous sections for valid variable request codes (alphanumerics).

W2(I) Parameter (numeric). Enter the parameter (numeric) associated with the variable request code (alphanumeric).

There is as option to enter card 20800000 with Word 1 set to the value of NONE. If only the 20800000 card is entered with Word 1 set to the value of NONE, and there are no 2080XXXX cards (where XXXX takes on a value between 1 and 9,999), only 6 of the default (underlined) variables in Section 4 are written to the plot file and are available for plotting (the six variables are CPUTIME, DT, DTCRNT, EMASS, TIME, and TMASS). The other default (underlined) variables in Section 4 are not written to the plot file for this case and are not available for plotting. If the 20800000 card is entered with Word 1 set to the value of NONE, and there are some 2080XXXX cards (where XXXX takes on a value between 1 and 9,999), only the 6 default (underlined) variables mentioned above and the variables on the 2080XXXX cards are written to the plot file and are available for plotting.

5 Cards 400 through 799 or 20600000 through 20620000, Trip Input Data

These cards are optional for NEW and RESTART type problems and are not used for other problem types. Two different card series are available for entering trip data, but only one series type may be used in a problem. Card numbers 401 through 799 allow 199 variable trips and 199 logical trips. Card numbers 20600010 through 20620000 allow 1,000 variable trips and 1,000 logical trips.

This is discussed further in Volume I, Section 5; Volume II, Section 4.1; and Volume V, Section 4.4.

5.1 Card 400, Trips Cancellation

This card is allowed only for RESTART problems. The card causes all trips in the problem being restarted to be deleted. Any desired trips must be reentered.

W1(A) Discard. Any other entry is an error.

5.2 Card 20600000, Trip Card Series Type

This card, if omitted, selects card numbers 401 through 599 for variable trips and 601 through 799 for logical trips. For this case, the trip numbers are equal to the card numbers.

If this card is entered, card numbers 206NNNN0 are used for entering trip data, and NNNN is the trip number. Trip numbers (NNNN) 1 through 1000 are variable trips, and 1001 through 2000 are logical trips. Trip numbers do not have to be consecutive.

W1(A) Enter EXPANDED. Any other entry is an error.

5.3 Cards 401 through 599 or 20600010 through 20610000, Variable Trips

For Cards 401 through 599, the trip numbers are equal to the card numbers. For Cards 20600010 through 20610000, the trip numbers are 1 through 1000.

Each card defines a logical statement or trip condition concerned with the quantities being advanced in time. A trip is false or not set if the trip condition is not met, and true if it is met. On restart, new trips can be introduced, old trips can be deleted, and a new trip with the same number as an old trip replaces the old trip.

The variable codes and parameters are the same as described for minor edits, Section 4. The variable code NULL is allowed for the right side when only a comparison to the constant is desired. The variable code TIMEOF, with the parameter set to the trip number, indicates the time at which the trip was last set. If the trip goes false, TIMEOF is set to -1.0. When a variable trip statement references a TIMEOF variable whose value is -1.0 (i.e., the trip is false), the evaluation of the variable trip is bypassed. Thus, the value of

the variable trip remains the same as the value on the previous time step. Quantities compared in variable trips must have the same units if neither quantity is a control variable. Either SI units or British units can be used, depending on Card 102, Word 1. The control variables use the code's internal units (SI).

W1(A) Variable code. On RESTART problems, this word can also contain DISCARD or RESET. DISCARD deletes the trip; RESET sets the trip to false. If DISCARD or RESET are entered, no further words are entered on the card.

W2(I) Parameter.

W3(A) Relationship. This may be either EQ, NE, GT, GE, LT, or LE, where the symbols have the standard FORTRAN meaning. Do not enter periods as part of the designator. Thus, use EQ rather than .EQ. to specify *equal to*, use NE rather than .NE. to specify *not equal to*, use GT rather than .GT. to specify *greater than*, use GE rather than .GE. to specify *greater than or equal to*, use LT rather than .LT. to specify *less than*, or use LE rather than .LE. to specify *less than or equal to*.

W4(A) Variable code.

W5(I) Parameter.

W6(R) Additive constant.

W7(A) Latch indicator. If L, the trip once set true remains true, even if the condition later is not met. If N, the trip is tested each time advancement.

W8(R) Timeof quantity (s). This word is optional. If it is not entered, the trip is initialized as false and the associated TIMEOF quantity is set to -1.0. If -1.0 is entered, the trip is initialized as false. If zero or a positive number is entered for TIMEOF, the trip is initialized as true. TIMEOF must not be greater than zero for NEW problems and must not be greater than the time of restart for RESTART problems.

The logical statement is "Does the quantity given by Words 1 and 2 have the relationship given by Word 3 with the quantity given by Words 4 and 5 plus Word 6?" If the relationship is false, the trip is false or not set. If the relationship is true, the trip is true or set. The TIMEOF variable is -1.0 if the trip is false. If the trip is true, the TIMEOF variable is the time the trip was last set true. Linear interpolation, along with limits between the current time step and the previous time step, is used to obtain a more accurate time when the trip was last set true. A latched trip is never reset, so the trip time never changes once it changes from -1.0. For the nonlatched trips, the trip time when set remains constant until the trip condition becomes false and then the trip time is -1.0 again. If the trip condition becomes true again, the process is repeated. For trips such as a time test, L should be used to eliminate repeated testing, although no error or difference in results will occur if N is used.

5.4 Cards 601 through 799 or 20610010 through 20620000, Logical Trips

For Cards 601 through 799, the trip numbers are equal to the card numbers. For Cards 20610010 through 20620000, the trip numbers are 1001 through 2000.

If these cards are entered, at least one of the variable trip cards must have been entered. Each card defines a logical relationship with the trips defined on these cards or on the variable trip cards. (For a more detailed description of this input, see Section 4.1.4.)

W1(I) Trip number. The absolute value of this number must be one of the trip numbers defined by the variable or logical trip cards. A negative trip number indicates that the complement of the trip is to be used in the test.

W2(A) Operator. The operator may be AND, OR, or XOR. On RESTART problems, this word can also contain DISCARD or RESET. DISCARD deletes the trip; RESET sets the trip to false. If DISCARD or RESET are entered, no further words are entered on the card and Word 1 (W1) may be zero.

W3(I) Trip number. This is similar to Word 1 (W1).

W4(A) Latch indicator. If L, the trip when set remains set. If N, the trip is tested each time advancement.

W5(R) Timeof quantity (s). This word is optional. If not entered, the trip is initialized as false, and the associated TIMEOF quantity is set to -1.0. If -1.0 is entered, the trip is initialized as false. If zero or a positive number is entered for TIMEOF, the trip is initialized as true. TIMEOF must not be greater than zero for NEW problems and must not be greater than the time of restart for RESTART problems.

The trip condition is given by the result of the following logical expression:

CONDITION OF TRIP IN W1 OPERATOR CONDITION OF TRIP IN W3.

5.5 Card 600, Trip Stop Advancement

This card can be entered in NEW and RESTART problems. One or two trip numbers may be entered. If either of the indicated trips are true, the problem advancement is terminated. These trips are tested only at the end of a requested advancement. If the trips can cycle true and false, they should be latched-type trips to ensure being true at the test time.

W1(I) Trip number.

W2(I) Trip number. A second trip number need not be entered.

6 Cards 801 through 1999, Interactive Input Data

An interactive and color display capability exists when the code is interfaced with Nuclear Plant Analyzer (NPA) software. This capability allows a user to view selected results on a color graphics terminal and to modify user-defined input quantities. A user can view RELAP5-3D© output in a format that enhances understanding of the transient phenomena and enter commands during the simulation. This input, coupled with trip and control system capability, allows a user to initiate operator-like actions, such as opening/closing valves, starting/stopping/changing speed on pumps, and changing operating power settings.

This is discussed further in Volume V, Section 4.5.

These data may be entered for either batch or interactive jobs. These cards may be used in a NEW or RESTART job; in a restart job, they add to or replace data in the restarted problem.

These cards define user-defined variables that may be changed during execution by data input from a computer terminal if the job is being run interactively. The card input defines input user-defined variable names and initial values. These user-defined variables are completely independent from the Fortran variable names used in the RELAP5-3D© coding, even if they are spelled the same. These user-defined variables can appear wherever variables listed in Section 4 can be used. Thus, the user-defined variables can be used in trips, control variable statements, search arguments for some tables, edited in minor edits, and plotted. With appropriate input, an interactive user can effect changes similar to those made by a reactor operator, such as opening/closing/repositioning valves or setting new operating points in controllers. When entering these user-defined variables, the user-defined variable name is the alphanumeric part of the variable request code and 1000000000 is the numeric part.

W1(A) User-defined variable name. Enter the user-defined variable name or DELETE in a RESTART job to delete the user-defined variable.

W2(R) Initial value. This is not needed if DELETE is entered in Word 1.

In interactive execution, the initial value is used until changed by a terminal entry. The value can be changed at any time and as often as needed. One or more user-defined variables can be changed by entering the user-defined variable name and value pairs on the computer terminal. An example is VLV1 = 0 VLV2,1 VLV3,0, POWER = 3050.+6, where VLV1, VLV2, VLV3, and POWER are user-defined variable names. The format is identical to data input on cards. An equal sign is treated as a terminating comma. The values should be floating-point quantities, but integers are converted to floating point values. The NPA interface also allows other more convenient methods for entering new values during the simulation.

W3(R) Conversion factor. Word 2 or any terminal-entered replacement value is entered in user-defined units. These quantities should be converted to SI units if they are to be

involved in comparisons or computations with quantities advanced in time. User units can be used only if these input interactive user-defined variables are used with control variables defined in compatible units. This word, if nonzero, is the conversion factor. If this word is positive, the conversion is V(converted) = V(input)•W3. If negative, V(converted) = V(input)/1.8 - W3. For temperature conversion from ^{o}F to K, Word 3 should be -255.3722222. If this word is missing, the conversion factor defaults to 1.0. If this word is zero, the next two words (W4 and W5) must contain the alphanumeric part and the numeric part of a variable request code. The conversion factor (for the case of Word 3 equal to zero) appropriate for this interactive user-defined variable is set to the conversion factor for the variable specified by W4 and W5. If SI units are in use for input, the supplied conversion factor is 1.0. If British units are in use for input, the appropriate conversion factor is set to the conversion factor for the variable specified by W4 and W5.

W4(A) Alphanumeric part of the variable request code. The alphanumeric name CNTRLVAR cannot be used.

W5(A) Numeric part of the variable request code. The numeric part must be omitted if zero.

7 Cards CCCXXNN, Hydrodynamic Components

These cards are required for NEW type problems and may be entered for RESTART problems. Hydrodynamic systems are described in a NEW problem. In a RESTART problem, the hydrodynamic systems may be modified by deleting, adding, or replacing components. The resultant problem must describe at least two volumes and one junction per system, where the junction connects the two volumes. Isolated volumes with no connecting junctions are not allowed. The junction connection code determines the placement of any volume within the system. More than one junction may be connected to an inlet or outlet. If an end has no junctions, that end is considered a closed end. Normally, only a branch has more than one junction connected to a volume end. The hydrodynamic card numbers are divided into fields, where CCC is the component number (the component numbers need not be consecutive), XX is the card type within the component number, and NN is the card number within the card type. When a range is indicated, the numbers need not be consecutive. Component types (see Card CCC0000, Word 2) allowed are the following: SNGLVOL, TMDPVOL, SNGLJUN, TMDPJUN, SNGLFW, PIPE, ANNULUS, PRIZER, BRANCH, SEPARATR, FWHTR, JETMIXER, TURBINE, ECCMIX, VALVE, PUMP, CPRSSR, MTPLJUN, MTPLFW, ACCUM, and MULTID, and PVMCJ.

This is discussed further in Volume I, Section 3; Volume II, Section 2; Volume IV, Sections 2, 3, 4, 5, 6, 7, 8, 10; and Volume V, Section 4.6.

7.1 Single-Volume Component

7.1.1 Card CCC0000, Single-Volume Name and Type

This card is required.

W1(A) Component name. Use a name descriptive of the component's use in system. A limit of 8 characters is allowed for most computers, e.g., work stations, CRAY, and IBM computers.

W2(A) Component type. Enter SNGLVOL to indicate a single-volume component or the command DELETE. The command DELETE is allowed only in RESTART problems, and the component number must be an existing component at the time of restart. The DELETE command deletes the component.

The junction connection code determines the placement of any volume within the system. More than one junction may be connected to an inlet or outlet. If an end has no junctions, that end is considered a closed end. Normally, only a branch has more than one junction connected to a volume end. For major edits, minor edits, and plot variables, the volume in the single-volume component is numbered as CCC010000.

7.1.2 Cards CCC0101 through CCC0109, Single-Volume X-Coordinate Volume Data

This card (or cards) is required for a single-volume component. The nine words can be entered on one or more cards, and the card numbers need not be consecutive.

W1(R) Volume flow area in the x-direction (m^2, ft^2).

W2(R) Length of volume in the x-direction (m, ft).

W3(R) Volume of volume (m^3, ft^3). The program requires that the volume equals the volume flow area times the length (W3 = W1•W2). This is required in all three directions. At least two of the three quantities, W1, W2, and W3, must be nonzero. If one of the quantities is zero, it will be computed from the other two. If none of the words are zero, the volume must equal the x-direction area times the x-direction length within a relative error of 0.000001. The same relative error check is done for the y- and z-directions.

W4(R) Azimuthal (horizontal) angle (degrees). The absolute value of this angle must be $\leq$ 360 degrees and is defined as a positional quantity. This angle is in the horizontal x-y plane. The angle 0 degrees is on the x axis, and the angle 90 degrees is on the y axis. Positive angels are rotated from the x axis toward the y axis. This quantity is not used in the calculation but is specified for automated drawing of nodalization diagrams.

W5(R) Inclination (vertical) angle (degrees). The absolute value of this angle must be $\leq$ 90 degrees. The angle 0 degrees is horizontal; positive angles have an upward inclination, i.e., the inlet is at the lowest elevation. This angle is used in the flow regime determination, in the interphase drag calculation, and for automated drawing of nodalization diagrams. When the absolute value of the inclination (vertical) angle is less than or equal to 30 degrees, the horizontal flow regime map is used. When the absolute value of the inclination (vertical) angle is greater than or equal to 60 degrees, the vertical flow regime map is used. Between 30 and 60 degrees, interpolation is used.

W6(R) Elevation change (m, ft). A positive value is an increase in elevation. The absolute value of this quantity must be less than or equal to the volume length. If the inclination (vertical) angle is zero, this quantity must be zero. If the inclination (vertical) angle is nonzero, this quantity must also be nonzero and have the same sign. The elevation change is used in the gravity head and checking loop closure. See Section 2.4.1 of Volume II of the manual for further discussion.A calculated elevation angle is determined by the arcsin of the ratio of the elevation change (this word) and the volume length (Word 2). This calculated elevation angle is used in the additional stratified force term.

W7(R) Wall roughness in the x-direction (m, ft). The x-direction wall roughness is limited to be greater than or equal to 1.0×10^{-9} times the x-direction hydraulic diameter. If zero, the

x-direction wall roughness is computed from 1.0×10^{-9} times the x-direction hydraulic diameter.

W8(R) Hydraulic diameter in the x-direction (m, ft). This should be computed from $4.0 \bullet \frac{\text{x-direction volume flow area}}{\text{x-direction wetted perimeter}}$. If zero, the x-direction hydraulic diameter is computed from $2.0 \bullet \left(\frac{\text{x-direction volume flow area}}{\pi}\right)^{0.5}$. A check is made to ensure the x-direction wall roughness is less than half the x-direction hydraulic diameter. See Word 1 for volume flow area.

W9(I) Volume control flags. This word has the packed format tlpvbfe. It is not necessary to input leading zeros. Volume flags consist of scalar oriented and coordinate direction oriented flags. Only one value for a scalar oriented flag is entered per volume but up to three coordinate oriented flags can be entered for a volume, one for each coordinate direction. At present, the f flag is the only coordinate direction oriented flag. This word enters the scalar oriented flags and the x-coordinate flag.

The digit t specifies whether the thermal stratification model is to be used; t = 0 specifies that the thermal stratification model is not to be used for the volume, and t = 1 specifies that the thermal stratification model is to be used for the volume. The thermal stratification model can only be applied to vertically oriented components.

The digit l specifies whether the mixture level tracking model is to be used; l = 0 specifies that the mixture level tracking model not be used for the volume, and l = 1 specifies that the mixture level tracking model be used for the volume. The mixture level tracking model can only be applied to vertically oriented components.

The digit p specifies whether the water packing scheme is to be used; p = 0 specifies that the water packing scheme is to be used for the volume, and p = 1 specifies that the water packing scheme is not to be used for the volume. The water packing scheme is recommended when modeling a pressurizer. The water packing scheme is only applied to vertically oriented volumes.

The digit v specifies whether the vertical stratification model is to be used; v = 0 specifies that the vertical stratification model is to be used for the volume, and v = 1 specifies that the vertical stratification model is not to be used for the volume. The vertical stratification model is recommended when modeling a pressurizer. The vertical stratification model is only applied to vertically oriented volumes.

The digit b specifies the interphase friction that is used; b = 0 specifies that the pipe interphase friction model will be applied, b = 1 specifies that the rod bundle interphase friction model will be applied, and b = 2 specifies that the ORNL ANS narrow channel

model will be applied (Card CCC0111 required). The b = 1 option and the b = 2 option are only applied to vertically oriented volumes.

The digit f specifies whether wall friction is to be computed; f = 0 specifies that wall friction effects are to be computed along the x-coordinate of the volume, and f = 1 specifies that wall friction effects are not to be computed along the x-coordinate of the volume.

The digit e specifies if nonequilibrium or equilibrium is to be used; e = 0 specifies that a nonequilibrium (unequal temperature) calculation is to be used, and e = 1 specifies that an equilibrium (equal temperature) calculation is to be used. Equilibrium volumes should not be connected to nonequilibrium volumes. The equilibrium option is provided only for comparison with other codes.

7.1.3 Cards CCC0181 through CCC0189, Single-Volume Y-Coordinate Volume Data

These cards are optional. These cards are used when the user specifies the y-direction connection with the crossflow model. The volume of the volume is the same for the x-, y-, and z-directions. If these cards are entered, either W1 or W2 must be nonzero.

W1(R) Area of the volume in the y-direction (m^2, ft^2). If these cards are missing or if this word is zero, this y-direction volume flow area is computed from $\frac{\text{volume of volume}}{\text{y-direction length}}$.

W2(R) Length of the crossflow volume in the y-direction (m, ft). If these cards are missing, this y-direction length is computed from $2.0 \bullet \left(\frac{\text{x–direction volume flow area}}{\pi}\right)^{0.5}$. If this word is zero, this y-direction length is computed from $\frac{\text{volume of volume}}{\text{y-direction volume flow area}}$.

W3(R) Wall roughness in the y-direction (m, ft). The y-direction wall roughness is limited to be greater than or equal to 1.0×10^{-9} times the y-direction hydraulic diameter. If zero, the y-direction wall roughness is computed from 1.0×10^{-9} times the y-direction hydraulic diameter.

W4(R) Hydraulic diameter in the y-direction (m, ft). If these cards are missing or if this word is zero, this y-direction hydraulic diameter is computed from $4.0 \bullet \frac{\text{y – direction volume flow area}}{(\pi \bullet \text{x – direction volume flow area})^{0.5}}$. See Section 2.4 of this volume of the manual. A check is made to ensure the y-direction wall roughness is less than half the y-direction hydraulic diameter.

W5(I) Volume control flags. This word has the general packed format tlpvbfe, but this word is limited to 00000f0 since it only enters the coordinate oriented flags for the y-direction.

The digit f specifies whether wall friction is to be computed; f = 0 specifies that wall friction effects are to be computed along the y-coordinate direction of the volume, and f = 1 specifies that wall friction effects are not to be computed along the y-coordinate direction of the volume.

W6(R) This word is not used. Enter 0.

W7(R) This word is not used. Enter 0.

W8(R) This word is the position change in the fixed z (vertical) direction as flow passes from the y inlet face to the y outlet face (m, ft). This quantity affects problems if connections are made to the y faces.

7.1.4 Cards CCC0191 through CCC0199, Single-Volume Z-Coordinate Volume Data

These cards are optional. These cards are used when the user specifies the z-direction connection with the crossflow model. The volume of the volume is the same for the x-, y-, and z-directions. If these cards are entered, either W1 or W2 must be nonzero.

W1(R) Area of the volume in the z-direction (m^2, ft^2). If these cards are missing or if this word is zero, this z-direction volume flow area is computed from $\frac{\text{volume of volume}}{\text{z-direction length}}$.

W2(R) Length of the crossflow volume in the z-direction (m, ft). If these cards are missing, this z-direction length is computed from $2.0 \bullet \left(\frac{\text{volume flow area}}{\pi}\right)^{0.5}$. If this word is zero, this z-direction length is computed from $\frac{\text{volume of volume}}{\text{z-direction volume flow area}}$.

W3(R) Wall roughness in the z-direction (m, ft). The z-direction wall roughness is limited to be greater than or equal to 1.0×10^{-9} times the z-direction hydraulic diameter. If zero, the z-direction wall roughness is computed from 1.0×10^{-9} times the z-direction hydraulic diameter.

W4(R) Hydraulic diameter in the z-direction (m, ft). If these cards are missing or if this word is zero, this z-direction hydraulic diameter is computed from $4.0 \bullet \frac{\text{z–direction volume flow area}}{(\pi \bullet \text{x – direction volume flow area})^{0.5}}$. See Section 2.4 of this volume of the

manual. A check is made to ensure the z-direction wall roughness is less than half the z-direction hydraulic diameter.

W5(I) Volume control flags. This word has the general packed format tlpvbfe, but this word is limited to 00000f0 since it only enters the coordinate oriented flags for the z-direction.

The digit f specifies whether wall friction is to be computed; f = 0 specifies that wall friction effects are to be computed along the z-coordinate direction of the volume, and f = 1 specifies that wall friction effects are not to be computed along the z-coordinate direction of the volume.

W6(R) This word is not used. Enter 0.

W7(R) This word is not used. Enter 0.

W8(R) This word is the position change in the fixed z (vertical) direction as flow passes from the z inlet face to the z outlet face (m, ft). This quantity affects problems if connections are made to the z faces.

7.1.5 Card CCC0111, Single-Volume ORNL ANS Interphase Model Pitch and Span Values

This card is required if the interphase friction flag b in Word 9 of Card CCC0101 through CCC0109 is set to 2 (ORNL ANS narrow channel model).

W1(R) Pitch (gap, channel width perpendicular to flow), short dimension (m, ft).

W2(R) Span (channel length perpendicular to flow), long dimension (m, ft).

7.1.6 Card CCC0131, Single-Volume Additional Wall Friction

This card is optional. If this card is not entered, the default values are 1.0 for the laminar wall friction shape factor and 0.0 for the wall friction factor heated wall effect viscosity ratio exponent. Two, four, or six quantities may be entered on the card, and the data not entered are set to default values. A description of this input is presented in Section 3 of Volume I.

W1(R) Wall friction shape factor for coordinate direction 1.

W2(R) Wall friction factor heated wall effect viscosity ratio exponent for coordinate direction 1.

W3(R) Wall friction shape factor for coordinate direction 2.

W4(R) Wall friction factor heated wall effect viscosity ratio exponent for coordinate direction 2.

W5(R) Wall friction shape factor for coordinate direction 3.

W6(R) Wall friction factor heated wall effect viscosity ratio exponent for coordinate direction 3.

7.1.7 Cards CCC0141, Single-Volume Alternate Turbulent Wall Friction

This card is optional. This card allows the specification of a user-defined turbulent wall friction factor for each coordinate direction (see Volume I, Section 3.3.8.6). The user-defined turbulent wall friction factor has the form $f = A + B(Re)^{-C}$, where A, B, and C are entered for each coordinate of each volume and Re is the volume Reynolds number for the appropriate coordinate and appropriate phase. If this card is not entered, the standard turbulent wall friction factor is used for all coordinates. If the card is entered, the standard turbulent wall friction factor can be selected for a particular coordinate direction by entering zeros for the three quantities. Three, six, or nine quantities may be entered on the card, and the data not entered are set to zeros.

W1(R) A for coordinate direction 1.

W2(R) B for coordinate direction 1.

W3(R) C for coordinate direction 1.

W4(R) A for coordinate direction 2.

W5(R) B for coordinate direction 2.

W6(R) C for coordinate direction 2.

W7(R) A for coordinate direction 3.

W8(R) B for coordinate direction 3.

W9(R) C for coordinate direction 3.

7.1.8 Card CCC0200, Single-Volume Initial Conditions

This card is required for a single-volume.

W1(I) Control word. This word has the packed format $\underline{\varepsilon bt}$. It is not necessary to input leading zeros.

The digit $\underline{\varepsilon}$ specifies the fluid, where $\underline{\varepsilon}$ =0 is the default fluid. The value for $\underline{\varepsilon} > 0$ corresponds to the position number of the fluid type indicated on the 120 - 129 Cards (i.e., $\underline{\varepsilon}$ = 1 specifies H_2O, $\underline{\varepsilon}$ = 2 specifies D_2O, etc.). The default fluid is that set for the hydrodynamic system by Cards 120 through 129 or this control word in another volume in this hydrodynamic system. The fluid type set on Cards 120 through 129 or these control

words must be consistent (i.e., not specify different fluids). If Cards 120 through 129 are not entered and all control words use the default $\underline{\varepsilon} = 0$, then H_2O is assumed as the fluid.

The digit $\underline{b}$ specifies whether boron is present or not. The digit $\underline{b} = 0$ specifies that the volume liquid does not contain boron; $\underline{b} = 1$ specifies that a boron concentration in mass of boron per mass of liquid (which may be zero) is being entered after the other required thermodynamic information.

The digit $\underline{t}$ specifies how the following words are to be used to determine the initial thermodynamic state. Entering $\underline{t} = 0$ through 3 specifies only one component (vapor/liquid). Entering $\underline{t} = 4$, 5, 6, or 8 allows the specification of two components (vapor/liquid and noncondensable gas).

With options $\underline{t}$ equal to 4, 5, 6, or 8, the names of the components of the noncondensable gas must be entered on Card 110, and the mass fractions of the components of the noncondensable gas are entered on Card 115 (if more the 1 noncondensable component is specified on Card 110). Card CCC0301 may also be used for the mass fractions of the components of the noncondensable gas.

If $\underline{t} = 0$, the next four words are interpreted as pressure (Pa, lb_f/in^2), liquid specific internal energy (J/kg, Btu/lb_m), vapor/gas specific internal energy (J/kg, Btu/lb_m), and vapor/gas void fraction. These quantities will be interpreted as nonequilibrium or equilibrium conditions depending on the specific internal energies used to define the thermodynamic state. Enter only the minimum number of words required. If entered, boron concentration (mass of boron per mass of liquid) follows the last required word for the thermodynamic conditions.

If $\underline{t} = 1$, the next two words are interpreted as temperature (K, ^oF) and static quality in equilibrium condition. Enter only the minimum number of words required. If entered, boron concentration (mass of boron per mass of liquid) follows the last required word for the thermodynamic conditions.

If $\underline{t} = 2$, the next two words are interpreted as pressure (Pa, lb_f/in^2) and static quality in equilibrium condition. Enter only the minimum number of words required. If entered, boron concentration (mass of boron per mass of liquid) follows the last required word for the thermodynamic conditions.

If $\underline{t} = 3$, the next two words are interpreted as pressure (Pa, lb_f/in^2) and temperature (K, ^oF) in nonequilibrium or equilibrium conditions depending on the pressure and temperature used to define the thermodynamic state. Enter only the minimum number of words

required. If entered, boron concentration (mass of boron per mass of liquid) follows the last required word for the thermodynamic conditions.

The following options are used for input of noncondensable states. In all cases, the criteria used for determining the range of values for static quality are;

1. 1.0E-9 $\leq$ static quality $\leq$ 0.99999999, two phase conditions

2. static quality < 1.0 E-9 or static quality > 0.99999999, single-phase conditions.

The static quality is given by $M_g/(M_g + M_f)$, where $M_g = M_s + M_n$. Section 3.2 of Volume I of the manual discusses this further.

Noncondensable options are as follows:

If t = 4, the next three words are interpreted as pressure (Pa, lb_f/in^2), temperature (K, ^oF), and static quality in equilibrium condition. Using this input option with static quality > 0.0 and $\leq$ 1.0, saturated noncondensables (100% relative humidity) will result. The temperature is restricted to be less than the saturation temperature at the input pressure and less than the critical temperature; otherwise an input error will occur. Setting static quality to 0.0 is used as a flag that will initialize the volume to all noncondensable (dry noncondensable, 0% relative humidity) with no temperature restrictions. Static quality is reset to 1.0 using this dry noncondensable option. Enter only the minimum number of words required. If entered, boron concentration (mass of boron per mass of liquid) follows the last required word for the thermodynamic conditions.

If t = 5, the next three words are interpreted as temperature (K, ^oF), static quality, and noncondensable quality in equilibrium condition. Both the static and noncondensable qualities are restricted to be between 1.0 E-9 and 0.99999999. Little experience has been obtained using this option, and it has not been checked out. Enter only the minimum number of words required. If entered, boron concentration (mass of boron per mass of liquid) follows the last required word for the thermodynamic conditions.

If t = 6, the next five words are interpreted as pressure (Pa, lb_f/in^2), liquid specific internal energy (J/kg, Btu/lb_m), vapor/gas specific internal energy (J/kg, Btu/lb_m), vapor/gas void fraction, and noncondensable quality. These quantities will be interpreted as nonequilibrium or equilibrium conditions depending on the specific internal energies used to define the thermodynamic state. This option can be used to set the relative humidity to less than or equal to 100%. The combinations of vapor/gas void fraction and noncondensable quality must be thermodynamically consistent. If the noncondensable quality is set to 0.0, noncondensables are not present and the input processing branches to that type of processing (t = 0). For this situation, Card 110 must be entered, and Card 115

must be entered if more than 1 noncondensable component is specified on Card 110. If noncondensables are present (noncondensable quality greater than 0.0), then the vapor/gas void fraction must also be greater than 0.0. If the noncondensable quality is set to 1.0 (pure noncondensable, 0% relative humidity), then the vapor/gas void fraction must also be 1.0. When both the vapor/gas void fraction and the noncondensable quality are set to 1.0, the volume temperature is calculated from the noncondensable energy equation using the input vapor/gas specific internal energy. Enter only the minimum number of words required. If entered, boron concentration (mass of boron per mass of liquid) follows the last required word for the thermodynamic conditions.

If t = 8, the next five words are interpreted as pressure (Pa, lb_f/in^2), liquid temperature (K, ^oF), vapor/gas temperature (K, ^oF), vapor/gas void fraction, and noncondensable quality. These quantities will be interpreted as nonequilibrium or equilibrium conditions depending on the temperatures used to define the thermodynamic state. This option can be used to set the relative humidity to less than or equal to 100%. The combinations of vapor/gas void fraction and noncondensable quality must be thermodynamically consistent. If the noncondensable quality is set to 0.0, noncondensables are not present and the input processing branches to that type of processing. For this situation, Card 110 must be entered, and Card 115 must be entered if more than 1 noncondensable component is specified on Card 110. If noncondensables are present (noncondensable quality greater than 0.0), then the vapor/gas void fraction must also be greater than 0.0. If the noncondensable quality is set to 1.0 (pure noncondensable, 0% relative humidity), then the vapor/gas void fraction must also be 1.0. When both the vapor/gas void fraction and the noncondensable quality are set to 1.0, the volume specific internal energy is calculated from the noncondensable energy equation using the input vapor/gas temperature. Enter only the minimum number of words required. If entered, boron concentration (mass of boron per mass of liquid) follows the last required word for the thermodynamic conditions.

W2-W7(R) Quantities as described under Word 1 (W1). Depending on the control word, two through five thermodynamic quantities may be required. Enter only the minimum number required. If entered, boron concentration (mass of boron per mass liquid) follows the last required word for thermodynamic conditions.

7.1.9 Card CCC0300, Single-Volume Variable Volume Control

This card is optional. The presence of this card in the input deck signals that the variable volume option is to be activated for this single-volume component. The items on the card specify how the computational volume of this single-volume component is to be determined. The volume specified on the CCC0101 card for this volume is the reference volume of the computational volume. The volume of the computational volume is the product of the reference volume and the output of the control variable or

general table. The minimum allowed value of the computational volume is 1.0×10^{-6} m^3; values less than this will result in the code terminating the calculation.

This is discussed further in Volume I, Section 3.4.13; Volume II, Section 2.3.11; and Volume V, Section 3.4.11.

W1(I) Control variable number. The value of the indicated control variable is used as either the normalized volume of the computational volume (if Word 2 is not entered on this card) or as the normalized stem position (if Word 2 is entered on this card). This word must be entered as zero if no control variable is to be used.

W2(I) General table number. The input argument for the table is either the value (normalized stem position) of the control variable (entered as Word 1) or time (if Word 1 is entered as zero). If the input argument comes from a control variable, no trip should be specified in the input for the general table.

7.1.10 Card CCC0301 Single-Volume Noncondensable Mass Fraction

This card is optional. If omitted, the noncondensable mass fractions are obtained from the noncondensable mass fractions entered on Card 115.

W1-WN(R) Mass fractions for the noncondensable species entered on Card 110. The number of words on this card should be the same as on Card 110. The noncondensable mass fractions must sum to 1.0 within a relative error of 1.0×10^{-10}.

7.2 Time-Dependent Volume Component

7.2.1 Card CCC0000, Time-Dependent Name and Type

This card is required.

W1(A) Component name. Use a name descriptive of the component's use in system. A limit of 8 characters is allowed for most computers, e.g., work stations, CRAY, and IBM computers.

W2(A) Component type. Enter TMDPVOL to indicate a time-dependent volume component or the command DELETE. The command DELETE is allowed only in RESTART problems, and the component number must be an existing component at the time of restart. The DELETE command deletes the component.

For major edits, minor edits, and plot variables, the volume in the time-dependent volume component is numbered as CCC010000.

7.2.2 Cards CCC0101 through CCC0109, Time-Dependent Volume Geometry

This card (or cards) is required for a time-dependent volume component. The nine words can be entered on one or more cards, and the card numbers need not be consecutive.

W1(R) Volume flow area (m^2, ft^2). When a time-dependent volume is used to model a pressure boundary condition [i.e., the time-dependent volume is connected to the system through a normal junction(i.e., not a time-dependent junction)], it is generally recommended that the cross-sectional area of the time-dependent volume be large compared to the area of the normal junction.

W2(R) Length of volume (m, ft). After initialization, the length is set to zero.

W3(R) Volume of volume (m^3, ft^3). The program requires that the volume equals the volume flow area times the length (W3 = W1•W2). At least two of the three quantities, W1, W2, and W3, must be nonzero. If one of the quantities is zero, it will be computed from the other two. If none of the words are zero, the volume must equal the area times the length within a relative error of 0.000001. After initialization, the volume is set to zero.

W4(R) Azimuthal (horizontal) angle (degrees). The absolute value of this angle must be $\leq$ 360 degrees. This angle is in the horizontal x-y plane. The angle 0 degrees is on the x axis, and the angle 90 degrees is on the y axis. Positive angles are rotated from the x axis toward the y axis. This quantity is not used in the calculation but is specified for automated drawing of nodalization diagrams.

W5(R) Inclination (vertical) angle (degrees). The absolute value of this angle must be $\leq$ 90 degrees. The angle 0 degrees is horizontal; positive angles have an upward inclination, i.e., the inlet is at the lowest elevation. This angle is used in the flow regime determination, in the interphase drag calculation, and for automated drawing of nodalization diagrams. As with the other components, this angle determines if the horizontal or vertical flow regime map is used. This is not important for this component, since the correlations that depend on the flow regime maps are not needed for this component. The volume conditions are prescribed through input Cards CCC0201 through CCC0299.

W6(R) Elevation change (m, ft). A positive value is an increase in elevation. The absolute value of this quantity must be less than or equal to the volume length. If the vertical angle is zero, this quantity must be zero. If the vertical angle is nonzero, this quantity must also be nonzero and have the same sign. See Section 2.4.1 of Volume II of the manual for further discussion. After initialization, the elevation change is set to zero.

W7(R) Wall roughness (m, ft). The wall roughness is limited to be greater than or equal to 1.0×10^{-9} times the hydraulic diameter. If zero, the wall roughness is computed from 1.0×10^{-9} times the hydraulic diameter.

W8(R) Hydraulic diameter (m, ft). This should be computed from $4.0 \bullet \left(\frac{\text{volume flow area}}{\text{wetted perimeter}}\right)$. If zero, the hydraulic diameter is computed from $2.0 \bullet \left(\frac{\text{volume flow area}}{\pi}\right)^{0.5}$. A check is made to ensure the pipe roughness is less than half the hydraulic diameter. See Word 1 for the volume flow area.

W9(I) Volume control flags. This word has the packed format tlpvbfe. It is not necessary to input leading zeros. Volume flags consist of scalar oriented and coordinate direction oriented flags. Only one value for a scalar oriented flag is entered per volume but up to three coordinate oriented flags can be entered for a volume, one for each coordinate direction. At present, the f flag is the only coordinate direction oriented flag. This word enters the scalar oriented flags and the x-coordinate flag. The y- and z-coordinate data (wall friction flag f) are not read in for the time-dependent component because the wall friction is not used for time-dependent volumes.

The digit t is not used and must be entered as zero (t = 0). The thermal stratification model is not used in a time-dependent volume.

The digit l is not used and must be entered as zero (l = 0). The mixture level tracking model is not used in a time-dependent volume.

The digit p is not used and should be input as zero (p = 0). The major edit will show p = 1.

This digit v is not used and should be input as zero (v = 0). The major edit will show v = 1.

The digit b specifies the interphase friction that is used; b = 0 specifies that the pipe interphase friction model will be applied, and b=1 specifies that the rod bundle interphase friction model will be applied. The interphase friction models are not used for time-dependent volumes, so either b = 0 or b = 1 can be inputted and the output will show the digit entered.

The digit f specifies whether wall friction is to be computed; f = 0 specifies that wall friction effects are to be computed for the volume, and f = 1 specifies that wall friction effects are not to be computed for the volume. The wall friction model is not used for time-dependent volumes, so either f = 0 or f = 1 can be inputted and the output will show the digit entered.

The digit e specifies if nonequilibrium or equilibrium is to be used; e = 0 specifies that a nonequilibrium (unequal temperature calculation is to be used, and e = 1 specifies that an equilibrium (equal temperature) calculation is to be used. Equilibrium volumes should not be connected to nonequilibrium volumes. The equilibrium option is provided only for comparison to other codes. The nonequilibrium and equilibrium options are not used for time-dependent volumes, so either e = 0 or e = 1 can be used.

7.2.3 Card CCC0200, Time-Dependent Volume Data Control Word

This card is required for a time-dependent volume.

W1(I) Control word for time-dependent data on CCC02NN cards. This word has the packed format εbt. It is not necessary to input leading zeros.

The digit ε specifies the fluid, where ε = 0 is the default fluid. The value for ε > 0 corresponds to the position number of the fluid type indicated on the 120 - 129 cards (i.e., ε = 1 specifies H_2O, ε = 2 specifies D_2O, etc.). The default fluid is that set for the hydrodynamic system by Cards 120 through 129 or this control word in another volume in this hydrodynamic system. The fluid type set on Cards 120 through 129 or these control words within the hydrodynamic system must be consistent (i.e., not specify different fluids). If Cards 120 through 129 are not entered and all control words use the default ε = 0, then H_2O is assumed as the fluid.

The digit b specifies whether boron is present or not. The digit b = 0 specifies that the volume liquid does not contain boron; b = 1 specifies that a boron concentration in mass of boron per mass of liquid (which may be zero) is being entered after the other required thermodynamic information.

The digit t specifies how the words of the time-dependent volume data in Cards CCC0201 through CCC0299 are to be used to determine the initial thermodynamic state. Entering t equal to 0 through 3 specifies one component (vapor/liquid). Entering t equal to 4, 5, 6, or 8 allows the specification of two components (vapor/liquid and noncondensable gas).

With options t equal to 4, 5, 6, or 8, the names of the components of the noncondensable gas must be entered on Card 110, and the mass fractions of the components are entered on Card 115 (if more than 1 noncondensable component is specified on Card 110).

If t = 0, the second, third, fourth, and fifth words of the time-dependent volume data on Cards CCC0201 through CCC0299 are interpreted as pressure (Pa, lb_f/in^2), liquid specific internal energy (J/kg, Btu/lb_m), vapor/gas specific internal energy (J/kg, Btu/lb_m), and vapor/gas void fraction. These quantities will be interpreted as nonequilibrium or equilibrium conditions depending on the specific internal energies used to define the

thermodynamic state. Enter only the minimum number of words required. If entered, boron concentration (mass of boron per mass of liquid) follows the last required word for thermodynamic conditions.

If t = 1, the second and third words of the time-dependent volume data on Cards CCC0201 through CCC0299 are interpreted as temperature (K, ^{o}F) and static quality in equilibrium condition. Enter only the minimum number of words required. If entered, boron concentration (mass of boron per mass of liquid) follows the last required word for thermodynamic conditions.

If t = 2, the second and third words of the time-dependent volume data on Cards CCC0201 through CCC0299 are interpreted as pressure (Pa, lb_f/in^2) and static quality in equilibrium condition. Enter only the minimum number of words required. If entered, boron concentration (mass of boron per mass of liquid) follows the last required word for thermodynamic conditions.

If t = 3, the second and third words of the time-dependent volume data on Cards CCC0201 through CCC0299 are interpreted as pressure (Pa, lb_f/in^2) and temperature (K, ^{o}F) in nonequilibrium or equilibrium conditions depending on the pressure and temperature used to define the thermodynamic state. Enter only the minimum number of words required. If entered, boron concentration (mass of boron per mass of liquid) follows the last required word for thermodynamic conditions.

The following options are used for input of noncondensable states. In all cases, the criteria used for determining the range of values for static quality are;

1. 1.0E-9 $\leq$ static quality $\leq$ 0.99999999, two-phase conditions

2. static quality < 1.0E-9 or static quality > 0.99999999, single-phase conditions.

The static quality is given by $M_g/(M_g + M_f)$, where $M_g = M_n + M_s$. Section 3.2 of Volume I of the manual discusses this further.

Noncondensable options are as follows:

If t = 4, the second, third, and fourth words of the time-dependent data on Cards CCC0201 through CCC0299 are interpreted as pressure (Pa, $lb_f/in.^2$), temperature (K, ^{o}F), and static quality in equilibrium condition. Using this input option with static quality > 0.0 and $\leq$ 1.0, saturated noncondensables (100% relative humidity) will result. The temperature is restricted to be less than the saturation temperature at the input pressure and less than the critical temperature; otherwise an input error will occur. Setting static quality to 0.0 is used as a flag that will initialize the volume to all noncondensable (dry noncondensable,

0% relative humidity) with no temperature restrictions. Static quality is reset to 1.0 using this dry noncondensable option. Enter only the minimum number of words required. If entered, boron concentration (mass of boron per mass of liquid) follows the last required word for thermodynamic conditions.

If t = 5, the second, third, and fourth words of the time-dependent data on Cards CCC0201 through CCC0299 are interpreted as temperature (K, ^{o}F), static quality, and noncondensable quality in equilibrium condition. Both the static and noncondensable qualities are restricted to be between 1.0E-9 and 0.99999999. Enter only the minimum number of words required. If entered, boron concentration (mass of boron per mass of liquid) follows the last required word for thermodynamic conditions. Little experience has been obtained using this option, and it has not been checked out.

If t = 6, the second, third, fourth, fifth, and sixth words of the time-dependent data on Cards CCC0201 through CCC0299 are interpreted as pressure (Pa, $lb_f/in.^2$), liquid specific internal energy (J/kg, Btu/lb_m), vapor/gas specific internal energy (J/kg, Btu/lb_m), vapor/gas void fraction, and noncondensable quality. These quantities will be interpreted as nonequilibrium or equilibrium conditions depending on the specific internal energies used to define the thermodynamic state. This option can be used to set the relative humidity to less than or equal to 100%. The combinations of vapor/gas void fraction and noncondensable quality must be thermodynamically consistent. If the noncondensable quality is set to 0.0, noncondensables are not present, and the input processing branches to that type of processing (t = 0). For this situation, Card 110 must be entered, and Card 115 must be entered if more than 1 noncondensable component is specified on Card 110. If noncondensables are present (noncondensable quality greater than 0.0), then the vapor/gas void fraction must also be greater than 0.0. If the noncondensable quality is set to 1.0 (pure noncondensable, 0% relative humidity), then the vapor/gas void fraction must also be 1.0. When both the vapor/gas void fraction and the noncondensable quality are set to 1.0, the volume temperature is calculated from the noncondensable energy equation using the input vapor/gas specific internal energy. Enter only the minimum number of words required. If entered, boron concentration (mass of boron per mass of liquid) follows the last required word for thermodynamic conditions.

If t = 8, the second, third, fourth, fifth, and sixth words of the time-dependent data on Cards CCC0201 through CCC0299 are interpreted as pressure (Pa, lb_f/in^2), liquid temperature (K, ^{o}F), vapor/gas temperature (K, ^{o}F), vapor/gas void fraction, and noncondensable quality. These quantities will be interpreted as nonequilibrium or equilibrium conditions depending on the temperatures used to define the thermodynamic state. This option can be used to set the relative humidity to less than or equal to 100%. The combinations of vapor/gas void fraction and noncondensable quality must be thermodynamically consistent. If the noncondensable quality is set to 0.0, noncondensables are not present, and the input processing branches to that type of

processing. For this situation, Card 110 must be entered, and Card 115 must be entered if more than 1 noncondensable component is specified on Card 110. If noncondensables are present (noncondensable quality greater than 0.0), then the vapor/gas void fraction must also be greater than 0.0. If the noncondensable quality is set to 1.0 (pure noncondensable, 0% relative humidity), then the vapor/gas void fraction must also be 1.0. When both the vapor/gas void fraction and the noncondensable quality are set to 1.0, the volume specific internal energy is calculated from the noncondensable energy equation using the input vapor/gas temperature. Enter only the minimum number of words required. If entered, boron concentration (mass of boron per mass of liquid) follows the last required word for thermodynamic conditions.

W2(I) Table trip number. This word is optional. If missing or zero and Word 3 is missing, no trip is used, and the time argument is the advancement time. If nonzero and Word 3 is missing, this number is the trip number, and the time argument is -1.0×10^{308} if the trip is false, and the advancement time minus the trip time if the trip is true. If zero and Word 3 is present, no trip is used, and Word 3 and Word 4 are a variable request code that specifies the search argument for the table look up and interpolation.

W3(A) Alphanumeric part of variable request code. This quantity is optional. If not present, time is the search argument. If present, this word and the next are a variable request code that specifies the search argument for the table lookup and interpolation. If the trip number is zero, the specified argument is used. If the trip number is nonzero, -1.0×10^{308} is used if the trip is false, and the specified argument is used if the trip is true. TIME can be selected, but note that the trip logic is different than if this word were omitted. The variable MFLOWJ should not be used as a search variable; a user-initialized control variable that uses MFLOWJ should be used instead (see Volume V).

W4(I) Numeric part of variable request code. This is assumed zero if missing.

7.2.4 Cards CCC0201 through CCC0299, Time-Dependent Volume Data

These cards are required for time-dependent volume components. A set of data consists of the search variable (e.g., time) followed by the required data indicated by control Word 1 on Card CCC0200. The card numbers need not be consecutive, but the value of the search variable in a succeeding set must be equal to or greater than the value in the previous set. One or more sets of data, up to 5,000 sets, may be entered. Enter only the minimum number of words required. If entered, boron concentration follows the last required word for thermodynamic conditions. Linear interpolation is used if the search argument lies between the search variable entries. End-point values are used if the argument lies outside the table values. Only one set is needed if constant values are desired, and computer time is reduced when only one set is entered. Step changes can be accommodated by entering the two adjacent sets with the same search variable values or an extremely small difference between them. Given two identical argument values, the set selected will be the closest to the previous argument value. Sets may be entered one or more per card and may be split across cards. The total number of words must be a multiple of the set size. For large sets

of data, continuation cards will be needed. The total number of words on a card and its continuation cards may not exceed 2,047.

Inputting time-dependent volume tables where the search variable is a thermodynamic variable from some other component can run into difficulties if the component numbering is such that the time-dependent volume is initialized before the component providing the needed search variable. This problem can be circumvented by always referencing lower-number components in the search variable. Another reliable fix for this is to make the search variable a control system output in the desired units, while the thermodynamic variable is the control system input in code internal (SI) units. The control system initial value can be set to the desired initial value of the search variable, and this will be used by the time-dependent table.

W1(R) Search variable (e.g., time).

W2-W7(R) Quantities as described under Word 1 in Card 200. Depending on the control word, two through five thermodynamic quantities may be required. Enter only the minimum number required. If entered, boron concentration (mass of boron per mass of liquid) follows the last required word for thermodynamic conditions.

As described above, sets may be entered one or more per card.

7.2.5 Card CCC0301, Time-Dependent Volume Noncondensable Mass Fraction

This card is optional. If omitted, the noncondensable mass fractions are obtained from the noncondensable mass fractions entered on Card 115.

W1-WN(R) Mass fractions for the noncondensable species entered on Card 110. The number of words on this card should be the same as on Card 110. The noncondensable mass fractions must sum to 1.0 within a relative error of 1.0×10^{-10}.

7.3 Single-Junction Component

7.3.1 Card CCC0000, Single-Junction Name and Type

This card is required.

W1(A) Component name. Use a name descriptive of the component's use in system. A limit of 8 characters is allowed for most computers, e.g., work stations, CRAY, and IBM computers.

W2(A) Component type. Enter SNGLJUN to indicate a single-junction component or the command DELETE. The command DELETE is allowed only in RESTART problems, and the component number must be an existing component at the time of restart. The DELETE command deletes the component.

For major edits, minor edits, and plot variables, the junction in the single-junction component is numbered CCC000000.

7.3.2 Cards CCC0101 through CCC0109, Single-Junction Geometry

This card (or cards) is required for single-junction components.

W1(I) From connection code to a component. This refers to the component from which the junction coordinate direction originates. An old or an expanded format can be used to connect volumes. In the old format (only allowed for connection from 1-D components), use CCC000000 if the connection is from the inlet side of the component and use CCC010000 if the connection is from the outlet side of the component. In the expanded format, the connection code for 1-D components is CCCXX000F [where CCC is the component number, XX is the volume number (greater than 00 and less than 100) for 1-D pipes/annuli/pressurizers, XX is 01 for all other 1-D components, and F indicates the face number], and the connection code for 3-D components is CCCXYYZZF [where CCC is the component number, X is the first coordinate direction (x or r) position number, YY is the second coordinate direction (y or θ) position number, ZZ is the third coordinate direction (z) position number, and F indicates the face number]. A nonzero F specifies the expanded format. The number F equal to 1 and 2 specifies the inlet and outlet faces for the first coordinate direction (x or r), which is a 1-D volume's coordinate direction (x) (see Section 2.1 of Volume II of this manual). The number F equal to 3 through 6 specifies crossflow (y or z) for 1-D volumes. The number F equal to 3 and 4 would specify inlet and outlet faces for the second coordinate direction (y or θ); F equal to 5 and 6 would do the same for the third coordinate direction (z). For connecting from a time-dependent volume using the old format, both CCC000000 and CCC010000 are allowed. For connecting from a time-dependent volume using the expanded format, only the number F equal to 1 or 2 is allowed. Section 4.4 in this Appendix discusses this further.

W2(I) To connection code to a component. This refers to the component at which the junction coordinate direction ends. See the description for W1 above; use to instead of from.

W3(R) Junction flow area (m^2, ft^2). If zero, the junction flow area is set to the minimum volume flow area of the adjoining volumes. For abrupt area changes, the junction flow area must be equal to or smaller than the minimum of the adjoining volume flow areas. For smooth area changes, there are no restrictions.

W4(R) Reynolds number independent forward flow energy loss coefficient, A_F. This quantity will be used in each of the phasic momentum equations when the junction velocity of that phase is positive or zero. Note: a variable loss coefficient may be specified (see Section 7.3.4 of this Appendix). The interpretation and use of the coefficient depends on whether the smooth or abrupt area change option is specified or grid spacers are modeled (see

Section 2.4.1 of Volume II of this manual). This quantity must be greater than or equal to zero. See Section 5.6 of Volume V for more information.

W5(R) Reynolds number independent reverse flow energy loss coefficient, A_R. This quantity will be used in each of the phasic momentum equations when the junction velocity of that phase is negative. Note: a variable loss coefficient may be specified (see Section 7.3.4 of this Appendix). The interpretation and use of the coefficient depends on whether the smooth or abrupt area change option is specified or grid spacers are modeled (see Section 2.4.1 of Volume II of this manual). This quantity must be greater than or equal to zero. See Section 5.6 of Volume V for more information.

W6(I) Junction control flags. This word has the packed format jefvcahs. It is not necessary to input leading zeros.

The digit j specifies that this junction is a jet junction; j = 0 specifies that the jet junction model will not be applied, and j = 1 specifies that the jet junction model will be applied. Pool surface condensation is enhanced in the volume above the junction when this model is activated. This junction must be underneath the to volume.

The digit e specifies the modified PV term in the energy equations; e = 0 specifies that the modified PV term will not be applied, and e = 1 specifies that the modified PV term will be applied.

The digit f specifies CCFL options; f = 0 specifies that the CCFL model will not be applied, and f = 1 specifies that the CCFL model will be applied.

The digit v specifies stratification entrainment/pullthrough options, where this model is for junctions connected to a horizontal or vertical volume; v = 0 specifies the model is not applied, v = 1 specifies an upward-oriented junction from a horizontal volume (offtake volume must be vertical), v = 2 specifies a downward-oriented junction from a horizontal volume (offtake volume must be vertical), and v = 3 specifies a centrally (side) located junction from a horizontal or vertical volume. For v = 1 or 2, the horizontal volume flow area must be greater than or equal to the offtake volume flow area.

The digit c specifies choking options; c = 0 specifies that the standard choking model will be applied, c = 1 specifies that neither choking model will be applied, and c = 2 specifies that the modified Henry-Fauske choking model will be applied.

The digit a specifies area change options (see Volume II, Section 2.4.1 and Volume V, Section 4.6.3); a = 0 specifies either a smooth area change or no area change, a = 1 specifies the full abrupt area change model (code-calculated K_{loss}, area apportioning at a branch, restricted junction area, and extra interphase drag), and a = 2 specifies the partial abrupt area change model (no code-calculated K_{loss}, but includes area apportioning at a

branch, restricted junction area, and extra interphase drag). It is recommended that the abrupt area change model (a = 1 or a = 2) be used at branches.

The digit h specifies nonhomogeneous or homogeneous; h = 0 specifies the nonhomogeneous (two velocity momentum equations) option, and h = 1 or 2 specifies the homogeneous (single-velocity momentum equation) option. For the homogeneous option (h = 1 or 2), the major edit printout will show a 1.

The digit s specifies momentum flux options; s = 0 specifies momentum flux in both the to volume and the from volume, s = 1 specifies momentum flux in the from volume but not in the to volume, s = 2 specifies momentum flux in the to volume but not in the from volume, and s = 3 specifies no momentum flux in either the to or the from volume.

The meaning of the following three words (W7, W8, and W9) are different depending on the choking model chosen with the c junction control flag.

If c = 0 or c = 1, then the following definitions are used:

W7(R) Subcooled discharge coefficient. This quantity is applied only to subcooled liquid choked flow calculations if c = 0 and is not used if c = 1. The quantity must be > 0.0 and ≤ 2.0. If W7, W8, and W9 are missing, then W7, W8, and W9 are set to 1.0.

W8(R) Two-phase discharge coefficient. This quantity is applied only to two-phase choked flow calculations if c = 0 and is not used if c = 1. The quantity must be > 0.0 and ≤ 2.0. If W7 is entered and W8 and W9 are missing, then W8 and W9 are set to 1.0.

W9(R) Superheated discharge coefficient. This quantity is applied only to superheated vapor/gas choked flow calculations if c = 0 and is not used if c = 1. The quantity must be > 0.0 and ≤ 2.0. If W7 and W8 are entered and W9 is missing, then W9 is set to 1.0.

If c = 2, then the following definitions are used:

W7(R) This word is the discharge coefficient. The quantity must be > 0.0 and ≤ 2.0. If W7 and W8 are missing, then W7 is set to 1.0 and W8 is set to 0.14.

W8(R) This word is the thermal nonequilibrium constant. If W8 is < 0.01, the equilibrium option is used and W8 is reset to 0.0. If W8 is > 1000.0, the frozen option is used and W8 is reset to 1000.0. If W7 is entered and W8 is missing, then W8 is set to 0.14.

W9(R) This word is not used (do not enter).

7.3.3 Card CCC0110, Single-Junction Diameter and CCFL Data

This card is optional. The defaults indicated for each word are used if the card is not entered. If this card is being used to specify only the junction hydraulic diameter for the interphase drag calculation (i.e., f = 0 in Word 6 of Cards CCC0101 through CCC0109), then, the diameter should be entered in Word 1 and any allowable values should be entered in Words 2 through 4 (will not be used). If this card is being used for the CCFL model (i.e., f = 1 in Word 6 of Cards CCC0101 through CCC0109), then enter all four words for the appropriate CCFL model if values different from the default values are desired.

W1(R) Junction hydraulic diameter, D_j (m, ft). This quantity is the junction hydraulic diameter used in the CCFL correlation equation, interphase drag, form loss Reynolds number, and jet junction model. This number must be $\geq$ 0. This number should be computed from $4.0 \bullet \left(\frac{\text{junction area}}{\text{wetted perimeter}}\right)$. If zero is entered or if the default is used, the junction diameter is computed from $2.0 \bullet \left(\frac{\text{junction area}}{\pi}\right)^{0.5}$. See Word 3 of Cards CCC0101 through CCC0109 for the junction area.

W2(R) Flooding correlation form, β. If zero, the Wallis CCFL form is used. If one, the Kutateladze CCFL form is used. If between zero and one, Bankoff weighting between the Wallis and Kutateladze CCFL forms is used. This number must be $\geq$ 0 and $\leq$ 1. The default value is 0 (Wallis form). See Section 3 of Volume I for details of the model.

W3(R) Vapor/gas intercept, c. This quantity is the vapor/gas intercept used in the CCFL correlation (when $H_f^{1/2} = 0$) and must be > 0. The default value is 1.

W4(R) Slope, m. This quantity is the slope used in the CCFL correlation and must be > 0. The default value is 1.

7.3.4 Card CCC0111, Single-Junction Form Loss Data

This card is optional. The user-specified form loss coefficients are given in Words 4 and 5 of Card CCC0101 if this card is not entered. If this card is entered, the form loss coefficients depend on the flow conditions and are calculated from

$$K_F = A_F + B_F Re^{-C_F}$$

$$K_R = A_R + B_R Re^{-C_R}$$

where K_F and K_R are the forward and reverse form loss coefficients; A_F, A_R, B_F, B_R, C_F, and C_R are user-specified constants. A_F and A_R are Words 4 and 5 of Cards CCC0101 through CCC0109; B_F, B_R, C_F,

and C_R are Words 1, 2, 3, and 4 of this card (CCC0111); and Re is the junction Reynolds number based on mixture fluid properties. If this card is being used for the form loss calculations, then enter all four words for the appropriate expression.

W1(R) B_F (≥ 0). This quantity must be greater than or equal to zero.

W2(R) C_F (≥ 0). This quantity must be greater than or equal to zero.

W3(R) B_R (≥ 0). This quantity must be greater than or equal to zero.

W4(R) C_R (≥ 0). This quantity must be greater than or equal to zero.

7.3.5 Card CCC0113, Single-Junction Face Placement

This card is optional. It is used to improve the graphical display of the hydrodynamic nodes. It is used to resolve problems with converging and diverging flows, that is, multiple junctions attached to the same face of a volume. With the standard input, each junction attached to the same face of a volume would be superimposed on the graphical display since each junction would be attached to the center of the volume face. For junctions with this card, the point of leaving the “from” volume and entering the “to” volume is allowed to be other than the center of the faces. The volume face is perpendicular to one of the coordinate directions. The attachment position is given by specifying the coordinates in the remaining two directions. Four words are entered on the card; two words for the coordinates for the “from” face, and two words for the two coordinates for the “to” face. The coordinates are entered in the order x, then y, then z, skipping the coordinate direction perpendicular to the face. The values are dimensionless. The actual coordinates are given by these values times the position change in moving from the volume center to the face in that direction. A value of 0.0 means no change from the center of the volume in that direction, and 1.0 means move to the edge of the volume in that direction. Positive or negative numbers can be entered, and the sign indicates moving in the positive or negative direction along that coordinate. A value greater than 1.0 can be used to get separation; the maximum allowed value is 25.0. The default is 0.0.

W1(R) First remaining coordinate value for the “from” face (dimensionless).

W2(R) Second remaining coordinate value for the “from” face (dimensionless).

W3(R) First remaining coordinate value for the “to” face (dimensionless).

W4(R) Second remaining coordinate value for the “to” face (dimensionless).

7.3.6 Card CCC0201, Single-Junction Initial Conditions

This card is required for single-junction components.

W1(I) Control word. If zero, the next two words are velocities; if one, the next two words are mass flow rates.

W2(R) Initial liquid velocity or initial liquid mass flow rate. This quantity is either velocity (m/s, ft/s) or mass flow rate (kg/s, lb_m/s), depending on the control word.

W3(R) Initial vapor/gas velocity or initial vapor/gas mass flow rate. This quantity is either velocity (m/s, ft/s) or mass flow rate (kg/s, lb_m/s), depending on the control word.

W4(R) Interface velocity (m/s, ft/s). Enter zero.

7.4 Time-Dependent Junction Component

7.4.1 Card CCC0000, Time-Dependent Junction Name and Type

This card is required.

W1(A) Component name. Use a name descriptive of the component's use in system. A limit of 8 characters is allowed for most computers, e.g., work stations, CRAY, and IBM computers.

W2(A) Component type. Enter TMDPJUN to indicate a time-dependent junction component or the command DELETE. The command DELETE is allowed only in RESTART problems, and the component number must be an existing component at the time of restart. The DELETE command deletes the component.

For major edits, minor edits, and plot variables, the junction in the time-dependent junction component is numbered as CCC000000.

7.4.2 Card CCC0101, Time-Dependent Junction Geometry

This card is required for time-dependent junction components.

W1(I) <u>From</u> connection code to a component. This refers to the component <u>from</u> which the junction coordinate direction originates. An old or an expanded format can be used to connect volumes. In the old format (only allowed for connection <u>from</u> 1-D components), use CCC000000 if the connection is <u>from</u> the inlet side of the component and use CCC010000 if the connection is <u>from</u> the outlet side of the component. In the expanded format, the connection code for 1-D components is CCCXX000F [where CCC is the component number, XX is the volume number (greater than 00 and less than 100) for pipes/annuli/pressurizers, XX is 01 for all other 1-D components, and F indicates the face number], and the connection code for 3-D components is CCCXYYZZF [where CCC is the component number, X is the first coordinate direction (x or r) position number, YY is the second coordinate direction (y or θ) position number, ZZ is the third coordinate

direction (z) position number, and F indicates the face number]. A nonzero F specifies the expanded format. The number F equal to 1 and 2 specifies the inlet and outlet faces for the first coordinate direction (x or r), which is a 1-D volume's coordinate direction (x) (see Section 2.1). The number F equal to 3 through 6 specifies crossflow (y or z) for 1-D volumes. The number F equal to 3 and 4 would specify inlet and outlet faces for the second coordinate direction (y or θ); F equal to 5 and 6 would do the same for the third coordinate direction (z). For connecting from a time-dependent volume using the old format, both CCC000000 and CCC010000 are allowed. For connecting from a time-dependent volume using the expanded format, only the number F equal to 1 or 2 is allowed. Section 4.4 in this Appendix discusses this further.

W2(I) To connection code to a component. This refers to the component at which the junction coordinate direction ends. See the description for W1 above; use to instead of from.

W3(R) Junction flow area (m^2, ft^2). If zero, the junction flow area is set to the minimum volume flow area of the adjoining volumes. There are no junction flow area restrictions for time-dependent junctions.

W4(I) Junction control flags. This word has the packed format jefvcahs. It is not necessary to input leading zeros. This word is optional. If this word is not entered, jefvcahs is set to 00000000.

The digit j is not used and should be input as zero (j = 0). The jet junction model is not used.

The digit e specifies the modified PV term in the energy equations; e = 0 specifies that the modified PV term will not be applied, and e = 1 specifies the modified PV term will be applied.

The digit f is not used and should be input as zero (f = 0). The CCFL model is not used.

The digit v is not used and should be input as zero (v = 0). The stratification entrainment/pullthrough model is not used.

The digit c is not used and should be input as zero (c = 0). The choking model is not used.

The digit a is not used and should be input as zero (a = 0). The abrupt area change model is not used.

The digit h is not used and should be input as zero (h = 0). The homogeneous model is not used.

The digit s is not used and should be input as zero (s = 0). The momentum flux model is not used.

7.4.3 Card CCC0113, Time-Dependent Junction Face Placement Data

This card is optional. It is used to improve the graphical display of the hydrodynamic nodes. It is used to resolve problems with converging and diverging flows, that is, multiple junctions attached to the same face of a volume. With the standard input, each junction attached to the same face of a volume would be superimposed on the graphical display since each junction would be attached to the center of the volume face. For junctions with this card, the point of leaving the "from" volume and entering the "to" volume is allowed to be other than the center of the faces. The volume face is perpendicular to one of the coordinate directions. The attachment position is given by specifying the coordinates on the remaining two directions. Four words are entered on the card; two words for the coordinates for the "from" face, and two words for the two coordinates for the "to" face. The coordinates are entered in the order x, then y, then z, skipping the coordinate direction perpendicular to the face. The values are dimensionless. The actual coordinates are given by these values times the position change in moving from the volume center to the face in that direction. A value of 0.0 means no change from the center of the volume in that direction, and 1.0 means move to the edge of the volume in that direction. Positive or negative numbers can be entered, and the sign indicates moving in the positive or negative direction along that coordinate. A value greater than 1.0 can be used to get separation; the maximum allowed value is 25.0. The default is 0.0.

W1(R) First remaining coordinate value for the "from" face (dimensionless).

W2(R) Second remaining coordinate value for the "from" face (dimensionless).

W3(R) First remaining coordinate value for the "to" face (dimensionless).

W4(R) Second remaining coordinate value for the "to" face (dimensionless).

7.4.4 Card CCC0200, Time-Dependent Junction Data Control Word

This card is optional. If this card is missing, the second and third words of the time-dependent data are assumed to be velocities.

W1(I) Control word. If zero, the second and third words of the time-dependent junction data in Cards CCC0201 through CCC0299 are velocities. If one, the second and third words of the time-dependent junction data in Cards CCC0201 through CCC0299 are mass flow rates. In both cases, the fourth word is interface velocity and should be entered as zero.

W2(I) Table trip number. This word is optional. If missing or zero and Word 3 is missing, no trip is used, and the time argument is the advancement time. If nonzero and Word 3 is missing, this number is the trip number and the time argument is -1.0×10^{308} if the trip is false, and the advancement time minus the trip time if the trip is true. If zero and Word 3 is present,

no trip is used, and Word 3 and Word 4 are a variable request code that specifies the search argument for the table look up and interpolation.

W3(A) Alphanumeric part of variable request code. This quantity is optional. If not present, time is the search variable. If present, this word and the next are a variable request code that specifies the search argument for the table lookup and interpolation. If the trip number is zero, the specified argument is always used. If the trip number is nonzero, -1.0×10^{308} is used if the trip is false, and the specified argument is used if the trip is true. TIME can be selected, but note that the trip logic is different than if this word is omitted. The variable MFLOWJ should not be used as a search variable; a user-initialized control variable that uses MFLOWJ should be used instead (See Volume V).

W4(I) Numeric part of variable request code. This is assumed zero if missing.

7.4.5 Cards CCC0201 through CCC0299, Time-Dependent Junction Data

These cards are required for time-dependent junction components. A set of data consists of the search variable (e.g., time) followed by the required data indicated by control Word 1 on Card CCC0200. The card numbers need not be consecutive, but the value of the search variable in a succeeding set must be equal to or greater than the value in the previous set. One or more sets of data up to 5,000 sets, may be entered. Enter only the minimum number of words required. Linear interpolation is used if the search argument lies between the search variable entries. End-point values are used if the argument lies outside the table values. Only one set is needed if constant values are desired, and computer time is reduced when only one set is entered. Step changes can be accommodated by entering the two adjacent sets with the same search variable values or an extremely small difference between them. Given two identical argument values, the set selected will be the closest to the previous argument value. Sets may be entered one or more per card and may be split across cards. The total number of words must be a multiple of the set size. For large sets of data, continuation cards will be needed. The total number of words on a card and its continuation cards may not exceed 2,047.

Inputting time-dependent junction tables where the search variable is a thermodynamic variable from some other component can run into difficulties if the component number is such that the time-dependent junction is initialized before the component providing the needed search variable. This problem can be circumvented by always referencing lower-number components in a search variable. Another reliable fix for this is to make the search variable a control system output in the desired units, while the thermodynamic variable is the control system input in code internal (SI) units. The control system initial values can be set to the desired initial value of the search variable, and this will be used by the time-dependent table.

When doing a single-phase problem and entering velocities here, the same value should be entered for both liquid and vapor/gas velocities. When doing a single-phase problem and entering mass flow rates here, the correct value should be entered for either liquid or vapor/gas (whichever single-phase is being modeled) and the other entry should be zero.

If the user wants to specify the vapor/gas void fraction as a function of time in the time-dependent volume, and the total mass flow rate as a function of time in the time-dependent junction, then both the phasic (vapor/gas and liquid) mass flow rates must be calculated and entered in these cards.

A time dependent junction can be used to model either an in

flow or an outflow condition; however, care is required in modeling outflows. A time-dependent junction is analogous to a positive displacement pump in that the flow is independent of the system pressure. In the case of outflow, it is possible to specify a greater outflow than inflow to a volume or even outflow that will exhaust the volume. In this case, a numerical failure will result when the equivalent of a negative density is calculated. For this reason, modeling outflows using a time-dependent junction is not recommended.

W1(R) Search variable (e.g., time).

W2(R) Liquid velocity or liquid mass flow rate. This quantity is either velocity (m/s, ft/s) or mass flow rate (kg/s, lb_m/s), depending on control Word 1 of Card CCC0200.

W3(R) Vapor/gas velocity or vapor/gas mass flow rate. This quantity is either velocity (m/s, ft/s) or mass flow rate (kg/s, lb_m/s), depending on control Word 1 of Card CCC0200.

W4(R) Interface velocity (m/s, ft/s). Enter zero.

As described above, sets may be entered one or more per card.

7.5 Single Flexible Wall Component

7.5.1 Card CCC0000, Single Flexible Wall Name and Type

This card is required.

W1(A) Component name. Use a name descriptive of the component's use in system. A limit of 8 characters is allowed for most computers, e.g., work stations, CRAY, and IBM computers.

W2(A) Component type. Enter SNGLFW to indicate a single flexible wall component or the command DELETE. The command DELETE is allowed only in RESTART problems, and the component number must be an existing component at the time of restart. The DELETE command deletes the component.

The single flexible wall component is like a single-junction component, except there is no flow through the junction; only wall movement occurs at the junction location.

For major edits, minor edits, and plot variables, the flexible wall in the single flexible wall component is numbered as CCC000000.

7.5.2 Cards CCC0101 through CCC0109, Single Flexible Wall Geometry

This card (or cards) is required for single flexible wall components.

W1(I) From connection code to a component. This refers to the component from which the flexible wall coordinate direction originates. An old or an expanded format can be used to connect volumes. In the old format (only allowed for connection from 1-D components), use CCC000000 if the connection is from the "inlet" side of the component and use CCC010000 if the connection is from the "outlet" side of the component. In the expanded format, the connection code for 1-D components is CCCXX000F [where CCC is the component number, XX is the volume number (greater than 00 and less than 100) for 1-D pipes/annuli/pressurizers, XX is 01 for all other 1-D components, and F indicates the face number], and the connection code for 3-D components is CCCXYYZZF [where CCC is the component number, X is the first coordinate direction (x or r) position number, YY is the second coordinate direction (y or θ) position number, ZZ is the third coordinate direction (z) position number, and F indicates the face number]. A nonzero F specifies the expanded format. The number F equal to 1 and 2 specifies the inlet and outlet faces for the first coordinate direction (x or r), which is a 1-D volume's coordinate direction (x) (see Section 2.1 of Volume II of this manual). The number F equal to 3 through 6 specifies crossflow (y or z) for 1-D volumes. The number F equal to 3 and 4 would specify inlet and outlet faces for the second coordinate direction (y or θ); F equal to 5 and 6 would do the same for the third coordinate direction (z). Connecting from a time-dependent volume not allowed for the flexible wall component. Connecting to a time-dependent volume is allowed.

W2(I) To connection code to a component. This refers to the component at which the flexible wall coordinate direction ends. See the description for W1 above; use to instead of from. For a large external volume, use a time-dependent volume with a constant pressure.

W3(R) Flexible wall area (m^2, ft^2).

W4(R) General table number. The input argument for the table is the volume displacement on the from volume side of the component (m^3, ft^3). The function value in the table is the flexible wall stiffness (Pa/m^3, lb_f/in^2). For a solid wall, enter 0.0 for the stiffness in the table.

7.6 Pipe, Annulus, or Pressurizer Component

7.6.1 Card CCC0000, Pipe, Annulus, or Pressurizer Name and Type

This card is required.

W1(A) Component name. Use a name descriptive of the component's use in system. A limit of 8 characters is allowed for most computers, e.g., work stations, CRAY, and IBM computers.

W2(A) Component type. Enter PIPE to indicate a pipe component, ANNULUS to indicate an annulus component, PRIZER to indicate a pressurizer component, or the command DELETE. The command DELETE is allowed only in RESTART problems, and the component number must be an existing component at the time of restart. The DELETE command deletes the component.

The PIPE and ANNULUS components are similar, except that the ANNULUS component must be vertical and all the liquid is in the film (i.e., no drops) when in the annular mist flow regime. The ANNULUS component can be used to model a downcomer. The remaining input for both components is identical. The PRIZER component can be used to model a noncondensable driven pressurizer or a vapor/gas-liquid pressurizer; it requires additional input on Card CCC0001. More than one junction may be connected to the inlet or outlet of a PIPE, ANNULUS, or PRIZER. If an end has no junctions, that end is considered a closed end.

For major edits, minor edits, and plot variables, the volumes in the pipe or annulus or pressurizer component are numbered as CCCXX0000, where XX is the volume number (greater than 00 and less than 100). The junctions in the pipe or annulus or pressurizer component are numbered as CCCXX0000, where XX is the junction number (greater than 00 and less than 99).

The general input for a pipe or annulus or pressurizer component assumes that the pipe or annulus or pressurizer has at least two volumes with one junction separating the two volumes. It is possible to input a one-volume pipe or annulus or pressurizer. In order to implement this special case, the user must set the number of volumes and the volume number on the volume cards to one. In addition, the user should not input any of the junction cards.

The volumes in a pipe or annulus or pressurizer are usually considered one-dimensional components and flow in the volumes is along the x-coordinate. Crossflow junctions can connect to any of the pipe or annulus or pressurizer volumes in the y- and z-coordinate directions using a form of the momentum equation that does or does not include momentum flux terms. It is also possible to connect external junctions to the x-coordinate direction faces of any of the pipe or annulus or pressurizer volumes using a form of the momentum equation that does or does not include the momentum flux terms. It is also possible to include or not include the momentum flux terms in internal pipe or annulus or pressurizer junctions.

7.6.2 Card CCC0001, Pipe, Annulus, or Pressurizer Information

This card is required.

W1(I) Number of volumes, nv. This word is required for PIPE, ANNULUS, and PRIZER components. The number nv must be greater than zero and less than 100. The number of

associated junctions internal to these components is nv-1. The outer junctions are described by other components.

W2(I) Surgeline connection junction identifier of the junction connecting a volume of the pressurizer to the surgeline volume. This word is required for a PRIZER component and must not be entered for PIPE or ANNULUS components. This junction is not part of the PRIZER component. This word must have the same format as in the major edits, minor edits, and plot variables. The volume of the pressurizer must be the “from” volume, and the surgeline volume must be the “to” volume when specifying this surgeline connection junction connecting the two. Thus positive flow in the junction is out of the pressurizer component

W3(R) User-specified constant interfacial heat transfer coefficient for liquid (W/m^2-K, Btu/hr-ft^2-^oF) in the vertically stratified flow regime and the mixture level tracking flow regime. This word is optional for a PRIZER component and must not be entered for PIPE or ANNULUS components. If this word is less than or equal to zero, the interfacial heat transfer coefficient for liquid from the correlation is used. The default value is zero.

W4(R) User-specified constant interfacial heat transfer coefficient for vapor/gas (W/m^2-K, Btu/hr-ft^2-^oF) in the vertically stratified flow regime and the mixture level tracking flow regime. This word is optional for a PRIZER component and must not be entered for PIPE or ANNULUS components. If this word is less than or equal to zero, the interfacial heat transfer coefficient for vapor/gas from the correlation is used. The default value is zero.

W5(I) User-specified identifier for a multiplier on the code calculated fraction of the liquid in the film in the annular-mist flow regime. This word is optional for a PRIZER component and must not be entered for PIPE and ANNULUS components. A value of 1 through 999 indicates a general table of type REAC-T for use to specify the multiplier whose number is the entered number (Note: A general table of type REAC-T is used to prevent undesirable units conversion, since no British or SI units conversion is done for REAC-T entries). A value of 10001 through 19999 indicates the multiplier will be obtained from a control variable whose identification number is the entered number minus 10000. A value of zero means that the multiplier of 1.0 will be used. A value of zero from the table or control variable means that all of the available liquid is in droplets in the annular-mist flow regime. The default value is zero.

W6(I) User-specified identifier for a multiplier on the interfacial heat transfer coefficients for both liquid and vapor/gas in the vertically stratified flow regime and the mixture level tracking flow regime. This word is optional for the PRIZER component and may not be entered for PIPE and ANNULUS components. A value of 1 through 999 indicates a general table of type REAC-T for use to specify the multiplier (Note: A general table of type REAC-T is used to prevent undesirable units conversion, since no British or SI units

conversion is done for REAC-T entries). A value of 10001 through 19999 indicates the multiplier will be obtained from a control variable whose identification number is the entered value minus 10000. A value of zero means that a multiplier of 1.0 will be used. The default value is zero.

W7(I) Pressurizer spray droplet diameter. This word is optional for a PRIZER component and must not be entered for PIPE or ANNULUS components. This word specifies the droplet diameter in the annular-mist and mist flow regimes. A value of zero specifies that the value computed from the correlations in the code are to be used. The default value is zero.

W8(I) Pressurizer spray junction identifier of the junction connecting the sprayline volume to a volume of the pressurizer. This word is optional for a PRIZER component and must not be entered for PIPE or ANNULUS components. This junction is not part of the PRIZER component. This word must have the same format as in the major edits, minor edits, and plot variables. The volume of the pressurizer must be the “to” volume, and the sprayline volume must be the “from” volume when specifying this spray junction connecting the two. Thus, positive flow in the junction is into the pressurizer component. A non-zero value for this input activates the spray induced, enhanced condensation model in the vertical stratification and mixture level tracking flow regimes. These flow regimes are active for the pressurizer volume containing the liquid level. The default value is zero.

W9(R) Pressurizer spray mixing coefficient. This word is optional for a PRIZER component and must not be entered for PIPE or ANNULUS components. This word specifies the spray mixing coefficient used in the spray induced, enhanced condensation model. The default value is zero.

7.6.3 Card CCC0003, Pipe, Annulus, or Pressurizer Magnetohydrodynamics (MHD) Card

This card is optional. The card is needed to activate the MHD pressure drop effect for this component. SI units must be used for both input and output. This component must contain either the fluid lithium, lithium-lead, or NaK. The MHD model is discussed in Volume I, Section 3.4.12.

W1(R) Magnetic field (B-field) strength (Wb/m^2). This is the variable B in Volume I of the manual.

W2(R) Duct wall electrical conductivity ($ohm^{-1}m^{-1}$). This is the variable σ_w in Volume I of the manual.

W3(R) Duct wall thickness (m). This is the variable t in Volume I of the manual.

W4(I) Duct geometry type. This word is optional. For a circular duct, this word is 1. For a square duct, this word is 2. If this word is not entered, the default is 1.

W5(I) Fringe volume flag. This word is optional. A fringe volume uses a non-uniform (spatially-varying) magnetic field. The non-uniform field distribution is computed automatically from an internal submodel in the implementation of the MHD model. A non-fringe volume uses a uniform (constant) magnetic field. A fringe volume can only exist at the inlet or outlet end of the component. If the first component volume (inlet end) is a fringe volume, this word is -1. If the last component volume (outlet end) is a fringe volume, this word is +1. If both the first and last volumes (inlet and output end) are fringe volumes, this word is 2. If neither the first nor the last component volumes (inlet end and outlet ends) are fringe volumes, this word is 0. Each component fringe volume must have a length equal to 10 times the volume's half-width (within 1%). For a circular duct, the volume half-width is set equal to 1/2 the hydrodynamic diameter. For a square duct, the volume half-width is set equal to the square root of the flow area. If this word is not entered, the default is 0.

7.6.4 Cards CCC0101 through CCC0199, Pipe, Annulus, or Pressurizer X-Coordinate Volume Flow Areas

The format is two words per set in sequential expansion format for nv sets. These cards are required, and the card numbers need not be consecutive. The words for one set are

W1(R) Volume flow area in the x-direction (m^2, ft^2).

W2(I) Volume number.

7.6.5 Cards CCC1601 through CCC1699, Pipe, Annulus, or Pressurizer Y-Coordinate Volume Flow Areas

The format is two words per set in sequential expansion format for nv sets. These cards are optional and if entered activate the y-coordinate for each volume and allow the full one-dimensional momentum equations to be used in connections to the y-faces. The card numbers need not be consecutive. The words for one set are

W1(R) Volume flow area in the y-direction (m^2, ft^2). If these cards are missing, this y-direction volume flow area is computed from (volume of volume)/(y-direction length). The y-direction length is discussed in Cards CCC1801 through CCC1899.

W2(I) Volume number.

7.6.6 Cards CCC1701 through CCC1799, Pipe, Annulus, or Pressurizer Z-Coordinate Volume Flow Areas

The format is two words per set in sequential expansion format for nv sets. These cards are optional and if entered activate the z-coordinate for each volume and allow the full one-dimensional momentum

equations to be used in connections to the z-faces. The card numbers need not be consecutive. The words for one set are

W1(R) Volume flow area in the z-direction (m^2, ft^2). If these cards are missing, this z-direction volume flow area is computed from (volume of volume)/(z-direction length). The z-direction length is discussed in Cards CCC1901 through CCC1999.

W2(I) Volume number.

7.6.7 Cards CCC0201 through CCC0299, Pipe, Annulus, or Pressurizer Junction Flow Areas

These cards are optional, and, if entered, the card numbers need not be consecutive. The format is two words per set in sequential expansion format for nv-1 sets.

W1(R) Internal junction flow area in the x-direction (m^2, ft^2). If cards are missing or a word is zero, the junction flow area is set to the minimum volume flow area of the adjoining volumes. For abrupt area changes, the junction flow area must be equal to or less than the minimum of the adjacent volume flow areas. There is no restriction for smooth area changes.

W2(I) Junction number.

7.6.8 Cards CCC0301 through CCC0399, Pipe, Annulus, or Pressurizer X-Coordinate Volume Lengths

These cards are required. The format is two words per set in sequential expansion format for nv sets. Card numbers need not be consecutive.

W1(R) Volume length in the x-direction (m, ft).

W2(I) Volume number.

7.6.9 Cards CCC1801 through CCC1899, Pipe, Annulus, or Pressurizer Y-Coordinate Volume Lengths

These cards are optional and, if entered, activate the y-coordinate for each volume and allow the full one-dimensional momentum equation for connections to the y-faces. The format is two words per set in sequential expansion format for nv sets. Card numbers need not be consecutive.

W1(R) Volume length in the y-direction (m, ft). If these cards are missing and Cards CCC1601 through CCC1699 are missing, this y-direction length is computed from

$2.0 \bullet \left(\frac{\text{x – direction volume flow area}}{\pi}\right)^{0.5}$. If these cards are missing and Cards CCC1601 through CCC1699 are present, this y-direction length is computed from (volume of volume)/(y-direction flow area).

W2(I) Volume number.

7.6.10 Cards CCC1901 through CCC1999, Pipe, Annulus, or Pressurizer Z-Coordinate Volume Lengths

These cards are optional and, if entered, activate the z-coordinate for each volume and allow the full one-dimensional momentum equation for connections to the z-faces. The format is two words per set in sequential expansion format for nv sets. Card numbers need not be consecutive.

W1(R) Volume length in the z-direction (m, ft). If these cards are missing and Cards CCC1701 through CCC1799 are missing, this z-direction length is computed from $2.0 \bullet \left(\frac{\text{x – direction volume flow area}}{\pi}\right)^{0.5}$. If these cards are missing and Cards CCC1701 through CCC1799 are present, this z-direction length is computed from (volume of volume)/(z-direction volume flow area).

W2(I) Volume number.

7.6.11 Cards CCC2901 through CCC2999, Pipe, Annulus, or Pressurizer Elbow/Spiral Angle/Radius of Curvature and Inclination Angle

This section of input has been implemented, however the use of the input quantities in the code has only been implemented to modify the geometry. The use of the input quantities in the code has not yet been implemented to modify the physics.

These cards are optional and allow the description of a curved tube or spiral. The card format is three words per set in sequential expansion format for nv sets. Card numbers need not be consecutive.

W1(R) Angle of curved tube if a positive number (degrees) or radius of curvature (m, ft) if entered as a negative number. A zero indicates a straight section of the component. The angle of the curved pipe is the angle formed by the radius of curvature drawn from the center of the inlet face to the radius of curvature drawn from the center of the outlet face. The radius of curvature is a positive number; the minus sign is only to distinguish it from the angle input. Using ζ for the angle of curved component, r for the radius of curvature, and l for the volume length, these quantities are related by $l = r\varsigma\frac{\pi}{180}$.

For a straight component, the x-coordinate or normal flow direction of the volume is initially aligned along the space x-coordinate. A curved component is initially positioned in the horizontal r-θ plane, which coincides with the fixed x-y plane. The positive flow direction is in the counterclockwise azimuthal direction, and the radius of curvature extends from the r-θ origin to the center of the flow area. The inlet face is in the x-z plane. This initially aligned figure can then be rotated to the desired orientation for placement in the hydrodynamic system.

W2(R) Inclination angle (degrees). This angle is the inclination of a spiral. Entering zero specifies a curved component. Entering a nonzero specifies a spiral and this quantity is the angle of change in the fixed z coordinate. This number must be greater than or equal to 0.0 and less than 90.0.

W3(I) Volume number.

7.6.12 Cards CCC0401 through CCC0499, Pipe, Annulus, or Pressurizer Volume Volumes

The format is two words per set in sequential expansion format for nv sets. Card numbers need not be consecutive.

W1(R) Volume (m^3, ft^3). If these cards are missing, volumes equal to zero are assumed. The code requires that each volume equal the x-direction flow area times the x-direction length. If activated, the code also requires each volume equal the y-direction flow area times the y-direction length, and each volume equal the z-direction flow area times the z-direction length. For any volume, at least two of the three quantities, x-direction area, the x-direction length, or volume, must be nonzero. If one of the quantities is zero, it will be computed from the other two. If none of the quantities are zero, the volume must equal the x-direction area times the x-direction length within a relative error of 0.000001. The same relative error check is done for the y- and z-directions. If both the y-direction area and y-direction length are not entered or are zero, the y-direction length is computed from $2.0 \bullet \left(\frac{\text{x – direction flow area}}{\pi}\right)^{0.5}$ and the y-direction flow area is computed from $\frac{\text{volume of volume}}{\text{y-direction length}}$. The same is true for the z-direction.

W2(I) Volume number.

7.6.13 Cards CCC0501 through CCC0599, Pipe, Annulus, or Pressurizer Volume Azimuthal Angles

These cards are optional, and, if not entered, the angles are set to zero. The format is two words per set in sequential expansion format for nv sets, and card numbers need not be consecutive.

W1(R) Azimuthal (horizontal) angle (degrees). The absolute value of this angle must be ≤ 360 degrees and is defined as a positional quantity. This angle is in the horizontal x-y plane. The angle 0 degrees is on the x axis, and the angle 90 degrees is on the y axis. Positive angles are rotated from the x axis toward the y axis. This quantity is not used in the calculation but is specified for automated drawing of nodalization diagrams.

W2(I) Volume number.

7.6.14 Cards CCC0601 through CCC0699, Pipe, Annulus, or Pressurizer Volume Inclination Angles

These cards are required. The format is two words per set in sequential expansion format for nv sets, and card numbers need not be consecutive.

W1(R) Inclination (vertical) angle (degrees). The absolute value of this angle must be ≤ 90 degrees The angle 0 degrees is horizontal; positive angles have an upward direction, i.e., the inlet is at a lower elevation. This angle is used in the flow regime determination, in the interphase drag calculation, and for automated drawing of nodalization diagrams. When the absolute value of the inclination (vertical) angle is less than or equal to 30 degrees, the horizontal flow regime map is used. When the absolute value of the inclination (vertical) angle is greater than or equal to 60 degrees, the vertical flow regime is used. Between 30 and 60 degrees, interpolation is used.

W2(I) Volume number.

7.6.15 Cards CCC0701 through CCC0799, Pipe, Annulus, or Pressurizer Volume X-Coordinate Position or Elevation Changes

These cards are optional. If these cards are missing, the x-coordinate position changes or elevation changes are computed from the x-coordinate volume length and a rotation matrix computed from the angle information. If these cards are entered, the entered data becomes the x-coordinate position change or elevation change data. The card format is two words per set in sequential expansion format up to nv sets, and card numbers need not be consecutive.

W1(R) Elevation change. This is the coordinate position change along the fixed z-axis due to the traverse from inlet to outlet along the local x-coordinate, Δ_{zx} (m, ft). A positive value is an increase in elevation. The absolute value of this quantity must be less than or equal to the volume length. If the inclination (vertical) angle is zero, this quantity must be zero. If the inclination (vertical) angle is nonzero, this quantity must be nonzero and have the same sign. The elevation change is used in the gravity head and checking loop closure. See Section 2.4.1 of Volume II of the manual for further discussion. A calculated elevation angle is determined by the arcsin of the ratio of the elevation change (this word) and the

volume length (Word 1 on Cards CCC0301 through CCC0309). This calculated elevation angle is used in the additional stratified force term.

W2(I) Volume number.

7.6.16 Cards CCC2101 through CCC2199, Pipe, Annulus, or Pressurizer Volume Y-Coordinate Position Changes

These cards are optional. If these cards are missing, the y-coordinate position changes are computed from the y-coordinate volume length. If these cards are entered, the entered data overwrites the previously computed y-coordinate position change data. The card format is four words per set in sequential expansion format up to nv sets, and card numbers need not be consecutive.

W1(R) This word is not used. Enter 0.

W2(R) This word is not used. Enter 0.

W3(R) Position change along the fixed z-axis due to traverse from inlet to outlet along the local y-coordinate, Δ_{zy} (m, ft). See Figures in Volume II, Section 2.1 of the manual.

W4(I) Volume number.

7.6.17 Cards CCC2201 through CCC2299, Pipe, Annulus, or Pressurizer Volume Z-Coordinate Position Changes

These cards are optional. If these cards are missing, the z-coordinate position changes are computed from the z-coordinate volume length. If these cards are entered, the entered data overwrites the previously computed z-coordinate position change data. The card format is four words per set in sequential expansion format up to nv sets, and card numbers need not be consecutive.

W1(R) This word is not used. Enter 0.

W2(R) This word is not used. Enter 0.

W3(R) Position change along the fixed z-axis due to traverse from inlet to outlet along the local z-coordinate, Δ_{zz} (m, ft). See Figures in Volume II, Section 2.1 of the manual.

W4(I) Volume number.

7.6.18 Cards CCC0801 through CCC0899, Pipe, Annulus, or Pressurizer Volume X-Coordinate Friction Data

These cards are required. The card format is three words per set for nv sets, and card numbers need not be consecutive.

W1(R) Wall roughness in the x-direction (m, ft). The x-direction wall roughness is limited to be greater than or equal to 1.0×10^{-9} times the x-direction hydraulic diameter. If zero, the x-direction wall roughness is computed from 1.0×10^{-9} times the x-direction hydraulic diameter.

W2(R) Hydraulic diameter in the x-direction (m, ft). This should be computed from $4.0 \bullet \left(\frac{\text{x-direction volume flow area}}{\text{x-direction wetted perimeter}}\right)$. If zero, the x-direction hydraulic diameter is computed from $2.0 \bullet \left(\frac{\text{x-direction volume flow area}}{\pi}\right)^{0.5}$. A check is made to ensure that the wall roughness in the x-direction is less than half the x-direction hydraulic diameter. See Word 1 on Cards CCC0101 through CCC0109 for the x-direction volume flow area.

W3(I) Volume number.

7.6.19 Cards CCC2301 through CCC2399, Pipe, Annulus, or Pressurizer Volume Y-Coordinate Friction Data

These cards are required if the volume flow area or volume length data was entered for the y-coordinate. If the cards are not entered, the y-direction wall roughness defaults to zero and the default y-direction hydraulic diameter is computed from $4.0 \bullet \frac{\text{y – direction volume flow area}}{(\pi \bullet \text{x – direction volume flow area})^{0.5}}$. See Section 2.4 of this volume of the manual. The card format is three words per set for nv sets, and card numbers need not be consecutive.

W1(R) Wall roughness in the y-direction (m, ft). The y-direction wall roughness is limited to be greater than or equal to 1.0×10^{-9} times the y-direction hydraulic diameter. If zero, the y-direction wall roughness is computed from 1.0×10^{-9} times the y-direction hydraulic diameter.

W2(R) Hydraulic diameter in the y-direction (m, ft). This should be computed from $4.0 \bullet \left(\frac{\text{y–direction volume flow area}}{\text{y–direction wetted perimeter}}\right)$. If zero, the y-direction hydraulic diameter is computed from $4.0 \bullet \frac{\text{y–direction volume flow area}}{(\pi \bullet \text{x – direction volume flow area})^{0.5}}$. See Section 2.4 of this volume of the manual. A check is made to ensure that the y-direction wall roughness is less than half the y-direction hydraulic diameter. See Word 1 on cards CCC1601 through CCC1699 for the y-direction volume flow area.

W3(R) Volume number.

7.6.20 Cards CCC2401 through CCC2499, Pipe, Annulus, or Pressurizer Volume Z-Coordinate Friction Data

These cards are required if the volume flow area or volume length data was entered for the z-coordinate. If the cards are not entered, the z-direction wall roughness defaults to zero and the z-direction default hydraulic diameter is computed from $4.0 \bullet \frac{\text{z – direction volume flow area}}{(\pi \bullet \text{x – direction volume flow area})^{0.5}}$. See Section 2.4 of this volume of the manual. The card format is three words per set for nv sets, and card numbers need not be consecutive.

W1(R) Wall roughness in the z-direction (m, ft). The z-direction wall roughness is limited to be greater than or equal to 1.0×10^{-9} times the z-direction hydraulic diameter. If zero, the z-direction wall roughness is computed from 1.0×10^{-9} times the z-direction hydraulic diameter.

W2(R) Hydraulic diameter in the z-direction (m, ft). This should be computed from $4.0 \bullet \left(\frac{\text{z–direction volume flow area}}{\text{z–direction wetted perimeter}}\right)$. If zero, the z-direction hydraulic diameter is computed from $4.0 \bullet \frac{\text{z–direction volume flow area}}{(\pi \bullet \text{x – direction volume flow area})^{0.5}}$. See Section 2.4 of this volume of the manual. A check is made to ensure that the z-direction wall roughness is less than half the z-direction hydraulic diameter. See Word 1 on cards CCC1701 through CCC1799 for the z-direction volume flow area.

W3(R) Volume number.

7.6.21 Cards CCC2501 through CCC2599, Pipe, Annulus, or Pressurizer Volume Additional Wall Friction

These cards are optional. If these cards are not entered, the default values are 1.0 for the laminar wall friction shape factor and 0.0 for the wall friction factor heated wall effect viscosity ratio exponent. The card format is seven words per set in sequential expansion format for nv sets and card numbers need not be consecutive. A description of this input is presented in Section 3 of Volume I.

W1(R) Wall friction shape factor for coordinate direction 1.

W2(R) Wall friction factor heated wall effect viscosity ratio exponent for coordinate direction 1.

W3(R) Wall friction shape factor for coordinate direction 2.

W4(R) Wall friction factor heated wall effect viscosity ratio exponent for coordinate direction 2.

W5(R) Wall friction shape factor for coordinate direction 3.

W6(R) Wall friction factor heated wall effect viscosity ratio exponent for coordinate direction 3.

W7(I) Volume number.

7.6.22 Cards CCC2601 through CCC2699, Pipe, Annulus, or Pressurizer Volume Alternate Turbulent Wall Friction

These cards are optional. These cards allow the specification of user-defined turbulent wall friction factors for selected volumes and coordinate directions (see Volume I, Section 3.3.8.6). The user-defined turbulent wall friction factor has the form $f = A + B(Re)^{-C}$ where A, B, and C are entered for each coordinate of each volume and Re is the volume Reynolds number for the appropriate coordinate and appropriate phase. If these cards are not entered, the standard turbulent wall friction factor is used for all coordinates of all volumes. If the cards are entered, the standard turbulent wall friction factor can be selected for a particular volume and coordinate direction by entering zeros for the three quantities. The card format is ten words per set in sequential expansion format for nv sets and card numbers need not be consecutive.

W1(R) A for coordinate direction 1.

W2(R) B for coordinate direction 1.

W3(R) C for coordinate direction 1.

W4(R) A for coordinate direction 2.

W5(R) B for coordinate direction 2.

W6(R) C for coordinate direction 2.

W7(R) A for coordinate direction 3.

W8(R) B for coordinate direction 3.

W9(R) C for coordinate direction 3.

W10(I) Volume number.

7.6.23 Cards CCC0901 through CCC0999, Pipe, Annulus, or Pressurizer Junction Loss Coefficients

These cards are optional and if missing, the energy loss coefficients are set to zero. The card format is three words per set in sequential expansion format for nv-1 sets, and card numbers need not be consecutive.

W1(R) Reynolds number independent forward flow energy loss coefficient, A_F. This quantity will be used in each of the phasic momentum equations when the junction velocity of that phase is positive or zero. Note: a variable loss coefficient may be specified (see Section 7.6.33 of this Appendix). The interpretation and use of the coefficient depends on whether the smooth or abrupt area change option is specified or grid spacers are modeled (see Section 2.4.1 of Volume II of this manual). This quantity must be greater than or equal to zero. See Section 5.6 of Volume V for more information.

W2(R) Reynolds number independent reverse flow energy loss coefficient, A_R. This quantity will be used in each of the phasic momentum equations when the junction velocity of that phase is negative. Note: a variable loss coefficient may be specified (see Section 7.6.33 of this Appendix). The interpretation and use of the coefficient depends on whether the smooth or abrupt area change option is specified or grid spacers are modeled (see Section 2.4.1 of Volume II of this manual). This quantity must be greater than or equal to zero. See Section 5.6 of Volume V for more information.

W3(I) Junction number.

7.6.24 Cards CCC1001 through CCC1099, Pipe, Annulus, or Pressurizer Volume X-Coordinate Control Flags

These cards are required. The card format is two words per set in sequential expansion format for nv sets, and card numbers need not be consecutive.

W1(I) Volume control flags. This word has the packed format tlpvbfe. It is not necessary to input leading zeros. Volume flags consist of scalar oriented and coordinate direction oriented flags. Only one value for a scalar oriented flag is entered per volume but up to three coordinate oriented flags can be entered for a volume, one for each coordinate direction. At present, the f flag is the only coordinate direction oriented flag. These words enter the scalar oriented flags and the x-coordinate flags for each volume in the component.

. The digit t specifies whether the thermal stratification model is to be used; t = 0 specifies that the thermal stratification model is not to be used for the volume, and t = 1 specifies that the thermal stratification model is to be used for the volume. The thermal stratification model can only be applied to vertically-oriented components.

The digit l specifies whether the mixture level tracking model is to be used; l = 0 specifies that the mixture level tracking model not be used for the volume, and l = 1 specifies that the mixture level tracking model be used for the volume. The mixture level tracking model can only be applied to vertically-oriented components.

The digit p specifies whether the water packing scheme is to be used; p = 0 specifies that the water packing scheme is to be used for the volume, and p = 1 specifies that the water

packing scheme is not to be used for the volume. The water packing scheme is recommended when modeling a pressurizer. The water packing scheme is only applied to vertically oriented volumes.

The digit v specifies whether the vertical stratification model is to be used; v = 0 specifies that the vertical stratification model is to be used for the volume, and v = 1 specifies that the vertical stratification model is not to be used for the volume. The vertical stratification model is recommended when modeling a pressurizer. The vertical stratification model is only applied to vertically oriented volumes.

The digit b specifies the interphase friction that is used; b = 0 specifies that the pipe interphase friction model will be applied, b = 1 specifies that the rod bundle interphase friction model will be applied, and b = 2 specifies that the ORNL ANS narrow channel model will be applied (Cards CCC3101 through CCC3199 required). The b = 1 option and the b = 2 option are only applied to vertically oriented volumes.

The digit f specifies whether wall friction is to be computed; f = 0 specifies that wall friction effects are to be computed along the x-coordinate of the volume, and f = 1 specifies that wall friction effects are not to be computed along the x-coordinate of the volume.

The digit e specifies if nonequilibrium or equilibrium is to be used; e = 0 specifies that a nonequilibrium (unequal temperature) calculation is to be used, and e = 1 specifies that an equilibrium (equal temperature) calculation is to be used. Equilibrium volumes should not be connected to nonequilibrium volumes. The equilibrium option is provided only for comparison to other codes.

W2(I) Volume number.

7.6.25 Cards CCC2701 through CCC2799, Pipe, Annulus, or Pressurizer Volume Y-Coordinate Control Flags

W1(I) Volume control flags. This word has the general packed format tlpvbfe, but this word is limited to 00000f0 since it only enters the coordinate oriented flags for the y-direction.

The digit f specifies whether wall friction is to be computed; f = 0 specifies that wall friction effects are to be computed along the y-coordinate direction of the volume, and f = 1 specifies that wall friction effects are not to be computed along the y-coordinate direction of the volume.

W2(I) Volume number.

7.6.26 Cards CCC2801 through CCC2899, Pipe, Annulus, or Pressurizer

Volume Z-Coordinate Control Flags

W1(I) Volume control flags. This word has the general packed format tlpvbfe, but this word is limited to 00000f0 since it only enters the coordinate oriented flags for the z-direction.

The digit f specifies whether wall friction is to be computed; f = 0 specifies that wall friction effects are to be computed along the z-coordinate direction of the volume, and f = 1 specifies that wall friction effects are not to be computed along the z-coordinate direction of the volume.

W2(I) Volume number.

7.6.27 Cards CCC1101 through CCC1199, Pipe, Annulus, or Pressurizer Junction Control Flags

These cards are required. The card format is two words per set in sequential expansion format for nv-1 sets, and card numbers need not be consecutive.

W1(I) Junction control flags. This word has the packed format jefvcahs. It is not necessary to input leading zeros.

The digit j is not used and should be input as zero (j = 0). The jet junction model is not used.

The digit e specifies the modified PV term in the energy equations; e = 0 specifies that the modified PV term will not be applied, and e = 1 specifies that the modified PV term will be applied.

The digit f specifies CCFL options; f = 0 specifies that the CCFL model will not be applied, and f = 1 specifies that the CCFL model will be applied.

The digit v is not used and should be input as zero (v = 0). The horizontal stratification entrainment/pullthrough model cannot be used.

The digit c specifies choking options; c = 0 specifies that the standard choking model will be applied, c = 1 specifies that neither choking model will be applied, and c = 2 specifies that the modified Henry-Fauske choking model will be applied.

The digit a specifies area change options (see Volume II, Section 2.4.1 and Volume V, Section 4.6.3); a = 0 specifies either a smooth area change or no area change, a = 1 specifies the full abrupt area change model (code-calculated K_{loss}, area apportioning at a branch, restricted junction area, and extra interphase drag), and a = 2 specifies the partial abrupt area change model (no code-calculated K_{loss}, but includes area apportioning at a

branch, restricted junction area, and extra interphase drag). It is recommended that the abrupt area change model (a = 1 or a = 2) be used at branches.

The digit h specifies nonhomogeneous or homogeneous; h = 0 specifies the nonhomogeneous (two-velocity momentum equations) option, and h = 1 or 2 specifies the homogeneous (single-velocity momentum equation) option. For the homogeneous option (h = 1 or 2), the major edit printout will show a one.

The digit s specifies momentum flux options; s = 0 specifies momentum flux in both the to volume and the from volume, s = 1 specifies momentum flux in the from volume but not in the to volume, s = 2 specifies momentum flux in the to volume but not in the from volume. s = 3 specifies no momentum flux in either the to or the from volume. For this component, the option s = 0 is the usual recommendation (momentum flux in both volumes). The other options s = 1, 2, and 3 are included to allow consistency for this flag for other components (single-junction, branch junction, etc.).

W2(I) Junction number.

7.6.28 Cards CCC1201 through CCC1299, Pipe, Annulus, or Pressurizer Volume Initial Conditions

These cards are required. The card format is seven words per set in sequential expansion format for nv sets, and card numbers need not be consecutive.

W1(I) Control word. This word has the packed format εbt. It is not necessary to input leading zeros.

The digit ε specifies the fluid, where ε = 0 is the default fluid. The value for ε > 0 corresponds to the position number of the fluid type indicated on the 120 - 129 cards (i.e., ε = 1 specifies H_2O, ε = 2 specifies D_2O, etc.). The default fluid is that set for the hydrodynamic system by Cards 120 through 129 or this control word in another volume in this hydrodynamic system. The fluid type set on Cards 120 through 129 or these control words must be consistent (i.e., not specify different fluids). If Cards 120 through 129 are not entered and all control words use the default ε = 0, then H_2O is assumed as the fluid.

The digit b specifies whether boron is present or not. The digit b = 0 specifies that the volume liquid does not contain boron; b = 1 specifies that a boron concentration in mass of boron per mass of liquid (which may be zero) is being entered after the other required thermodynamic information.

The digit t specifies how the following words are to be used to determine the initial thermodynamic state. Entering t equal to 0 through 3 specifies one component

(vapor/liquid). Entering t equal to 4, 5, 6, or 8 allows the specification of two components (vapor/liquid and noncondensable gas).

With options t equal to 4, 5, 6, or 8, the names of the components of the noncondensable gas must be entered on Card 110, and the mass fractions of the components of the noncondensable gas are entered on Card 115. (if more than 1 noncondensable component is specified on Card 110). Cards CCC3201-CCC3299 may also be used for the mass fractions of the components of the noncondensable gas.

If t = 0, the next four words are interpreted as pressure (Pa, lb_f/in^2), liquid specific internal energy (J/kg, Btu/lb_m), vapor/gas specific internal energy (J/kg, Btu/lb_m), and vapor/gas void fraction. These quantities will be interpreted as nonequilibrium or equilibrium conditions, depending on the specific internal energies used to define the thermodynamic state. W6 should be 0.0.

If t = 1, the next two words are interpreted as temperature (K, ^oF) and static quality in equilibrium condition. W4, W5, and W6 should be 0.0.

If t = 2, the next two words are interpreted as pressure (Pa, lb_f/in^2) and static quality in equilibrium condition. W4, W5, and W6 should be 0.0.

If t = 3, the next two words are interpreted as pressure (Pa, lb_f/in^2) and temperature (K, ^oF) in nonequilibrium or equilibrium conditions depending on the pressure and temperature used to define the thermodynamic state. W4, W5, and W6 should be 0.0.

The following options are used for input of noncondensable states. In all cases, the criteria used for determining the range of values for static quality are;

1. 1.0E-9 $\leq$ static quality $\leq$ 0.99999999, two-phase conditions

2. static quality < 1.0E-9 or static quality > 0.99999999, single-phase conditions.

The static quality is given by $M_g/(M_g + M_f)$, where $M_g = M_s + M_n$. Section 3.2 of Volume I of the manual discusses this further.

Noncondensable options are as follows:

If t = 4, the next three words are interpreted as pressure (Pa, lb_f/in^2), temperature (K, ^oF), and static quality in equilibrium condition. Using this input option with static quality > 0.0 and $\leq$ 1.0, saturated noncondensables (100% relative humidity) will result. W5 and W6 should be 0.0. The temperature is restricted to be less than the saturation temperature at the input pressure and less than the critical temperature; otherwise an input error will occur.

Setting static quality to 0.0 is used as a flag that will initialize the volume to all noncondensable (dry noncondensable, 0% relative humidity) with no temperature restrictions. Static quality is reset to 1.0 using this dry noncondensable option.

If t = 5, the next three words are interpreted as temperature (K, ^{o}F), static quality, and noncondensable quality in equilibrium condition. Both the static and noncondensable qualities are restricted to be between 1.0E-9 and 0.99999999. W5 and W6 should be 0.0. Little experience has been obtained using this option, and it has not been checked out.

If t = 6, the next five words are interpreted as pressure (Pa, lb_f/in^2), liquid specific internal energy (J/kg, Btu/lb_m), vapor/gas specific internal energy (J/kg, Btu/lb_m), vapor/gas void fraction, and noncondensable quality. These quantities will be interpreted as nonequilibrium or equilibrium conditions depending on the specific internal energies used to define the thermodynamic state. This option can be used to set the relative humidity to less than or equal to 100%. The combinations of vapor/gas void fraction and noncondensable quality must be thermodynamically consistent. If the noncondensable quality is set to 0.0, noncondensables are not present and the input processing branches to that type of processing (t = 0). For this situation, Card 110 must be entered, and Card 115 must be entered if more than 1 noncondensable component is specified on Card 110. If noncondensables are present (noncondensable quality greater than 0.0), then the vapor/gas void fraction must also be greater than 0.0. If the noncondensable quality is set to 1.0 (pure noncondensable, 0% relative humidity), then the vapor/gas void fraction must also be 1.0. When both the vapor/gas void fraction and the noncondensable quality are set to 1.0, the volume temperature is calculated from the noncondensable energy equation using the input vapor/gas specific internal energy.

If t = 8, the next five words are interpreted as pressure (Pa, lb_f/in^2), liquid temperature (K, ^{o}F), vapor/gas temperature (K, ^{o}F), vapor/gas void fraction, and noncondensable quality. These quantities will be interpreted as nonequilibrium or equilibrium conditions depending on the temperatures used to define the thermodynamic state. This option can be used to set the relative humidity to less than or equal to 100%. The combinations of vapor/gas void fraction and noncondensable quality must be thermodynamically consistent. If the noncondensable quality is set to 0.0, noncondensables are not present and the input processing branches to that type of processing. For this situation, Card 110 must be entered, and Card 115 must be entered if more than 1 noncondensable component is specified on Card 110. If noncondensables are present (noncondensable quality greater than 0.0), then the vapor/gas void fraction must also be greater than 0.0. If the noncondensable quality is set to 1.0 (pure noncondensable, 0% relative humidity), then the vapor/gas void fraction must also be 1.0. When both the vapor/gas void fraction and the noncondensable quality are set to 1.0, the volume specific internal energy is calculated from the noncondensable energy equation using the input vapor/gas temperature.

W2-W6(R) Quantities as described under Word 1. Five quantities must be entered, and zeros should be entered for unused quantities. If any control word (Word 1) indicates that boron is present, Cards CCC2001 through CCC2099 must be entered to define the initial boron concentrations. Boron concentrations are not entered in Words 2 through 6.

W7(I) Volume number.

7.6.29 Cards CCC2001 through CCC2099, Pipe, Annulus, or Pressurizer Initial Boron Concentrations

These cards are required only if boron is specified in one of the control words (Word 1) in Cards CCC1201 through CCC1299. The card format is two words per set in sequential expansion format for nv sets. Boron concentrations must be entered for each volume, and zero should be entered for those volumes whose associated control word did not specify boron.

W1(R) Boron concentration (mass of boron per mass of liquid).

W2(I) Volume number.

7.6.30 Card CCC1300, Pipe, Annulus, or Pressurizer Junction Conditions Control Words

This card is optional, and, if missing, velocities are assumed on Cards CCC1301 through CCC1399.

W1(I) Control word. If zero, the first and second words of each set on Cards CCC1301 through CCC1399 are velocities. If one, the first and second words of each set on Cards CCC1301 through CCC1399 are mass flow rates.

7.6.31 Cards CCC1301 through CCC1399, Pipe, Annulus, or Pressurizer Junction Initial Conditions

W1(R) Initial liquid velocity or initial liquid mass flow rate (velocity in m/s, ft/s or mass flow rate in kg/s, lb_m/s), depending on control Word 1 of Card CCC1300.

W2(R) Initial vapor/gas velocity or initial vapor/gas mass flow rate (velocity in m/s, ft/s or mass flow rate in kg/s, lb_m/s), depending on control Word 1 of Card CCC1300.

W3(R) Interface velocity (m/s, ft/s). Enter zero.

W4(I) Junction number.

7.6.32 Cards CCC1401 through CCC1499, Pipe, Annulus, or Pressurizer

Junction Diameter and CCFL Data

These cards are optional. The defaults indicated for each word are used if the card is not entered. If this card is being used to specify only the junction hydraulic diameter for the interphase drag calculation, (i.e., f = 0 in Word 1 of Cards CCC1101 through CCC1199) then the diameter should be entered in Word 1 and any allowable values should be entered in Words 2 through 4 (will not be used). If this card is being used for the CCFL model (i.e., f = 1 in Word 1 of Cards CCC1101 through CCC1199), then enter all four words for the appropriate CCFL model if values different from the default value are desired.

W1(R) Junction hydraulic diameter, D_j (m, ft). This quantity is the junction hydraulic diameter used in the CCFL correlation equation, interphase drag, and form loss Reynolds number. This number must be $\geq$ 0. The number should be computed from $4.0 \bullet \left(\frac{\text{junction area}}{\text{wetted perimeter}}\right)$. If a zero is entered or if the default is used, the junction diameter is computed from $2.0 \bullet \left(\frac{\text{junction area}}{\pi}\right)^{0.5}$. See Word 1 of Cards CCC0201 through CCC0299 for the junction area.

W2(R) Flooding correlation form, β. If zero, the Wallis CCFL form is used. If one, the Kutateladze CCFL form is used. If between zero and one, Bankoff weighting between the Wallis and Kutateladze CCFL forms is used. This number must be $\geq$ 0 and $\leq$ 1. The default value is 0 (Wallis form). See Section 3 of Volume I for details of the model.

W3(R) Vapor/gas intercept, c. This quantity is the vapor/gas intercept used in the CCFL correlation (when $H_f^{1/2} = 0$) and must be > 0. The default value is 1.

W4(R) Slope, m. This quantity is the slope used in the CCFL correlation and must be > 0. The default value is 1.

W5(I) Junction number.

7.6.33 Card CCC3001 through CCC3099, Pipe, Annulus, or Pressurizer Junction Form Loss Data

These cards are optional. The user-specified form loss coefficients are given in Words 1 and 2 of Cards CCC0901 through CCC0999 if these cards are not entered. If these cards are entered, the form loss coefficients depend on the flow conditions and are calculated from

$$K_F = A_F + B_F Re^{-C_F}$$

$$K_R = A_R + B_R Re^{-C_R}$$

where K_F and K_R are the forward and reverse form loss coefficients; A_F, A_R, B_F, B_R, C_F, and C_R are user-specified constants. A_F and A_R are Words 1 and 2 of Cards CCC0901 through CCC0999; B_F, B_R, C_F, and C_R are Words 1, 2, 3, and 4 on these cards (CCC3001 through CCC3099); and Re is the junction Reynolds number based on mixture fluid properties. If these cards are being used for the form loss calculations, then enter all five words for the appropriate expression.

W1(R) B_F (≥ 0). This quantity must be greater than or equal to zero.

W2(R) C_F (≥ 0). This quantity must be greater than or equal to zero.

W3(R) B_R (≥ 0). This quantity must be greater than or equal to zero.

W4(R) C_R (≥ 0). This quantity must be greater than or equal to zero.

W5(I) Junction number.

7.6.34 Cards CCC3101 through CCC3199, Pipe, Annulus, or Pressurizer Volume ORNL ANS Interphase Model Pitch and Span Values

These cards are required if any of the interphase friction flags b in the volume control flags entered on Cards CCC1001 through CCC1099 are set to 2 (ORNL ANS narrow channel model).

W1(R) Pitch (gap, channel width perpendicular to flow), short dimension (m, ft).

W2(R) Span (channel length perpendicular to flow), long dimension (m, ft).

W3(I) Volume number.

7.6.35 Cards CCC3201 through CCC3299, Pipe, Accumulator, or Pressurizer Volume Noncondensable Mass Fractions.

These cards are optional. If omitted, the noncondensable mass fractions are obtained from the noncondensable mass fractions entered on Card 115.

W1-W5(R) Mass fractions for the noncondensable species entered on Card 110. Five quantities must be entered, and zeros should be entered for species not present in the volumes. The noncondensable mass fractions must sum to 1.0 within a relative error of 1.0×10^{-10}.

W6(I) Volume number.

7.7 Branch, Separator, Jetmixer, Turbine, Feedwater Heater, or ECC

Mixer Component

7.7.1 Card CCC0000, Branch, Separator, Jetmixer, Turbine, Feedwater Heater, or ECC Mixer Name and Type

This card is required.

W1(A) Component name. Use a name descriptive of the component's use in system. A limit of 8 characters is allowed for most computers, e.g., work stations, CRAY, and IBM computers.

W2(A) Component type. Enter BRANCH to indicate a branch component, SEPARATR to indicate a separator component, JETMIXER to indicate a jetmixer component, TURBINE to indicate a turbine component, FWHTR to indicate a feedwater heater component, ECCMIX to indicate an ECC mixer component, or the command DELETE. The command DELETE is allowed only in RESTART problems, and the component number must be an existing component at the time of restart. The DELETE command deletes the component.

In junction references using the old format, the code for the component inlet is CCC000000 and the code for the component outlet is CCC010000. In the junction references using the expanded format, the connection code is CCCXX000F, where CCC is the component number, XX is the volume number, and F is the face number. More than one junction may be connected to the inlet or outlet. If an end has no junctions, that end is considered a closed end. Normally, only a branch has more than one junction connected to a volume end. Multiple junctions may connect to the ends of pipes and single-volumes, except that a warning message is issued even though the connections are handled correctly. Limiting multiple connections to branch components allows the warning message to indicate probable input error. If more than one junction is connected on one end of a branch, each junction should be modeled as an abrupt area change. For major edits, minor edits, and plot variables, the volume in the branch component is numbered as CCC010000. The junctions associated with the branch component are numbered as CCCMM0000, where MM is the junction number (greater than 00 and less than 10).

A separator (SEPARATR) component is a specialized branch component having three junctions. The number of junctions, nj, defined below, must be three, and no junctions in other components may connect to this component. The variable N defined below must have values of 1, 2, and 3. For the junctions, N = 1 is the vapor/gas outlet, N = 2 is the liquid fall back, and N = 3 is the separator inlet. The <u>from</u> part for the vapor/gas outlet junction must refer to the x-coordinate outlet face of the separator for the old format (CCC010000) or must refer to any of the 6 volume faces of the separator except the x-coordinate inlet face for the expanded format (CCC010002 through CCC010006). The <u>from</u> part for the liquid return junction must refer to the x-coordinate inlet face of the separator for the old format (CCC000000) or must refer to any of the 6 volume faces of the separator except the x-coordinate outlet face for the expanded format (CCC010001, CCC010003 through CCC010006). The separator inlet junction must be connected to the x-coordinate inlet face of the separator for the old format (CCC000000) or must be connected to any of the 6 volume faces of the separator except the x-coordinate outlet face for the expanded format (CCC010001, CCC010003 through CCC010006). To include the direct path from a steam generator downcomer to the

steam dome, a bypass volume is recommended. The smooth or abrupt junction option can be used for the three junctions. Appropriate user-input energy loss coefficients may be needed to match a known pressure drop across the separator. We recommend that choking be turned off (c = 1) for all three junctions. The vapor/gas outlet and liquid fall back junctions should use the nonhomogeneous option (h = 0). The CCFL flag must be turned off (f = 0) for all three junctions. The stratification entrainment/pullthrough flag is not used for separator junctions and should be set to zero (v = 0). The rod bundle interphase friction flag must be turned off (b = 0) in the separator volume. The vertical stratification model flag is not used in the separator volume and should be set to zero (v = 0). The water packing scheme flag is not used in the separator volume and should be set to zero (p = 0).

A jetmixer (JETMIXER) component is a specialized branch component for modeling the merging of dissimilar fluid streams. It has three junctions numbered in the same manner as the separator. For the junctions, N = 1 represents the drive, N = 2 represents the suction, and N = 3 represents the discharge. While the JETMIXER component only allows for these three junctions for crossflow leakpaths or open media situations, JETMIXER components can be connected to other components using SNGLJUN, MTPLJUN, or BRANCH components. The to part of the drive and suction junctions must refer to the inlet end of the jetmixer (old format is CCC000000, and expanded format is CCC010001), and the from part of the discharge junction must refer to the outlet end of the jetmixer (old format is CCC010000, and expanded format is CCC010002). To model a jet pump properly, the junction flow areas of the drive and suction should equal the volume flow area. The CCFL flag must be turned off (f = 0) for all three junctions. The stratification entrainment/pullthrough flag is not used for jetmixer junctions and should be set to zero (v = 0). The rod bundle interphase friction flag must be turned off (b = 0) in the jetmixer volume. The vertical stratification model flag is not used in the jetmixer volume and should be set to zero (v = 0). The water packing scheme flag is not used in the jetmixer volume and should be set to zero (p = 0).

A turbine (TURBINE) component is a specialized branch component having one or two junctions. Additional input is provided to describe the turbine characteristics. A simple turbine might use only one turbine component. A multistage turbine with extraction points or moisture separator junctions might require several turbine components. The number of junctions, nj, must be equal to 1 or 2. For the junctions, N = 1 is the turbine junction that models the stages, and N = 2 is the extraction (bleed) or moisture separator junction (optional). The primary vapor/gas inlet junction (N = 1) is a normal junction, and the steam extraction or moisture separator line (N = 2) should be modeled as a crossflow junction. The steam extraction or moisture separator junction (N = 2) must be attached to the ‘side’ (i.e. on faces 3, 4, 5, or 6 using the expanded format for junction connection codes) of the turbine volume. The turbine junction (N = 1) must be the only entrance junction, and there must be only one exit junction (part of another component). The to part of the vapor/gas inlet junction (N = 1) must refer to the inlet end of the turbine volume (old format is CCC000000, and expanded format is CCC010001). The stratification entrainment/pullthrough flag must be turned off (v = 0). If several turbine components are in series, the choking flag should be left on (c = 0 or c = 2) for the first component but turned off for the other components (c = 1). The smooth junction option (a = 0) should be used at both inlet and outlet junctions. The inlet and outlet junctions must be input as homogeneous junctions (h = 1 or 2). The CCFL flag must be turned off (f = 0) for both junctions. The wall friction must be turned on (f = 0) in the turbine volume in the main flow direction and in the crossflow direction if a steam extraction or moisture separator junction is

specified. The rod bundle interphase friction flag must be turned off (b = 0) in the turbine volume. The vertical stratification model flag is not used in the turbine volume and should be set to zero (v = 0). The water packing scheme flag is not used in the turbine volume and should be set to zero (p = 0). The component volumes immediately upstream and downstream of a turbine component must be singly connected in the main flow direction. That is, if the turbine inlet junction is attached to an 'x' face of the upstream component volume, then that component volume can have only one connection on each of the two 'x' faces of that volume. This restriction is also applicable to the component volume immediately downstream of a turbine component. That is, if the junction attached to the output of a turbine is connected to the 'x' face of the component volume immediately downstream of the turbine, then there can only be one junction connected to each of the two 'x' faces of that component volume. The restriction of single connections is also applicable if the turbine is connected to 'y' or 'z' faces of the attached component volumes.

A feedwater heater (FWHTR) component is a specialized branch component having two or three junctions. It must be defined as horizontally oriented (Word 5 of Card CCC0101 must be 0). The number of junctions, nj, defined below, must be two or three, and no junctions in other components may be connected to this component. The variable N, defined below, must have values of 1, 2, or, 3. For the junctions, N = 1 is the vapor inlet, N = 2 is the condensate drain, and N = 3 is the condensate inlet (optional). The to part for the vapor inlet junction must refer to the z-coordinate outlet face of the feedwater heater for the expanded format (CCC010006). The from part for the condensate drain junction must refer to the z-coordinate inlet face of the feedwater heater for the expanded format (CCC010005). A condensate inlet junction can be connected to the x-coordinate inlet or outlet face of the feedwater heater for the old format (CCC000000, CCC010000) or can be connected to any of the 6 volume faces of the feedwater heater for the expanded format (CCC010001 through CCC010006). The smooth or abrupt junction option can be used for the junctions. Appropriate user-input energy loss coefficients may be needed to match a known pressure drop across the feedwater heater. We recommend that choking be turned off (c = 1) for all junctions. All junctions should use the nonhomogeneous option (h = 0). The CCFL flag must be turned off (f = 0) for all junctions. The stratification entrainment/pullthrough flag is required for all junctions. The flag v should be set to 1 for the vapor inlet junction, indicating an upward oriented junction from a horizontal volume, and set to 2 for the condensate drain junction and the optional condensate inlet junction, indicating they are downward oriented junctions from a horizontal volume. The rod bundle interface friction flag must be turned off (b = 0) in the feedwater heater volume. The vertical stratification model flag is not used in the feedwater heater volume and should be set to zero (v = 0). The water packing scheme flag is not used in the feedwater heater volume and should be set to zero (p = 0).

An ECC mixer (ECCMIX) component is a specialized branch component that requires three junctions with a certain numbering order. The physical extent of the ECC mixer is a length of the cold leg, or any other horizontal pipe, centered around the position of the ECC injection location. The length of this pipe segment should be equal to three times the inside diameter of the pipe (if the physical arrangement of the system permits). Junction number one (N = 1, the lowest numbered junction) must be the ECC connection. This is, in some respects, similar to the drive junction of a jetmixer component. Junction number two (N = 2, the junction with higher number than the first one) should be the one that is the flow inlet to this component in normal operation. The geometrical angle between the axis of junctions one and

two is one of the necessary inputs, as will be specified later. The third, or discharge, junction (N = 3) is the normal outlet of flow through this pipe segment. The to part of junctions one and two must refer to the inlet end of the ECC mixer (old format is CCC000000, and expanded format is CCC010001), and the from part of the discharge junction must refer to the outlet end of the ECC mixer (old format is CCC010000, and expanded format is CCC010002). Two or more ECC mixer components may be considered in modeling some piping. These may be connected in tandem and require at least one normal volume between them.

7.7.2 Card CCC0001, Branch, Separator, Jetmixer, Turbine, Feedwater Heater, or ECC Mixer Information

This card is required for branch, separator, jetmixer, turbine, feedwater heater, or ECC mixer components.

W1(I) Number of junctions, nj. The variable nj is the number of junctions described in the input data for this component and must be equal to or greater than zero and less than ten. This number must be 3 for SEPARATR, JETMIXER, and ECCMIX components; must be 1 or 2 for TURBINE components; and must be 2 or 3 for FWHTR components. For BRANCH components, not all junctions connecting to the branch need be described with this component input, and nj is not necessarily the total number of junctions connecting to the branch. Junctions described in single-junctions, time-dependent junctions, pumps, separators, jetmixers, feedwater heaters, ECC mixers, and other branches can be connected to this branch.

W2(I) Initial condition control. This word is optional and, if missing, the junction initial velocities in the first and second words on Card CCCN201 are assumed to be velocities. If zero, velocities are assumed; if one, mass flow rates are assumed.

7.7.3 Card CCC0002, Separator Component Options

If this card is missing, the simple separator is used.

This card is optional for a separator component. It is not allowed for branch, jetmixer, turbine, feedwater heater, or ECC mixer components. The first word specifies the separator option, while the second word specifies the number of actual separator components represented by this RELAP5-3D© SEPARATR component. The second word is needed if the user uses the General Electric separator options.

W1(I) Separator option, ISEPST. A value of 0 specifies the simple separator contained in previous versions of RELAP5-3D© (default), a value of 1 specifies the General Electric dryer model, a value of 2 specifies a General Electric two-stage separator, and a value of 3 specifies a General Electric three-stage separator.

W2(I) Number of separator components represented by this RELAP5-3D© component, NSEP. The number is needed only if Word 1 has a value of 2 or 3. The default is 1.

7.7.4 Card CCC0003, Feedwater Heater Data

This card is optional for the feedwater heater component. It is not allowed for branch, separator, jetmixer, turbine, or ECC mixer components. Word 1 is the number of a table that specifies the relationship between the non-dimensional water level and the void on the shell side of the feedwater heater. The non-dimensional water level is equal to the water level divided by the shell diameter. The table must be a REAC-T type table, which has no units conversion. If this card is missing, the code uses the liquid volume fraction (1 - void) as the default value for the non-dimensional water level.

W1(I) Table number specifying non-dimensional water level for the table function value (Cards 202TTT01-202TTT99, Word 2) versus void for the table argument value (Cards 202TTT01-202TTT99, Word 1) in the shell side of the feedwater heater.

7.7.5 Cards CCC0101 through CCC0109, Branch, Separator, Jetmixer, Turbine, Feedwater Heater, or ECC Mixer X-Coordinate Volume Data

This card (or cards) is required for branch, separator, jetmixer, turbine, feedwater heater, and ECC mixer components. The nine words can be entered on one or more cards, and the card numbers need not be consecutive.

W1(R) Volume flow area in the x-direction (m^2, ft^2).

W2(R) Length of volume in the x-direction (m, ft).

W3(R) Volume of volume (m^3, ft^3). The code requires that the volume equals the volume flow area times the length (W3 = W1•W2). This is required for all three directions. At least two of the three quantities, W1, W2, and W3, must be nonzero. If one of the quantities is zero, it will be computed from the other two. If none of the words are zero, the volume must equal the x-direction area times the x-direction length within a relative error of 0.000001. The same relative error check is done for the y- and z-directions.

W4(R) Azimuthal (horizontal) angle (degrees). The absolute value of this angle must be $\leq$ 360 degrees and is defined as a positional quantity. This angle is in the horizontal x-y plane. The angle 0 degrees is on the x axis, and the angle 90 degrees in on the y axis. Positive angles are rotated from the x axis toward the y axis. This quantity is not used in the calculation but is specified for automated drawing of nodalization diagrams.

W5(R) Inclination (vertical) angle (degrees). The absolute value of this angle must be $\leq$ 90 degrees. The angle 0 degrees is horizontal; positive angles have an upward inclination, i.e., the inlet is at the lowest elevation. This angle is used in the flow regime

determination, in the interphase drag calculation, and for automated drawing of nodalization diagrams. When the absolute value of the inclination (vertical) angle is less than or equal to 30 degrees, the horizontal flow regime map is used. When the absolute value of the inclination (vertical) angle is greater than or equal to 60 degrees, the vertical flow regime map is used. Between 30 and 60 degrees, interpolation is used. For an ECCMIX component, this angle is not used to decide if the horizontal or vertical flow regime map is used. Rather, the ECC mixer flow regime map is used. For an ECCMIX component, the absolute value of this inclination angle must be ≤ 15 degrees. Any other value will be considered an input error.

W6(R) Elevation change (m, ft). A positive value is an increase in elevation. The absolute value of this quantity must be less than or equal to the volume length. If the inclination (vertical) angle is zero, this quantity must be zero. If the inclination (vertical) angle is nonzero, this quantity must also be nonzero and have the same sign. The elevation change is used in the gravity head and in checking loop closure. See Section 2.4.1 of Volume II of the manual for further discussion.A calculated elevation angle is determined by the arcsin of the ratio of the elevation change (this word) and the volume length (Word 2). This calculated elevation angle is used in the additional stratified force term.

W7(R) Wall roughness in the x-direction (m, ft). The x-direction wall roughness is limited to be greater than or equal to 1.0×10^{-9} times the x-direction hydraulic diameter. If zero, the x-direction wall roughness is computed from 1.0×10^{-9} times the x-direction hydraulic diameter.

W8(R) Hydraulic diameter in the x-direction (m, ft). This should be computed from $4.0 \bullet \left(\frac{\text{x-direction volume flow area}}{\text{x-direction wetted perimeter}}\right)$. If zero, the x-direction hydraulic diameter is computed from $2.0 \bullet \left(\frac{\text{x-direction volume flow area}}{\pi}\right)^{0.5}$. A check is made that the x-direction wall roughness is less than half the x-direction hydraulic diameter. See Word 1 for the x-direction volume flow area.

W9(I) Volume control flags. This word has the packed format <u>tlpvbfe</u>. It is not necessary to input leading zeros. Volume flags consist of scalar oriented and coordinate direction oriented flags. Only one value for a scalar oriented flag is entered per volume but up to three coordinate oriented flags can be entered for a volume, one for each coordinate direction. At present, the f flag is the only coordinate direction oriented flag. This word enters the scalar oriented flags and the x-coordinate flag.

The digit <u>t</u> specifies whether the thermal stratification model is to be used; <u>t</u> = 0 specifies that the thermal stratification model is not to be used for the volume, and <u>t</u> = 1 specifies that the thermal stratification model is to be used for the volume. The thermal stratification

model can only be applied to vertically oriented components. This model is not used for SEPARATR, JETMIXER, TURBINE, FWHTR, or ECCMIX components, and the flag if entered as 1 is considered an input error.

The digit l specifies whether the mixture level tracking model is to be used; l = 0 specifies that the mixture level tracking model not be used for the volume, and l = 1 specifies that the mixture level tracking model be used for the volume. The mixture level tracking model can only be applied to vertically oriented components. This model is not used for SEPARATR, JETMIXER, TURBINE, FWHTR, or ECCMIX components, and the flag if entered as 1 is considered an input error.

The digit p specifies whether the water packing scheme is to be used; p = 0 specifies that the water packing scheme is to be used for the volume, and p = 1 specifies that the water packing scheme is not to be used for the volume. The water packing scheme is recommended when modeling a pressurizer. The water packing scheme is only applied to vertically oriented volumes. This digit is used for the BRANCH and ECCMIX components. For the SEPARATR, JETMIXER, FWHTR, and TURBINE components, the water packer scheme is not allowed, the digit is not used and may be input as 0 or 1. The major edit will show p = 1.

The digit v specifies whether the vertical stratification model is to be used; v = 0 specifies that the vertical stratification model is to be used for the volume, and v = 1 specifies that the vertical stratification model is not to be used for the volume. The vertical stratification model is recommended when modeling a pressurizer. The vertical stratification model is only applied to vertically oriented volumes. This digit is used for the BRANCH component. For the SEPARATR, JETMIXER, TURBINE, FWHTR, and ECCMIX components, the vertical stratification model is not allowed, the digit is not used and may be input as 0 or 1. The major edit will show v = 1.

The digit b specifies the interphase friction that is used; b = 0 specifies that the pipe interphase friction model will be applied, b = 1 specifies that the rod bundle interphase friction model will be applied, and b = 2 specifies that the ORNL ANS narrow channel model will be applied (Card CCC0111 required). The b = 1 option and the b = 2 option are only applied to vertically oriented volumes. This digit is only used for the BRANCH component. For the SEPARATR, JETMIXER, TURBINE, FWHTR, and ECCMIX components, the rod bundle interphase friction and the ORNL ANS narrow channel model are not allowed; the digit is not used and must be input as 0.

The digit f specifies whether wall friction is to be computed; f = 0 specifies that wall friction effects are to be computed along the x-coordinate direction of the volume, and f = 1 specifies that wall friction effects are not to be computed along the x-coordinate for the volume. For a SEPARATR component, either 0 or 1 may be entered; the code will set

f = 1 and no wall friction will be calculated. The digit f must be entered as 1 for a TURBINE component.

The digit e specifies if nonequilibrium or equilibrium is to be used; e = 0 specifies that a nonequilibrium (unequal temperature) calculation is to be used, and e = 1 specifies that an equilibrium (equal temperature) calculation is to be used. Equilibrium volumes should not be connected to nonequilibrium volumes. The equilibrium option is provided only for comparison to other codes.

7.7.6 Cards CCC0181 through CCC0189, Branch, Separator, Jetmixer, Turbine, Feedwater Heater, or ECC Mixer Y-Coordinate Volume Data

These cards are optional for BRANCH, SEPARATR, JETMIXER, TURBINE, and ECCMIX components. These cards are used when the user specifies the y-direction connection with the crossflow model. The volume of the volume is the same for the x-, y-, and z-directions. If these cards are entered, either W1 or W2 must be nonzero.

W1(R) Area of the volume in the y-direction (m^2, ft^2). If these cards are missing or if this word is zero, this y-direction volume flow area is computed from $\frac{\text{volume of volume}}{\text{y-direction length}}$.

W2(R) Length of the crossflow volume in the y-direction (m, ft). If these cards are missing, this y-direction length is computed from $2.0 \bullet \left(\frac{\text{x – direction volume flow area}}{\pi}\right)^{0.5}$. If this word is zero, this y-direction length is computed from $\frac{\text{volume of volume}}{\text{y-direction volume flow area}}$.

W3(R) Wall roughness in the y-direction (m, ft). The y-direction wall roughness is limited to be greater than or equal to 1.0×10^{-9} times the y-direction hydraulic diameter. If zero, the y-direction wall roughness is computed from 1.0×10^{-9} times the y-direction hydraulic diameter.

W4(R) Hydraulic diameter in the y-direction (m, ft). If these cards are missing or if this word is zero, this y-direction hydraulic diameter is computed from $4.0 \bullet \frac{\text{y – direction volume flow area}}{(\pi \bullet \text{x – direction volume flow area})^{0.5}}$. See Section 2.4 of this volume of the manual. A check is made to ensure the y-direction wall roughness is less than half the y-direction hydraulic diameter.

W5(I) Volume control flags. This word has the general packed format tlpvbfe, but this word is limited to 00000f0 since it only enters the coordinate oriented flags for the y-direction.

The digit f specifies whether wall friction is to be computed; f = 0 specifies that wall friction effects are to be computed along the y-coordinate direction of the volume, and f = 1 specifies that wall friction effects are not to be computed along the y-coordinate direction of the volume. For a SEPARATR component, either 0 or 1 may be entered; the code will set f = 1 and no wall friction will be calculated. The digit f must be entered as 1 for a turbine component.

W6(R) This word is not used. Enter 0.

W7(R) This word is not used. Enter 0.

W8(R) This word is the position change in the fixed z (vertical) direction as the flow passes from the y inlet face to the y outlet face (m, ft). This quantity affects problems if connections are made to the y faces.

7.7.7 Cards CCC0191 through CCC0199, Branch, Separator, Jetmixer, Turbine, Feedwater Heater, or ECC Mixer Z-Coordinate Volume Data

These cards are optional for BRANCH, SEPARATR, JETMIXER, TURBINE, FWHTR, and ECCMIX components. These cards are used when the user specifies the z-direction connection with the crossflow model. The volume of the volume is the same for the x-, y-, and z-directions. If these cards are entered, either W1 or W2 must be nonzero.

W1(R) Area of the volume in the z-direction (m^2, ft^2). If these cards are missing or if this word is zero, this z-direction volume flow area is computed from $\frac{\text{volume of volume}}{\text{z-direction length}}$.

W2(R) Length of the crossflow volume in the z-direction (m, ft). If these cards are missing, this z-direction length is computed from $2.0 \bullet \left(\frac{\text{x – direction volume flow area}}{\pi}\right)^{0.5}$. If this word is zero, this z-direction length is computed from $\frac{\text{volume of volume}}{\text{z-direction volume flow area}}$.

W3(R) Wall roughness in the z-direction (m, ft). The z-direction wall roughness is limited to be greater than or equal to 1.0×10^{-9} times the z-direction hydraulic diameter. If zero, the z-direction wall roughness is computed from 1.0×10^{-9} times the z-direction hydraulic diameter.

W4(R) Hydraulic diameter in the z-direction (m, ft). If these cards are missing or if this word is zero, this z-direction hydraulic diameter is computed from $4.0 \bullet \frac{\text{z – direction volume flow area}}{(\pi \bullet \text{x – direction volume flow area})^{0.5}}$. See Section 2.4 of this volume of the

manual. A check is made to ensure the z-direction wall roughness is less than half the z-direction hydraulic diameter.

W5(I) Volume control flags. This word has the general packed format tlpvbfe, but this word is limited to 00000f0 since it only enters the coordinate oriented flags for the z-direction.

The digit f specifies whether wall friction is to be computed; f = 0 specifies that wall friction effects are to be computed along the z-coordinate direction of the volume, and f = 1 specifies that wall friction effects are not to be computed along the z-coordinate direction of the volume. For a SEPARATR component, either 0 or 1 may be entered; the code will set f = 1 and no wall friction will be calculated. The digit f must be entered as 1 for a turbine component.

W6(R) This word is not used. Enter 0.

W7(R) This word is not used. Enter 0.

W8(R) This word is the position change in the fixed z (vertical) direction as flow passes from the z inlet face to the z outlet face (m, ft). This quantity affects problems if connections are made to the z faces.

7.7.8 Card CCC0111, Branch, Separator, Jetmixer, Turbine, Feedwater Heater, or ECC Mixer ORNL ANS Interphase Model Pitch and Span Values

This card is required if the interphase friction flag b in Word 9 of Card CCC0101 through CCC0109 is set to 2 (ORNL ANS narrow channel model), which is allowed for a BRANCH component. It is not allowed for SEPARATR, JETMIXER, TURBINE, FWHTR, and ECCMIX components.

W1(R) Pitch (gap, channel width perpendicular to flow), short dimension (m, ft).

W2(R) Span (channel length perpendicular to flow), long dimension (m, ft).

7.7.9 Card CCC0131, Branch, Separator, Jetmixer, Feedwater Heater, or ECC Mixer Additional Wall Friction

This card is optional for the BRANCH, SEPARATR, JETMIXER, FWHTR, and ECCMIX components, and it is not allowed for a TURBINE component. If this card is not entered, the default values are 1.0 for the laminar wall friction shape factor and 0.0 for the wall friction factor heated wall effect viscosity ratio exponent. Two, four, or six quantities may be entered on the card, and the data not entered are set to default values. A description of this input is presented in Section 3 of Volume I.

W1(R) Wall friction shape factor for coordinate direction 1.

W2(R) Wall friction factor heated wall effect viscosity ratio exponent for coordinate direction 1.

W3(R) Wall friction shape factor for coordinate direction 2.

W4(R) Wall friction factor heated wall effect viscosity ratio exponent for coordinate direction 2.

W5(R) Wall friction shape factor for coordinate direction 3.

W6(R) Wall friction factor heated wall effect viscosity ratio exponent for coordinate direction 3.

7.7.10 Card CCC0141, Branch, Separator, Jetmixer, Feedwater Heater, or ECC Mixer Alternate Turbulent Wall Friction

This card is optional for the BRANCH, SEPARATR, JETMIXER, FWHTR, and ECCMIX components, and it is not allowed for a TURBINE component. This card allows the specification of a user-defined turbulent wall friction factor for each coordinate direction (see Volume I, Section 3.3.8.6). The user-defined turbulent wall friction factor has the form $f = A + B(Re)^{-C}$ where A, B, and C are entered for each coordinate of each volume and Re is the volume Reynolds number for the appropriate coordinate and appropriate phase. If this cards is not entered, the standard turbulent wall friction factor is used for all coordinates. If the card is entered, the standard turbulent wall friction factor can be selected for a particular coordinate direction by entering zeros for the three quantities. Three, six, or nine quantities may be entered on the card, and the data not entered are set to zeros.

W1(R) A for coordinate direction 1.

W2(R) B for coordinate direction 1.

W3(R) C for coordinate direction 1.

W4(R) A for coordinate direction 2.

W5(R) B for coordinate direction 2.

W6(R) C for coordinate direction 2.

W7(R) A for coordinate direction 3.

W8(R) B for coordinate direction 3.

W9(R) C for coordinate direction 3.

7.7.11 Card CCC0200, Branch, Separator, Jetmixer, Turbine, Feedwater Heater, or ECC Mixer Volume Initial Conditions

This card is required for the BRANCH, SEPARATR, JETMIXER, TURBINE, FWHTR, and ECCMIX components.

W1(I) Control word. This word has the packed format εbt. It is not necessary to input leading zeros.

The digit ε specifies the fluid, where ε = 0 is the default fluid. The value for ε > 0 corresponds to the position number of the fluid type indicated on the 120 - 129 cards (i.e., ε = 1 specifies H_2O, ε = 2 specifies D_2O, etc.). The default fluid is that set for the hydrodynamic system by Cards 120 through 129 or this control word in another volume in this hydrodynamic system. The fluid type set on Cards 120 through 129 or these control words must be consistent (i.e., not specify different fluids). If Cards 120 through 129 are not entered and all control words use the default ε = 0, then H_2O is assumed to be the fluid.

The digit b specifies whether boron is present or not. The digit b = 0 specifies that the volume liquid does not contain boron, and b = 1 specifies that a boron concentration in mass of boron per mass of liquid (which may be zero) is being entered after the other required thermodynamic information.

The digit t specifies how the following words are to be used to determine the initial thermodynamic state. Entering t equal to 0 through 3 specifies one component (vapor/liquid). Entering t equal to 4, 5, 6, or 8 allows the specification of two components (vapor/liquid and noncondensable gas).

With options t equal to 4, 5, 6, or 8, the names of the components of the noncondensable gas must be entered on Card 110, and the mass fractions of the components of the noncondensable gas are entered on Card 115 (if more than 1 noncondensable component is specified on Card 110). Card CCC0701 may also be used for the mass fractions of the components on the noncondensable gas.

If t = 0, the next four words are interpreted as pressure (Pa, lb_f/in^2), liquid specific internal energy (J/kg, Btu/lb_m), vapor/gas specific internal energy (J/kg, Btu/lb_m), and vapor/gas void fraction. These quantities will be interpreted as nonequilibrium or equilibrium conditions depending on the specific internal energies used to define the thermodynamic state. Enter only the minimum number of words required. If entered, boron concentration (mass of boron per mass of liquid) follows the last required word for thermodynamic conditions.

If t = 1, the next two words are interpreted as temperature (K, ^oF) and static quality in equilibrium condition. Enter only the minimum number of words required. If entered, boron concentration (mass of boron per mass of liquid) follows the last required word for thermodynamic conditions.

If t = 2, the next two words are interpreted as pressure (Pa, lb_f/in^2) and static quality in equilibrium condition. Enter only the minimum number of words required. If entered, boron concentration (mass of boron per mass of liquid) follows the last required word for thermodynamic conditions.

If t = 3, the next two words are interpreted as pressure (Pa, lb_f/in^2) and temperature (K, ^oF) in nonequilibrium or equilibrium conditions depending on the pressure and temperature used to define the thermodynamic state. Enter only the minimum number of words required. If entered, boron concentration (mass of boron per mass of liquid) follows the last required word for thermodynamic conditions.

The following options are used for input of noncondensable states. In all cases, the criteria used for determining the range of values for static quality are;

1. 1.0E-9 $\leq$ static quality $\leq$ 0.99999999, two phase conditions

2. static quality < 1.0E-9 or static quality > 0.99999999, single-phase conditions.

The static quality is given by $M_g/(M_g + M_f)$, where $M_g = M_s + M_n$. Section 3.2 of Volume I of the manual discusses this further.

Noncondensable options are as follows:

If t = 4, the next three words are interpreted as pressure (Pa, $lb_f/in.^2$), temperature (K, ^oF), and static quality in equilibrium condition. Using this input option with static quality greater than 0.0 and less than or equal to 1.0, saturated noncondensables (100% relative humidity) will result. The temperature is restricted to be less than the saturation temperature at the input pressure and less than the critical temperature; otherwise, an input error will occur. Setting static quality to 0.0 is used as a flag that will initialize the volume to all noncondensable (dry noncondensable, 0% relative humidity) with no temperature restrictions. Static quality is reset to 1.0 using this dry noncondensable option. Enter only the minimum number of words required. If entered, boron concentration (mass of boron per mass of liquid) follows the last required word for thermodynamic conditions.

If t = 5, the next three words are interpreted as temperature (K, ^oF), static quality, and noncondensable quality in equilibrium condition. Both the static and noncondensable qualities are restricted to be between 1.0E-9 and 0.99999999. Enter only the minimum number of words required. If entered, boron concentration (mass of boron per mass of liquid) follows the last required word for thermodynamic conditions. Little experience has been obtained using this option, and it has not been checked out.

If t = 6, the next five words are interpreted as pressure (Pa, $lb_f/in.^2$), liquid specific internal energy (J/kg, Btu/lb_m), vapor/gas specific internal energy (J/kg, Btu/lb_m), vapor/gas void fraction, and noncondensable quality. These quantities will be interpreted as nonequilibrium or equilibrium conditions depending on the specific internal energies used to define the thermodynamic state. This option can be used to set the relative humidity to less than or equal to 100%. The combinations of vapor/gas void fraction and noncondensable quality must be thermodynamically consistent. If the noncondensable quality is set to 0.0, noncondensables are not present and the input processing branches to that type of processing (t = 0). For this situation, Card 110 must be entered, and Card 115 must be entered if more than 1 noncondensable component is specified on Card 110. If noncondensables are present (noncondensable quality greater than 0.0), then the vapor/gas void fraction must also be greater than 0.0. If the noncondensable quality is set to 1.0 (pure noncondensable, 0% relative humidity), then the vapor/gas void fraction must also be 1.0. When both the vapor/gas void fraction and the noncondensable quality are set to 1.0, the volume temperature is calculated from the noncondensable energy equation using the input vapor/gas specific internal energy. Enter only the minimum number of words required. If entered, boron concentration (mass of boron per mass of liquid) follows the last required word for thermodynamic conditions.

If t = 8, the next five words are interpreted as pressure (Pa, lb_f/in^2), liquid temperature (K, ^oF), vapor/gas temperature (K, ^oF), vapor/gas void fraction, and noncondensable quality. These quantities will be interpreted as nonequilibrium or equilibrium conditions depending on the temperatures used to define the thermodynamic state. This option can be used to set the relative humidity to less than or equal to 100%. The combinations of vapor/gas void fraction and noncondensable quality must be thermodynamically consistent. If the noncondensable quality is set to 0.0, noncondensables are not present and the input processing branches to that type of processing. For this situation, Card 110 must be entered, and Card 115 must be entered if more than 1 noncondensable component is specified on Card 110. If noncondensables are present (noncondensable quality greater than 0.0), then the vapor/gas void fraction must also be greater than 0.0. If the noncondensable quality is set to 1.0 (pure noncondensable, 0% relative humidity), then the vapor/gas void fraction must also be 1.0. When both the vapor/gas void fraction and the noncondensable quality are set to 1.0, the volume specific internal energy is calculated from the noncondensable energy equation using the input vapor/gas temperature. Enter only the minimum number of words required. If entered, boron concentration (mass of boron per mass of liquid) follows the last required word for thermodynamic conditions.

W2-W7(R) Quantities as described under Word 1. Depending on the control word, two through five thermodynamic quantities may be required. Enter only the minimum number required. If entered, boron concentration (mass of boron per mass of liquid) follows the last required word for thermodynamic conditions.

7.7.12 Cards CCCN101 through CCCN109, Branch, Separator, Jetmixer, Turbine, Feedwater Heater, or ECC Mixer Junction Geometry

These cards are required if nj (Card CCC0001, Word 1) is greater than zero. Cards with N equal to 1 through 9 are entered, one for each junction. The variable N equal to 1, 2, and 3 must be used for SEPARATR, JETMIXER, and ECCMIX components. The variable N equal to 1 must be used for TURBINE components and may be equal to 1 or 2. The variable N equal to 1 and 2 must be used for FWHTR components and may be equal to 1, 2, or 3. For a BRANCH component, N need not be consecutive, but nj cards must be entered. The card format for Words 1 through 6 is listed below and is identical to Words 1 through 6 on Card CCC0101 of the Single-Junction Geometry Card, except that N instead of 0 is used in the fourth digit. There are special requirements for Words 1 and 2 that are indicated in the introductory paragraphs to Section 7.7. Word 7 is not used for JETMIXER and TURBINE components. Word 7 is defined for SEPARATR and ECCMIX components. Words 7, 8, and 9 are defined for BRANCH and FWHTR components.

W1(I) <u>From</u> connection code to a component. This refers to the component <u>from</u> which the junction coordinate direction originates. An old or an expanded format can be used to connect volumes. In the old format (only allowed for connection <u>from</u> 1-D components), use CCC000000 if the connection is <u>from</u> the inlet side of the component and use CCC010000 if the connection is <u>from</u> the outlet side of the component. In the expanded format, the connection code for 1-D components is CCCXX000F [where CCC is the component number, XX is the volume number (greater than 00 and less than 100) for pipes/annuli/pressurizers, XX is 01 for all other 1-D components, and F indicates the face number], and the connection code for 3-D components is CCCXYYZZF [where CCC is the component number, X is the first coordinate direction (x or r) position number, YY is the second coordinate direction (y or θ) position number, ZZ is the third coordinate direction (z) position number, and F indicates the face number]. A nonzero F specifies the expanded format. The number F equal to 1 and 2 specifies the inlet and outlet faces for the first coordinate direction (x or r), which is a 1-D volume's coordinate direction (x) (see Section 2.1 of Volume II of this manual). The number F equal to 3 through 6 specifies crossflow (y or z) for 1-D volumes. The number F equal to 3 and 4 would specify inlet and outlet faces for the second coordinate direction (y or θ); F equal to 5 and 6 would do the same for the third coordinate direction (z). For connecting <u>from</u> a time-dependent volume using the old format, both CCC000000 and CCC010000 are allowed. For connecting <u>from</u> a time-dependent volume using the expanded format, only the number F equal to 1 or 2 is allowed. Section 4.4 in this Appendix discusses this further.

W2(I) <u>To</u> connection code to a component. This refers to the component at which the junction coordinate direction ends. See the description for W1 above; use <u>to</u> instead of <u>from</u>.

W3(R) Junction flow area (m^2, ft^2). If zero, the junction flow area is set to the minimum volume flow area of the adjoining volumes. For abrupt area changes, the junction flow area must

be equal to or smaller than the minimum of the adjoining volume flow areas. For smooth area changes, there are no restrictions.

W4(R) Reynolds number independent forward flow energy loss coefficient, A_F. This quantity will be used in each of the phasic momentum equations when the junction velocity of that phase is positive or zero. A variable loss coefficient may be specified (see Section 7.7.14 of this Appendix). The interpretation and use of the coefficient depends on whether the smooth or abrupt area change option is specified or grid spacers are modeled (see Section 2.4.1 of Volume II of this manual). This quantity must be greater than or equal to zero. See Section 5.6 of Volume V for more information. For a TURBINE component, if the variable loss coefficient is not specified, the forward loss coefficient A_F is multiplied by a multiplier (See Card CCC400).

W5(R) Reynolds number independent reverse flow energy loss coefficient, A_R. This quantity will be used in each of the phasic momentum equations when the junction velocity of that phase is negative. A variable loss coefficient may be specified (see Section 7.7.14 of this Appendix). The interpretation and use of the coefficient depends on whether the smooth or abrupt area change option is specified or grid spacers are modeled (see Section 2.4.1 of Volume II of this manual). This quantity must be greater than or equal to zero. See Section 5.6 of Volume V for more information. For a TURBINE component, if the variable loss coefficient is not specified, the forward loss coefficient A_R is multiplied by a multiplier (See Card CCC400).

W6(I) Junction control flags. This word has the packed format jefvcahs.

The digit j is not used and should be input as zero (j = 0). The jet junction model is not used.

The digit e specifies the modified PV term in the energy equations; e = 0 specifies that the modified PV term will not be applied, and e = 1 specifies that the modified PV term will be applied. This digit is only for the BRANCH component. For the SEPARATR, JETMIXER, TURBINE, FWHTR, and ECCMIX components, this digit is not used and should be set to 0. The major edit output will show e = 0.

The digit f specifies CCFL options; f = 0 specifies that the CCFL model will not be applied, and f = 1 specifies that the CCFL model will be applied. This digit is only used for the BRANCH component. For the SEPARATR, JETMIXER, TURBINE, FWHTR, and ECCMIX components, the CCFL model is not allowed, this digit is not used and should be set to 0. The major edit output will show f = 0.

The digit v specifies stratification entrainment/pullthrough options, where this model is for junctions connected to a horizontal or vertical volume; v = 0 specifies the model is not

applied, v = 1 specifies an upward oriented junction from a horizontal volume (offtake volume must be vertical), v = 2 specifies a downward oriented junction from a horizontal volume (offtake volume must be vertical), and v = 3 specifies a centrally (side) located junction from a horizontal or vertical volume. For v = 1 or 2, the horizontal volume flow area must be greater than or equal to the offtake volume flow area. This digit is only used for the BRANCH and FWHTR components. For FWHTR components, this digit must be 1 for the vapor inlet junction (N = 1) and 2 for the condensate drain junction (N = 2) and condensate inlet junction (N = 3). For the SEPARATR, JETMIXER, TURBINE, and ECCMIX components, the stratification entrainment/pullthrough model is not allowed, this digit is not used and should be set to 0.

The digit c specifies choking options; c = 0 specifies that the standard choking model will be applied, c = 1 specifies that neither choking model will be applied, and c = 2 specifies that the modified Henry-Fauske choking model will be applied.

The digit a specifies area change options (see Volume II, Section 2.4.1 and Volume V, Section 4.6.3); a = 0 specifies either a smooth area change or no area change, a = 1 specifies the full abrupt area change model (code-calculated K_{loss}, area apportioning at a branch, restricted junction area, and extra interphase drag), and a = 2 specifies the partial abrupt area change model (no code-calculated K_{loss}, but includes area apportioning at a branch, restricted junction area, and extra interphase drag). It is recommended that the abrupt area change model (a = 1 or a = 2) be used at branches.

The digit h specifies nonhomogeneous or homogeneous; h = 0 specifies the nonhomogeneous (two-velocity momentum equations) option, and h = 1 or 2 specifies the homogeneous (single-velocity momentum equation) option. For the homogeneous option (h = 1 or 2), the major edit printout will show h = 1.

The digit s specifies momentum flux options. This digit is used for the BRANCH, SEPARATR, and FWHTR components; s = 0 specifies momentum flux in both the to and the from volume, s = 1 specifies momentum flux in the from volume but not in the to volume, s = 2 specifies momentum flux in the to volume but not in the from volume, and s = 3 specifies no momentum flux in either the to volume or the from volume. For the JETMIXER, TURBINE, and ECCMIX components, this digit is not used and should be input as 0.

For BRANCH and FWHTR, the meaning of the following three words (W7, W8, and W9) are different depending on the choking model chosen with the c junction control flag.

If c = 0 or c = 1, then the following definitions are used:

W7(R) Volume fraction limit (for SEPARATR), angle (for ECCMIX), and subcooled discharge coefficient (for BRANCH and FWHTR). This word is optional only for a SEPARATR, an ECCMIX, a FWHTR, or a BRANCH. It is not used for a JETMIXER or a TURBINE.

For SEPARATR, this word is volume fraction limit. This is only used for the simple separator. For the vapor/gas outlet junction (N = 1), this quantity (VOVER) is the vapor/gas volume fraction above which flow out of the vapor/gas outlet junction has a vapor/gas volume fraction of VGMAX (input cards CCCN901-CCCN909 or default 1.0). If the word is missing, a default value of 0.5 is used. For the liquid fall back junction (N = 2), this quantity (VUNDER) is the liquid volume fraction above which flow out of the liquid fall back junction has a liquid volume fraction of VFMAX (input cards CCCN901-CCCN909 or default 1.0). If the word is missing, a default value of 0.15 is used. For the separator inlet junction (N = 3), this word is not used.

For ECCMIX, this word is angle and is the angle between the axis of the ECC injection line and the main pipe (or the angle between Junctions 1 and 2). This angle must be between 0 and 180 degrees. This word is only used for the ECC injection line junction (N=1). If this word is missing, a 90-degree connection for the ECC injection line is assumed. For the flow inlet (normal operation) junction (N=2), this word is not used, For the flow outlet (normal operation) junction (N=3), this word is not used.

For BRANCH and FWHTR, this word is subcooled discharge coefficient. This quantity is applied only to subcooled liquid choked flow calculations if $\underline{c} = 0$ and is not used if $\underline{c} = 1$. The quantity must be > 0.0 and $\leq$ 2.0. If W7, W8, and W9 are missing, then W7, W8, and W9 are set to 1.0.

W8(R) For BRANCH and FWHTR, this optional word is two-phase discharge coefficient. This word is not used for JETMIXER, TURBINE, ECCMIX, or SEPARATR. This quantity is applied only to two-phase choked flow calculations if $\underline{c} = 0$ and is not used if $\underline{c} = 1$. The quantity must be > 0.0 and $\leq$ 2.0. If W7 is entered and W8 and W9 are missing, then W8 and W9 are set to 1.0.

W9(R) For BRANCH and FWHTR, this optional word is superheated discharge coefficient. This word is not used for JETMIXER, TURBINE, ECCMIX, or SEPARATR. This quantity is applied only to superheated vapor/gas choked flow calculations if $\underline{c} = 0$ and is not used if $\underline{c} = 1$. The quantity must be > 0.0 and $\leq$ 2.0. If W7 and W8 are entered and W9 is missing, then W9 is set to 1.0.

If $\underline{c}$ = 2, then the following definitions are used:

W7(R) Volume fraction limit (for SEPARATR), angle (for ECCMIX), and discharge coefficient (for BRANCH and FWHTR). This word is optional only for a SEPARATR, an ECCMIX, a FWHTR, or a BRANCH. It is not used for a JETMIXER or a TURBINE.

For SEPARATR, this word is volume fraction limit. This is only used for the simple separator. For the vapor/gas outlet junction (N = 1), this quantity (VOVER) is the vapor/gas volume fraction above which flow out of the vapor/gas outlet junction has a vapor/gas volume fraction of VGMAX (input cards CCCN901-CCCN909 or default 1.0). If the word is missing, a default value of 0.5 is used. For the liquid fall back junction (N = 2), this quantity (VUNDER) is the liquid volume fraction above which flow out of the liquid fall back junction has a liquid volume fraction of VFMAX (input cards CCCN901-CCCN909 or default 1.0). If the word is missing, a default value of 0.15 is used. For the separator inlet junction (N = 3), this word is not used.

For ECCMIX, this word is angle and is the angle between the axis of the ECC injection line and the main pipe (or the angle between Junctions 1 and 2). This angle must be between 0 and 180 degrees. If missing, a 90-degree connection for the ECC pipe is assumed.

For BRANCH and FWHTR, this word is the discharge coefficient. The quantity must be > 0.0 and ≤ 2.0. If W7 and W8 are missing, then W7 is set to 1.0 and W8 is set to 0.14.

W8(R) For BRANCH and FWHTR, this word is the thermal nonequilibrium constant. This word is not used for JETMIXER, TURBINE, ECCMIX, and SEPARATR, If W8 is < 0.01, the equilibrium option is used and W8 is set to 0.0. If W8 is > 1000.0, the frozen option is used and W8 is reset to 1000.0. If W7 is entered and W8 is missing, then W8 is set to 0.14.

W9(R) For BRANCH and FWHTR, this word is not used (do not enter), This word is also not used for JETMIXER, TURBINE, ECCMIX, and SEPARATR.

7.7.13 Cards CCCN110, Branch, Separator, Jetmixer, Turbine, Feedwater Heater, or ECC Mixer Junction Diameter and CCFL Data

These cards are optional for the BRANCH, SEPARATR, JETMIXER, FWHTR, and ECCMIX components, and they are not allowed for the TURBINE component. The value of N should follow the same approach as used in Cards CCCN101 through CCCN109. The defaults indicated for each word are used if the card is not entered. If these cards are being used to specify only the junction hydraulic diameter for the interphase drag calculations (i.e., $\underline{f}$ = 0 in Word 6 of Cards CCCN101 through CCCN109), then the diameter should be entered in Word 1 and any allowable values should be entered in Words 2 through 4 (will not be used). If these cards are being used for the CCFL model (i.e., $\underline{f}$ = 1 in Word 6 of Cards CCCN101 through CCCN109), then enter all four words for the appropriate CCFL model if values different from the default values are desired.

W1(R) Junction hydraulic diameter, D_j (m, ft). This quantity is the junction hydraulic diameter used in the CCFL correlation equation, interphase drag, and form loss Reynolds number. This number must be $\geq$ 0. This number should be computed from $4.0 \bullet \frac{\text{junction area}}{\text{wetted perimeter}}$.

If a zero is entered or if the default is used, the junction diameter is computed from $2.0 \bullet \frac{\text{junction area}}{\pi}$ of the respective junction. See Word 3 of Cards CCCN101 through CCCN109 for the junction area. For a TURBINE component, the default is used.

W2(R) Flooding correlation form, β. If zero, the Wallis CCFL form is used. If one, the Kutateladze CCFL form is used. If between zero and one, Bankoff weighting between the Wallis and Kutateladze CCFL forms is used. This number must be ≥ 0 and ≤ 1. The default value is 0 (Wallis form). See Section 3 of Volume I for details of the model. This is only used for the BRANCH component.

W3(R) Vapor/gas intercept, c. This quantity is the vapor/gas intercept used in the CCFL correlation (when $H_f^{1/2} = 0$) and must be > 0. The default value is 1. This is only used for the BRANCH component.

W4(R) Slope, m. This quantity is the slope used in the CCFL correlation and must be > 0. The default value is 1. This is only used for the BRANCH component.

7.7.14 Cards CCCN112, Branch, Separator, Jetmixer, Turbine, Feedwater Heater, or ECC Mixer Junction Form Loss Data

These cards are optional for the BRANCH, SEPARATR, JETMIXER, TURBINE, FWHTR, and ECCMIX components. The value of N should follow the same approach as used in Cards CCCN101 through CCCN109. The user-specified form loss coefficients are given in Words 4 and 5 of Cards CCCN101 through CCCN109 if these cards are not entered. If these cards are entered, the form loss coefficients depend on the flow conditions and are calculated from

$$K_F = A_F + B_F Re^{-C_F}$$

$$K_R = A_R + B_R Re^{-C_R}$$

where K_F and K_R are the forward and reverse form loss coefficients; A_F, A_R, B_F, B_R, C_F, and C_R are user-specified constants. A_F and A_R are Words 4 and 5 of Cards CCCN101 through CCCN109; B_F, B_R, C_F, and C_R are Words 1, 2, 3, and 4 on these cards (CCCN112); and Re is the junction Reynolds number based on mixture fluid properties. If these cards are being used for the form loss calculation, then enter all four words for the appropriate expression. For a TURBINE component, if these cards are entered, calculated loss coefficients (K_F and K_R) are multiplied by a multiplier (See Card CCC400).

W1(R) B_F (≥ 0). This quantity must be greater than or equal to zero.

W2(R) C_F (≥ 0). This quantity must be greater than or equal to zero.

W3(R) B_R (≥ 0). This quantity must be greater than or equal to zero.

W4(R) C_R (≥ 0). This quantity must be greater than or equal to zero.

7.7.15 Card CCCN113, Branch, Separator, Jetmixer, Turbine, Feedwater Heater, or ECC Mixer Junction Face Placement Data

These cards are optional for the BRANCH, SEPARATR, JETMIXER, FWHTR, and ECCMIX components, and they are not allowed for a TURBINE component. The value of N should follow the same approach as used in Cards CCCN101 through CCCN109. It is used to improve the graphical display of the hydrodynamic nodes. It is used to resolve problems with converging and diverging flows, that is, multiple junctions attached to the same face of a volume. With the standard input, each junction attached to the same face of a volume would be superimposed on the graphical display since each junction would be attached to the center of the volume face. For junctions with this card, the point of leaving the “from” volume and entering the “to” volume is allowed to be other than the center of the faces. The volume face is perpendicular to one of the coordinate directions. The attachment position is given by specifying the coordinates on the remaining two directions. Four words are entered on the card; two words for the coordinates for the “from” face, and two words for the two coordinates for the “to” face. The coordinates are entered in the order x, then y, then z, skipping the coordinate direction perpendicular to the face. The values are dimensionless. The actual coordinates are given by these values times the position change in moving from the volume center to the face in that direction. A value of 0.0 means no change from the center of the volume in that direction, and 1.0 means move to the edge of the volume in that direction. Positive or negative numbers can be entered, and the sign indicates moving in the positive or negative direction along that coordinate. A value greater than 1.0 can be used to get separation; the maximum allowed value is 25.0. The default is 0.0.

W1(R) First remaining coordinate value for the “from” face (dimensionless).

W2(R) Second remaining coordinate value for the “from” face (dimensionless).

W3(R) First remaining coordinate value for the “to” face (dimensionless).

W4(R) Second remaining coordinate value for the “to” face (dimensionless).

7.7.16 Cards CCCN201, Branch, Separator, Jetmixer, Turbine, Feedwater Heater, or ECC Mixer Junction Initial Conditions

These cards are required depending on the value of nj as described for Cards CCCN101 through CCCN109. The value of N should follow the same approach as used in Cards CCCN101 through CCCN109. A 90% extraction limit during input processing is tested for the vapor/gas at the separator vapor/gas outlet junction and for the liquid at the separator liquid fall back junction. If greater than 90%, an input error occurs.

W1(R) Initial liquid velocity or initial liquid mass flow rate (velocity in m/s, ft/s or mass flow rate in kg/s, lb_m/s), depending on control Word 2 of Card CCC0001.

W2(R) Initial vapor/gas velocity or initial vapor/gas mass flow rate (velocity in m/s, ft/s or mass flow rate in kg/s, lb_m/s), depending on control Word 2 of Card CCC0001.

W3(R) Interface velocity (m/s, ft/s). Enter zero.

7.7.17 Card CCC0300, Turbine/Shaft Geometry

If a TURBINE component is specified, the following words are used (this card is required for TURBINE components):

W1(R) Rated turbine stage shaft speed, ω (rad/s, rev/min). This speed should equal the shaft speed used in the SHAFT component.

W2(R) Inertia of rotating stages in stage group, I_{tn} ($kg \cdot m^2$, $lb_m \cdot ft^2$).

W3(R) Shaft friction coefficient, f_i, ($N \cdot m \cdot s$, $lb_f \cdot ft \cdot s$). The term $f_i\omega$ is the frictional torque. The frictional torque is used by the SHAFT component.

W4(I) Shaft component number to which the turbine stage is connected.

W5(R) Disconnect trip number. If zero, the turbine is always connected to the shaft, If nonzero, the turbine is connected to the shaft when the trip is false and disconnected when the trip is true.

W6(R) Turbine moisture separator efficiency. Omit this word if there is no second junction for the turbine. Input of this word when there is no second junction will cause an informative message to be printed. If zero, signifies that the second turbine junction is a steam extraction junction and if greater than zero, signifies that the second turbine junction is a moisture separator junction. This parameter is optional, has a default value of zero, and has a maximum value of one.

7.7.18 Card CCC0302, Turbine/Shaft Variable Frictional Torque

This card is used only for TURBINE components and is optional. If this card is not entered, the frictional torque equals $f_i\omega$, where f_i is obtained from Word 3 of Card CCC0300. If this card is entered, the frictional torque is computed from

$$\tau_{fr} = \pm\left(\tau_{fr0} + \tau_{fr1}\left|\frac{\omega}{\omega_R}\right|^{x1} + \tau_{fr2}\left|\frac{\omega}{\omega_R}\right|^{x2} + \tau_{fr3}\left|\frac{\omega}{\omega_R}\right|^{x3} + f_i\omega\right)$$

where ω is the turbine speed and ω_R is the input rated speed of the turbine and is obtained from Card CCC0400. The turbine frictional torque is negative if $\frac{\omega}{\omega_R} > 0$, and it is positive if $\frac{\omega}{\omega_R} < 0$. Fewer than seven words may be entered. Entering a total of one word, three words, five words, or seven words in allowed. Entering a total of two words, four words, or six words is not allowed. The default values are 0.0 for the coefficients.

W1(R) Constant frictional torque coefficient, τ_{fr0} (N-m, lb_f-ft).

W2(R) First frictional torque coefficient, τ_{fr1} (N-m, lb_f-ft).

W3(R) First exponent, x1. This is used on the speed ratio used with the frictional torque coefficient τ_{fr1}. If not entered, a default value of 1.0 is used.

W4(R) Second frictional torque coefficient, τ_{fr2} (N-m, lb_f-ft).

W5(R) Second exponent, x2. This is used on the speed ratio used with the frictional torque coefficient τ_{fr2}. If not entered, a default value of 2.0 is used.

W6(R) Third frictional torque coefficient, τ_{fr3} (N-m, lb_f-ft).

W7(R) Third exponent, x3. This is used on the speed ratio used with the frictional torque coefficient τ_{fr3}. If not entered, a default value of 3.0 is used.

7.7.19 Card CCC0308, Turbine Variable Inertia

This card is used only for the TURBINE components and is optional. If this card is not entered, the moment of inertia of the turbine stage is constant and is given by Word 2 of Card CCC0300. If this card is entered, the moment of inertia, I_t, of the turbine is calculated as

$$I_t = I_{tn} \qquad \text{for } \left|\frac{\omega}{\omega_R}\right| < S_{TI}$$

$$I_t = I_{t0} + I_{t1}\left|\frac{\omega}{\omega_R}\right| + I_{t2}\left|\frac{\omega}{\omega_R}\right|^2 + I_{t3}\left|\frac{\omega}{\omega_R}\right|^3 \qquad \text{for } \left|\frac{\omega}{\omega_R}\right| \geq S_{TI}$$

where ω is the turbine speed, ω_R is the input rated turbine speed from Word 6 of Card CCC0400, and I_{tn} is from Word 2 of Card CCC0400. Fewer than five words may be entered. The default values of the coefficients are 0.0.

W1(R) Turbine inertia critical speed ratio, S_{TI}. When the absolute value of the turbine speed ratio is greater than or equal to S_{TI}, the cubic expression for the inertia is used. When the absolute value of the turbine speed ratio is less than S_{TI}, the inertia (I_{tn}) from Word 2 of Card CCC0300 is used.

W2(R) Constant inertia coefficient, I_{t0} (kg-m^2, lb$_m$-ft^2).

W3(R) Linear inertia coefficient, I_{t1} (kg-m^2, lb$_m$-ft^2).

W4(R) Quadratic inertia coefficient, I_{t2} (kg-m^2, lb$_m$-ft^2).

W5(R) Cubic inertia coefficient, I_{t3} (kg-m^2, lb$_m$-ft^2).

7.7.20 Cards CCCN901 through CCCN909, Separator Junction Maximum Volume Fractions

These cards are optional for the SEPARATR component, and they are not allowed for the BRANCH, JETMIXER, TURBINE, FWHTR, and ECCMIX components. The value of N should follow the same approach as used for Cards CCCN101 through CCCN109. The defaults indicated for each word are used if no cards are entered.

W1(R) Enter 1.0. The default value is 1.0.

W2(R) Enter 1.0. The default value is 1.0.

W3(R) Maximum volume fraction. This entry is for the SEPARATR component. This is only used for the simple separator. For the output junction (N=1), this quantity (VGMAX) is the vapor/gas volume (void) fraction used when the vapor/gas volume (void) fraction in the separator exceeds VOVER (Cards CCC1101 through CCC1109, Word 7). For the liquid fallback junction (N=2), this quantity (VFMAX) is the liquid volume fraction used when the liquid volume fraction in the separator exceeds VUNDER (Cards CCC2101 through CCC2109, Word 7). This word is not used for the separator inlet junction (N=3). The default value is 1.0.

7.7.21 Card CCC0400, Turbine Performance Data

This card is used only for TURBINE components and is required for TURBINE components.

W1(I) Turbine type

0 = Two-row impulse stage group.

1 = General impulse-reaction stage group.

2 = Constant efficiency stage group.

3 = User specified efficiency stage group.

W2(R) Actual efficiency η_o at the maximum efficiency design point.

W3(R) Design reaction fraction, r. This is the fraction of the enthalpy decrease that takes place in the rotating blade system.

W4(R) Mean stage radius, R (m, ft).

W5(R) Rated power, $\dot{W}_R$ (W, MW). This word is required for a Type-3 turbine and is not used for the other types.

W6(R) Rated speed, ω_R (rad/s, rev/min). This word is optional and if not entered is set to Word 1 of Card CCC0300.

W7(R) User-specified control variable number for the multiplier on the user-specified form loss (forward and reverse) for the junction identified in Word 8. If not entered, a multiplier of 1.0 is specified is applied to all turbine junctions.

W8(I) Junction number. This is the junction number of the junction to which the form loss multiplier (see Word 7) will be applied. It must be a junction in this TURBINE component. If Word 7 is supplied, then Word 8 must also be supplied.

7.7.22 Card CCC0401, Type-3 Turbine Performance Data

This card is required only for Type-3 (see Word 1 of Card CCC0400) TURBINE components. The efficiency is calculated as a function of normalized speed and load

$$\eta = \eta_R\left[a_0 + a_1\left(\frac{\omega}{\omega_R}\right) + a_2\left(\frac{\omega}{\omega_R}\right)^2 + a_3\left(\frac{\omega}{\omega_R}\right)^3\right]\left[b_0 + b_1\frac{\dot{W}}{\dot{W}_R} + b_2\frac{\dot{W}}{\dot{W}_R}^2 + b_3\frac{\dot{W}}{\dot{W}_R}^3\right] \bullet \mathrm{Mult}$$

where η_R is obtained from Word 2 of Card CCC0400, ω is the turbine speed, ω_R is the rated turbine speed and is obtained form Word 6 of Card CCC0400, $\dot{W}$ is the turbine power, and $\dot{W}_R$ is the rated turbine power and is obtained form Word 5 of Card CCC0400. Fewer than nine words may be entered. The default values are 1.0 for a_0, b_0, and Mult and 0.0 for the other coefficients.

W1(R) Constant speed coefficient, a_0.

W2(R) Linear speed coefficient, a_1.

W3(R) Quadratic speed coefficient, a_2.

W4(R) Cubic speed coefficient, a_3.

W5(R) Constant load coefficient, b_0.

W6(R) Linear load coefficient, b_1.

W7(R) Quadratic load coefficient, b_2.

W8(R) Cubic load coefficient, b_3.

W9(I) User-specified control variable number for the multiplier on the calculated efficiency. The multiplier is the variable Mult in the above equation.

7.7.23 Card CCC0500, General Electric (GE) Separator Data

This card is optional for the General Electric (GE) separator. If this card is missing and the GE separator has been specified on Card CCC0002, the default values will be used. If the card is present, all eight values must be specified.

W1(R) Radius of larger pickoff ring at first stage of a two-stage separator (m, ft). Default = 0.0857208 m.

W2(R) Standpipe flow area (m^2, ft^2). Default = 0.018637 m^2.

W3(R) Separator nozzle exit area (m^2, ft^2). Default = 0.01441 m^2.

W4(R) Radius of separator hub at inlet (m, ft). Default = 0.0809585 m.

W5(R) Swirl vane angle relative to the horizontal (degrees). Default = 48 degrees.

W6(R) Liquid carryover coefficient for upper separating stages. Default = 0.009 for two-stage separator and 0.110 for three-stage separator.

W7(R) Vapor/gas carryunder coefficient for upper separating stages. Default = 0.0004.

W8(R) Axial distance between exit of first stage discharge passage and swirl vanes (m, ft). Default = 0.2127 m for two-stage separator and 0.45083 m for three-stage separator.

7.7.24 Card CCC0501, General Electric (GE) Separator First Stage Data

This card is optional for the General Electric (GE) separator. If this card is missing and the GE separator has been specified on Card CCC0002, the default values will be used. If the card is present, all nine values must be specified.

W1(R) Liquid film void profile coefficient. Default = 110.0.

W2(R) Vapor/gas core void profile coefficient. Default = 0.5.

W3(R) Separator wall inner radius (m, ft). Default = 0.10794 m.

W4(R) Pickoff ring inner radius (m, ft). Default = 0.069875 m for two-stage separator and 0.0857208 m for three-stage separator.

W5(R) Discharge passage flow area (m^2, ft^2). Default = 0.0415776 m^2 for two-stage separator and 0.0096265 m^2 for three-stage separator.

W6(R) Discharge passage hydraulic diameter (m, ft). Default = 0.045558 m for two-stage separator and 0.025399 m for three-stage separator.

W7(R) Separating barrel length (m, ft). Default = 0.877845 m for two-stage separator and 1.0699 m for three-stage separator.

W8(R) Discharge passage loss coefficient. Default = 10.0 for two-stage separator and 2.5 for three-stage separator.

W9(R) Discharge passage effective $\frac{L}{D}$ coefficient. Default = 450.0 for two-stage separator and 53.44 for three-stage separator.

7.7.25 Card CCC0502, General Electric (GE) Separator Second Stage Data

This card is optional for the General Electric (GE) separator. If this card is missing and the GE separator has been specified on Card CCC0002, the default values will be used. If the card is present, all nine values must be specified.

W1(R) Liquid film void profile coefficient. Default = 20.0.

W2(R) Vapor/gas core void profile coefficient. Default = 0.25.

W3(R) Separator wall inner radius (m, ft). Default = 0.06985 m for two-stage separator and 0.10794 m for three-stage separator.

W4(R) Pickoff ring inner radius (m, ft). Default = 0.06032 m for two-stage separator and 0.0952453 m for three-stage separator.

W5(R) Discharge passage flow area (m^2, ft^2). Default = 0.0029133 m^2 for two-stage separator and 0.0096265 m^2 for three-stage separator.

W6(R) Discharge passage hydraulic diameter (m, ft). Default = 0.0121699 m for two-stage separator and 0.025399 m for three-stage separator.

W7(R) Separating barrel length (m, ft). Default = 0.16255 m for two-stage separator and 0.384156 m for three-stage separator.

W8(R) Discharge passage loss coefficient. Default = 0.5 for two-stage separator and 1.429 for three-stage separator.

W9(R) Discharge passage effective $\frac{L}{D}$ coefficient. Default = 95.85 for two-stage separator and 194.64 for three-stage separator.

7.7.26 Card CCC0503, General Electric (GE) Separator Third Stage Data

This card is optional for the General Electric (GE) separator. If this card is missing and the GE three-stage separator has been specified on Card CCC0002, the default values will be used. If the card is present, all nine values must be specified.

W1(R) Liquid film void profile coefficient. Default = 20.0.

W2(R) Vapor/gas core void profile coefficient. Default = 0.55.

W3(R) Separator wall inner radius (m, ft). Default = 0.10794 m.

W4(R) Pickoff ring inner radius (m, ft). Default = 0.0984201 m.

W5(R) Discharge passage flow area (m^2, ft^2). Default = 0.0096265 m^2.

W6(R) Discharge passage hydraulic diameter (m, ft). Default = 0.025399 m.

W7(R) Separating barrel length (m, ft). Default = 0.384156 m.

W8(R) Discharge passage loss coefficient. Default = 2.563.

W9(R) Discharge passage effective $\frac{L}{D}$ coefficient. Default = 424.96.

7.7.27 Card CCC0600, General Electric (GE) Dryer Data

This card is optional for the General Electric (GE) dryer. If this card is missing and the GE dryer has been specified on Card CCC0002, the default values will be used. If the card is present, all three values must be specified.

W1(R) Vapor/gas velocity at dryer inlet below which there is 0% liquid carryover (m/s, ft/s). Default = 1.5 m/s.

W2(R) Vapor/gas velocity at dryer inlet above which there is 100% liquid carryover (m/s, ft/s). Default = 6.0 m/s.

W3(R) Range of dryer inlet quality where dryer carryover changes from 0 to 100% when dryer inlet vapor/gas velocity is between lower and upper values. Default = 0.05.

7.7.28 Card CCC0701 Branch, Separator, Jetmixer, Turbine, Feedwater Heater, or ECC Mixer Volume Noncondensable Mass Fractions

This card is optional. If omitted, the noncondensable mass fractions are obtained from the noncondensable mass fractions entered on Card 115.

W1-WN(R) Mass fractions for the noncondensable species entered on Card 110. The number of words should be the same as on Card 110. The noncondensable mass fractions must sum to 1.0 within a relative error of 1.0×10^{-10}.

7.8 Valve Junction Component

7.8.1 Card CCC0000, Valve Name and Type

This card is required.

W1(A) Component name. Use a name descriptive of the component's use in system. A limit of 8 characters is allowed for most computers, e.g., work stations, CRAY, and IBM computers.

W2(A) Component type. Enter VALVE to indicate a valve component or the command DELETE. The command DELETE is allowed only in RESTART problems, and the component number must be an existing component at the time of restart. The DELETE command deletes the component.

For major edits, minor edits, and plot variables, the junction in the valve junction component is numbered CCC000000.

7.8.2 Cards CCC0101 through CCC0109, Valve Junction Geometry

This card (or cards) is required for valve junction components.

W1(I) From connection code to a component. This refers to the component from which the junction coordinate direction originates. An old or an expanded format can be used to connect volumes. In the old format (only allowed for connection from 1-D components), use CCC000000 if the connection is from the inlet side of the component and use CCC010000 if the connection is from the outlet side of the component. In the expanded format, the connection code for 1-D components is CCCXX000F [where CCC is the component number, XX is the volume number (greater than 00 and less than 100) for pipes/annuli/pressurizers, XX is 01 for all other 1-D components, and F indicates the face number], and the connection code for 3-D components is CCCXYYZZF [where CCC is the component number, X is the first coordinate direction (x or r) position number, YY is the second coordinate direction (y or θ) position number, ZZ is the third coordinate direction (z) position number, and F indicates the face number]. A nonzero F specifies the expanded format. The number F equal to 1 and 2 specifies the inlet and outlet faces for the first coordinate direction (x or r), which is a 1-D volume's coordinate direction (x) (see Section 2.1 of Volume II of this manual). The number F equal to 3 through 6 specifies crossflow (y or z) for 1-D volumes. The number F equal to 3 and 4 would specify inlet and outlet faces for the second coordinate direction (y or θ); F equal to 5 and 6 would do the same for the third coordinate direction (z). For connecting from a time-dependent volume using the old format, both CCC000000 and CCC010000 are allowed. For connecting from a time-dependent volume using the expanded format, only the number F equal to 1 or 2 is allowed. Section 4.4 in this Appendix discusses this further.

W2(I) To connection code to a component. This refers to the component at which the junction coordinate direction ends. See the description for W1 above; use to instead of from.

W3(R) Junction flow area (m^2, ft^2). This quantity is the full open area of the valve except in the case of a relief valve. For valves other than motor, servo, and relief valves, if this area is input as zero, the area is set to the minimum area of adjoining volumes; if nonzero, this area is used. For motor or servo valves, this quantity must be greater than zero. For relief valves, this term is the valve inlet throat area; if this term is input as zero, it will default to the area calculated from the inlet diameter term input on Cards CCC0301 through CCC0309, in which case the inlet diameter term cannot be input as zero. For relief valves, if both this area and the inlet diameter are input as nonzero, this area will be used but must agree with the area calculated from the inlet diameter within 10^{-5} m^2; however, if this area is input as nonzero and the inlet diameter is input as zero, the inlet diameter will default to the diameter calculated from this area. When an abrupt area change model is specified, the area must be less than or equal to the minimum of the adjoining volume flow areas. A closed valve is treated as a time dependent junction with no flow.

W4(R) Reynolds number independent forward flow energy loss coefficient, A_F. This quantity will be used in each of the phasic momentum equations when the junction velocity of that phase is positive or zero. A variable loss coefficient may be specified (see Section 7.8.4 of this Appendix). The interpretation and use of the coefficient depends on whether the smooth or abrupt area change option is specified or grid spacers are modeled (see Section 2.4.1 of Volume II of this manual). This quantity must be greater than or equal to zero. See Section 5.6 of Volume V for more information.

W5(R) Reynolds number independent reverse flow energy loss coefficient, A_R. This quantity will be used in each of the phasic momentum equations when the junction velocity of that phase is negative. A variable loss coefficient may be specified (see Section 7.8.4 of this Appendix). The interpretation and use of the coefficient depends on whether the smooth or abrupt area change option is specified or grid spacers are modeled (see Section 2.4.1 of Volume II of this manual). This quantity must be greater than or equal to zero. See Section 5.6 of Volume V for more information.

W6(I) Junction control flags. This word has the packed format jefvcahs. It is not necessary to input leading zeros.

The digit j is not used and should be input as zero (j = 0). The jet junction model is not used.

The digit e specifies the modified PV term in the energy equations; e = 0 specifies that the modified PV term will not be applied, and e = 1 specifies that the modified PV term will be applied.

The digit f specifies CCFL options; f = 0 specifies that the CCFL model will not be applied, and f = 1 specifies that the CCFL model will be applied.

The digit v specifies stratification entrainment/pullthrough options, where this model is for junctions connected to a horizontal or vertical volume; v = 0 specifies the model is not applied; v = 1 specifies an upward-oriented junction from a horizontal volume (offtake volume must be vertical); v = 2 specifies a downward-oriented junction from a horizontal volume (offtake volume must be vertical); and v = 3 specifies a centrally (side) located junction from a horizontal or vertical volume. For v = 1 or 2, the horizontal volume flow area must be greater than or equal to the offtake volume flow area.

The digit c specifies choking options; c = 0 specifies that the standard choking model will be applied, c = 1 specifies that neither choking model will be applied, and c = 2 specifies that the modified Henry-Fauske choking model will be applied.

The digit a specifies area change options (see Volume II, Section 2.4.1 and Volume V, Section 4.6.3); a = 0 specifies either a smooth area change or no area change, a = 1

specifies the full abrupt area change model (code-calculated K_{loss}, area apportioning at a branch, restricted junction area, and extra interphase drag), and a = 2 specifies the partial abrupt area change model (no code-calculated K_{loss}, but includes area apportioning at a branch, restricted junction area, and extra interphase drag). All options may be input for a motor or servo valve. If the smooth area change option is input, then a C_v table must be input; or, if no C_v table is input, then one of the abrupt area change options must be input. For all other valves, one of the abrupt area change options must be input. It is recommended that the abrupt area change model (a = 1 or a = 2) be used at branches.

The digit h specifies nonhomogeneous or homogeneous; h = 0 specifies the nonhomogeneous (two-velocity momentum equations) option, and h = 1 or 2 specifies the homogeneous (single-velocity momentum equation) option. For the homogeneous option (h = 1 or 2), the major edit printout will show h = 1.

The digit s specifies momentum flux options; s = 0 specifies momentum flux in both the to volume and the from volume, s = 1 specifies momentum flux in the from volume but not in the to volume, s = 2 specifies momentum flux in the to volume but not in the from volume, and s = 3 specifies no momentum flux in either the to or the from volume.

The meaning of the following three words (W7, W8, and W9) are different depending on the choking model chosen with the c junction control flag.

If c = 0 or c = 1, then the following definitions are used:

W7(R) Subcooled discharge coefficient. This quantity is applied only to subcooled liquid choked flow calculations if c = 0 and is not used if c = 1. The quantity must be > 0 and ≤ 2.0. If W7, W8, and W9 are missing, then W7, W8, and W9 are set to 1.0.

W8(R) Two-phase discharge coefficient. This quantity is applied only to two-phase choked flow calculations if c = 0 and is not used if c = 1. The quantity must be > 0 or ≤ 2.0. If W7 is entered, and W8 and W9 are missing, then W8 and W9 are set to 1.0.

W9(R) Superheated discharge coefficient. This quantity is applied only to superheated vapor/gas choked flow calculations if c = 0 and is not used if c = 1. The quantity must be > 0 and ≤ 2.0. If W7 and W8 are entered, and W9 is missing, then W9 is set to 1.0.

If c = 2, then the following definitions are used:

W7(R) This word is the discharge coefficient. The quantity must be > 0.0 and ≤ 2.0. If W7 and W8 are missing, then W7 is set to 1.0 and W8 is set to 0.14.

W8(R) This word is the thermal nonequilibrium constant. If W8 is < 0.01, the equilibrium option is used and W8 is reset to 0.0. If W8 is > 1000.0, the frozen option is used and W8 is reset to 1000.0. If W7 is entered and W8 is missing, then W8 is set to 0.14.

W9(R) This word is not used (do not enter).

7.8.3 Card CCC0110, Valve Junction Diameter and CCFL Data

This card is optional. The defaults indicated for each word are used if the card is not entered. If this card is being used to specify the junction hydraulic diameter for the interphase drag calculation (i.e., f = 0 in Word 6 of Cards CCC0101 through CCC0109), then the diameter should be entered in Word 1 and any allowable values should be entered in Words 2 through (will not be used). If this card is being used for the CCFL model (i.e., f = 1 in Word 6 of Cards CCC0101 through CCC0109), then enter all four words for the appropriate CCFL model if values different from the default values are used.

W1(R) Junction hydraulic diameter, D_j (m, ft). This is the junction hydraulic diameter used in the CCFL correlation equation, interphase drag, and form loss Reynolds number. This number must be $\geq$ 0. This number should be computed from $4.0 \bullet \left(\frac{\text{junction area}}{\text{wetted perimeter}}\right)$. If a zero is entered or if the default is used, the junction diameter is computed from $2.0 \bullet \left(\frac{\text{junction area}}{\pi}\right)^{0.5}$. See Word 3 of Cards CCC0101 through CCC0109 for the junction area.

W2(R) Flooding correlation form, β. If zero, the Wallis CCFL form is used. If one, the Kutateladze CCFL form is used. If between zero and one, Bankoff weighting between the Wallis and Kutateladze CCFL forms is used. This number must be $\geq$ 0 and $\leq$ 1. The default value is 0 (Wallis form). See Section 3 of Volume I for details of the model.

W3(R) Vapor/gas intercept, c. This is the vapor/gas intercept used in the CCFL correlation (when $H_f^{1/2} = 0$) and must be > 0. The default value is 1.

W4(R) Slope, m. This is the slope used in the CCFL correlation and must be > 0. The default value is 1.

7.8.4 Card CCC0111, Valve Junction Form Loss Data

This card is optional. The user-specified form loss coefficients are given in Words 4 and 5 of Cards CCC0101 through CCC0109 if this card is not entered. If this card is entered, the form loss coefficients depend on the flow conditions and are calculated from

$$K_F = A_F + B_F Re^{-C_F}$$

$$K_R = A_R + B_R Re^{-C_R}$$

where K_F and K_R are the forward and reverse form loss coefficients; A_F, A_R, B_F, B_R, C_F, and C_R are user-specified constants. A_F and A_R are Words 4 and 5 of Cards CCC0101 through CCC0109; B_F, B_R, C_F, and C_R are Words 1, 2, 3, and 4 on this card (CCC0111); and Re is the junction Reynolds number based on mixture fluid properties. If this card is being used for the form loss calculations, then enter all four words for the appropriate expression.

W1(R) B_F (≥ 0). This quantity must be greater than or equal to zero.

W2(R) C_F (≥ 0). This quantity must be greater than or equal to zero.

W3(R) B_R (≥ 0). This quantity must be greater than or equal to zero.

W4(R) C_R (≥ 0). This quantity must be greater than or equal to zero.

7.8.5 Card CCC0113, Valve Junction Face Placement Data

This card is optional. It is used to improve the graphical display of the hydrodynamic nodes. It is used to resolve problems with converging and diverging flows, that is, multiple junctions attached to the same face of a volume. With the standard input, each junction attached to the same face of a volume would be superimposed on the graphical display since each junction would be attached to the center of the volume face. For junctions with this card, the point of leaving the “from” volume and entering the “to” volume is allowed to be other than the center of the faces. The volume face is perpendicular to one of the coordinate directions. The attachment position is given by specifying the coordinates on the remaining two directions. Four words are entered on the card; two words for the coordinates for the “from” face, and two words for the two coordinates for the “to” face. The coordinates are entered in the order x, then y, then z, skipping the coordinate direction perpendicular to the face. The values are dimensionless. The actual coordinates are given by these values times the position change in moving from the volume center to the face in that direction. A value of 0.0 means no change from the center of the volume in that direction, and 1.0 means move to the edge of the volume in that direction. Positive or negative numbers can be entered, and the sign indicates moving in the positive or negative direction along that coordinate. A value greater than 1.0 can be used to get separation; the maximum allowed value is 25.0. The default is 0.0.

W1(R) First remaining coordinate value for the “from” face (dimensionless).

W2(R) Second remaining coordinate value for the “from” face (dimensionless).

W3(R) First remaining coordinate value for the “to” face (dimensionless).

W4(R) Second remaining coordinate value for the “to” face (dimensionless).

7.8.6 Card CCC0201, Valve Junction Initial Conditions

This card is required for valve junction components.

W1(I) Control word. If zero, the next two words are velocities; if one, the next two words are mass flow rates.

W2(R) Initial liquid velocity or initial liquid mass flow rate. This quantity is either velocity (m/s, ft/s) or mass flow rate (kg/s, lb_m/s), depending on the control word.

W3(R) Initial vapor/gas velocity or initial vapor/gas mass flow rate This quantity is either velocity (m/s, ft/s) or mass flow rate (kg/s, lb_m/s), depending on the control word.

W4(R) Interface velocity (m/s, ft/s). Enter zero.

7.8.7 Card CCC0300, Valve Type

This card is required to specify the valve type.

W1(A) Valve type. This word must contain one of the following: CHKVLV for a check valve, TRPVLV for a trip valve, INRVLV for an inertial swing check valve, MTRVLV for a motor valve, SRVVLV for a servo valve, or RLFVLV for a relief valve.

7.8.8 Cards CCC0301 through CCC0399, Valve Data and Initial Conditions

These cards are required for valve junction components. Six different types of valves are allowed. The following words may be placed on one or more cards, and the card numbers need not be consecutive. The card format of these cards depends on the valve type.

7.8.8.1 Check Valve. This behaves as an <u>on</u>, <u>off</u> switch. If the valve is <u>on</u>, then it is fully open; and if the valve is <u>off</u>, it is fully closed.

W1(I) Check valve type. Enter +1 for a static pressure-controlled check valve (no hysteresis), 0 for a static pressure/flow-controlled check valve (has hysteresis effect), or -1 for a static/dynamic pressure-controlled check valve (has hysteresis effect). It is recommended that 0 be used for most calculations, as it is more stable (i.e., less noisy and less oscillations) than +1 or -1.

W2(I) Check valve initial position. The valve is initially open if zero, closed if one.

W3(R) Closing back pressure (Pa, lb_f/in^2).

W4(R) Leak ratio. This is the fraction of the junction area for the leakage when the valve is nominally closed. If omitted (the default value is zero) or input as zero, then either the smooth or the abrupt area change model may be specified. If input as nonzero, then the abrupt area change model must be specified.

7.8.8.2 Trip Valve. This behaves as an on, off switch as described for the check valve.

W1(I) Trip number. This must be a valid trip number. If the trip is false, the valve is closed; if the trip is true, the valve is open.

7.8.8.3 Inertial Valve. This behaves realistically in that the valve area varies considering the hydrodynamic forces and the flapper inertia, momentum, and angular acceleration. The abrupt area change model must be specified. The body forces from the "to" volume are applied to the flapper.

W1(I) Latch option. The valve can open and close repeatedly if the latch option is zero. When W1 = 1, the valve either opens or closes only once if the initial angle is between the maximum and minimum. If the flapper starts at either the maximum or minimum angle it will not move. When W1 = 2, the flapper will latch only at the maximum position. If it starts at the maximum, it will not move.

W2(I) Valve initial condition. The valve is initially open if zero, initially closed if one.

W3(R) Cracking pressure (Pa, lb_f/in^2).

W4(R) Leakage fraction. Fraction of the junction area for leakage when the valve is nominally closed.

W5(R) Initial flapper angle (degrees). The flapper angle must be within the minimum and maximum angles specified in Words 6 and 7.

W6(R) Minimum flapper angle (degrees). This must be greater than or equal to zero.

W7(R) Maximum flapper angle (degrees). This must be greater than the minimum angle specified in Word 6.

W8(R) Moment of inertia of valve flapper ($kg \bullet m^2$, $lb_m \bullet ft^2$).

W9(R) Initial angular velocity (rad/s).

W10(R) Moment length of flapper (m, ft).

W11(R) Radius of flapper (m, ft).

W12(R) Mass of flapper (kg, lb_m).

7.8.8.4 Motor Valve. This behaves realistically in that the valve area varies as a function of time by either of two models specified by the user. The user must also select the model for valve hydrodynamic losses by specifying either the smooth or the abrupt area change model. If the smooth area change model is selected, a table of flow coefficients must also be input as described in Cards CCC0400 through CCC0499, Valve CSUBV Table, Section 7.8.9. If the abrupt area change model is selected, a flow coefficient table cannot be input.

W1(I) Open trip number.

W2(I) Close trip number. Both the open and close trip numbers must be valid trips. When both trips are false, the valve remains at its current position. When one of the trips is true, the valve opens or closes according to the valve change rate (see Word 3 and Word 5) depending on which trip is true. The transient will be terminated if both trips are true at the same time.

W3(R) Valve change rate (s^{-1}). If Word 5 is not entered, this quantity is the rate of change of the normalized valve area as the valve opens or closes. If Word 5 is entered, this quantity is the rate of change of the normalized valve stem position. This word must be greater than zero.

W4(R) Initial position. This number is the initial normalized valve area or the initial normalized stem position depending on Word W5. This quantity must be between 0.0 and 1.0.

W5(I) Valve table number. If this word is omitted or input as zero, the normalized valve area is determined by the valve change rate and the trips. If this word is input as nonzero, the normalized valve stem position is determined by the valve change rate and the trips; and the normalized valve area is determined from a general table (indicated by this word) containing normalized valve area versus normalized valve stem position. Input for general tables is discussed in Section 11. For this case, the normalized valve stem position is input as the *argument value* and the normalized valve area is input as the *function value*.

7.8.8.5 Servo Valve. This behaves as described for a motor valve except that the valve flow area or valve stem position is calculated by a control system. Input for control systems is discussed in Section 13. Input specifying the hydrodynamic losses for servo valves is also identical to that for motor valves.

W1(I) Control variable number. The value of the indicated control variable is either the normalized valve area or the normalized valve stem position, depending on whether Word 2 is entered.

W2(I) Valve table number. If this word is not entered, the control variable value is the normalized flow area. If this word is entered, the control variable value is the normalized stem position, and the normalized valve area is determined from a general table (indicated

by this word) containing a table of normalized valve area versus normalized valve stem position. Input for general tables is discussed in Section 11. For this case, the normalized valve stem position is input as the *argument value* and the normalized valve areas is input as the *function value*.

7.8.8.6 Relief Valve. The valve area varies, considering the hydrodynamic forces and the valve mass, momentum, and acceleration. The abrupt area change model must be specified. The junction area input by Cards CCC0101 through CCC0199 is the valve inlet area.

W1(I) Valve initial condition. The valve is initially closed if zero, open if one.

W2(R) Inlet diameter (m, ft). This is the inside diameter of the valve inlet. If this term is input as zero, it will default to the diameter calculated from the junction area input on Cards CCC0101 through CCC0109. If both this diameter and the junction area are input as nonzero, care must be taken that these terms are input with enough significant digits so that the areas agree within 10^{-5} m^2. If the junction area is input as zero, then this diameter must be input as nonzero.

W3(R) Valve seat diameter (m, ft). Nonzero input is required. This term is the outside diameter of the valve seat, including the minimum diameter of the inner adjustment ring. This term must also be greater than or equal to the inlet diameter.

W4(R) Valve piston diameter (m, ft). If input as zero, the default is to the valve seat diameter.

W5(R) Valve lift (m, ft). Nonzero input is required. This is the distance the valve piston rises above the valve seat at the fully open position.

W6(R) Maximum outside diameter of the inner adjustment ring (m, ft). If this input is zero, it will default to the valve seat diameter; in which case W7, following, must be input as zero. If this input is nonzero, the value must be greater than or equal to the valve seat diameter. If input is greater than the valve seat diameter, a nonzero input of W7, is allowed. Also refer to the warning stated for W9.

W7(R) Height of outside shoulder relative to the valve seat for inner adjustment ring (m, ft). Input of a positive, nonzero value is not allowed. Input of a zero value is required if W6 preceding is defaulted or input equal to the valve seat diameter. If the shoulder is below the seat, this distance is negative. Also refer to the warning stated for W9.

W8(R) Minimum inside diameter of the outer adjustment ring (m, ft). If this input is zero, it will default to the valve piston diameter, in which case W9 must be input as positive and nonzero. If this input is nonzero, the value must be greater than or equal to the valve piston diameter. Input of a negative W9 is allowed only if this diameter is greater than the valve piston diameter. Also refer to the warning stated for W9.

W9(R) Height of inside bottom edge relative to the valve seat for outer adjustment ring (m, ft). This may be input as positive, zero, or negative. If this input is negative, then W8 preceding must be greater than the valve piston diameter. If the bottom edge is below the valve seat, this distance is negative. WARNING: Input of this term and terms W6, W7, and W8 preceding must be done with care to ensure that the resultant gap between the adjustment rings is positive and nonzero; otherwise, an input error will result.

W10(R) Bellows average diameter (m, ft). If this term is input as zero, it will default to the valve piston diameter, resulting in a model not containing a bellows for which the valve bonnet region is vented to the atmosphere.

W11(R) Valve spring constant (N/m, lb_f/ft). Positive, nonzero input is required.

W12(R) Valve setpoint pressure (Pa, lb_f/in^2). Positive input is required.

W13(R) Valve piston, rod, spring, bellows mass (kg, lb_m). Nonzero input is required.

W14(R) Valve damping coefficient (N·s/m, lb_f·s/ft).

W15(R) Bellows inside pressure (Pa, lb_f/in^2). Defaults to standard atmospheric pressure if omitted or input as zero.

W16(R) Initial stem position. This is the fraction of total lift and is required if W1 is input as one. Total lift is input as W5.

W17(R) Initial valve piston velocity (m/s, ft/s). This must be zero or omitted if W1 is input as zero.

7.8.9 Cards CCC0400 through CCC0499, Valve CSUBV Table

The CSUBV table may be input only for motor and servo valves. If the CSUBV table is input, the smooth area change model must be specified on the valve junction geometry cards (Cards CCC0101 through CCC0109). If the smooth area change model is specified, a CSUBV table must be input.

The CSUBV table contains forward and reverse flow coefficients as a function of normalized flow area.

7.8.9.1 Cards CCC0400, Factors. This card is optional. The factors apply to the normalized flow area and the flow coefficient entries in the CSUBV table (Cards CCC0401 through CCC0499).

W1(R) Normalized flow area factor.

W2(R) Flow coefficient factor.

7.8.9.2 Cards CCC0401 through CCC0499, Table Entries. The table is entered by using three-word sets on each card. Sets may be entered one or more per card and may be split across cards. The total number of words must be a multiple of the set size. W1 is the flow area and must be normalized. The factor W1 on Card CCC0400 can be used to modify the normalized flow area entered on Cards CCC0401 through CCC0499. In either case, the implication is that if the valve is fully closed, the normalized term is zero. If the valve is fully open, the normalized term is one. Any value may be input that is between zero and one. The forward and reverse flow coefficients are W2 and W3, respectively. The code internally converts flow coefficients (CSUBV) to energy loss coefficients (K) by the formula $K = 2CA_j^2/(\rho_o CSUBV^2)$, where ρ_o is density of liquid light water at 60 ^oF (288.71 K), 14.7 lb_f/in^2 ($1.0x10^5$ Pa), C is $9.3409x10^8 \frac{\left(\frac{gal}{min}\right)^2 lb_m}{ft^7\left(\frac{lb_f}{in^2}\right)}$, and A_j is the actual valve area. The value of the density ρ_o is 62.4 lb_m/ft^3 (999.09 kg/m^3). The formula for K is shown for British units. On Card CCC0400, W2 may be used to modify the CSUBV flow coefficients entered on Cards CCC0401 through CCC0499. This can allow conversion to a different set of units. A smooth area change must be specified in W6 on Card CCC0101 to use the CSUBV table. CSUBV is entered in British units only.

W1(R) Normalized flow area.

W2(R) Forward flow coefficient (CSUBV) $\{(gal/min)/[(lb_f/in^2)^{0.5}]\}$. The CSUBV is input in British units only and is converted to SI units using 7.598055E-7 $\frac{m^3\left(\frac{lb_f}{in^2}\right)^{0.5}}{\left(\frac{gal}{min}\right)Pa^{0.5}}$ as the conversion factor.

W3(R) Reverse flow coefficient (CSUBV) $\{(gal/min)/[(lb_f/in^2)^{0.5}]\}$.

7.9 Pump Component

7.9.1 Card CCC0000, Pump Name and Type

This card is required.

W1(A) Component name. Use a name descriptive of the component's use in system. A limit of 8 characters is allowed for most computers, e.g., work stations, CRAY, and IBM computers.

W2(A) Component type. Enter PUMP to indicate a pump component or the command DELETE. The command DELETE is allowed only in RESTART problems, and the component number must be an existing component at the time of restart. The DELETE command deletes the component.

A pump consists of one volume and two junctions, one attached to each end of the volume.

For major edits, minor edits, and plot variables, the volume in the pump component is numbered as CCC010000. The pump junctions are numbered CCC010000 for the inlet junction and CCC020000 for the outlet junction.

7.9.2 Cards CCC0101 through CCC0107, Pump Volume Geometry

This card (or cards) is required for a pump component. The seven words can be entered on one or more cards, and the card numbers need not be consecutive.

W1(R) Volume flow area (m^2, ft^2).

W2(R) Length of volume (m, ft).

W3(R) Volume of volume (m^3, ft^3). The program requires that the volume equals the volume flow area times the length (W3 = W1•W2). At least two of the three quantities, W1, W2, W3, must be nonzero. If one of the quantities is zero, it will be computed from the other two. If none of the words are zero, the volume must equal the area times the length within a relative error of 0.000001.

W4(R) Azimuthal (horizontal) angle (degrees). The absolute value of this angle must be $\leq$ 360 degrees and is defined as a positional quantity. This angle is in the horizontal x-y plane. The angle 0 degrees is on the x axis, and the angle 90 degrees is on the y axis. Positive angles are rotated from the x axis toward the y axis. This quantity is not used in the calculation but is specified for automated drawing of nodalization diagrams.

W5(R) Inclination (vertical) angle (degrees). The absolute value of this angle must be $\leq$ 90 degrees. The angle 0 degrees is horizontal; positive angles have an upward direction, i.e., the outlet is at a higher elevation than the inlet. This angle is used in the interphase drag calculation and for automated drawing of nodalization diagrams. For this component, this angle is not used to decide if the horizontal or vertical flow regime map is used. Rather, the high mixing flow regime map is used.

W6(R) Elevation change (m, ft). A positive value is an increase in elevation. The absolute value of this quantity must be equal to or less than the volume length. If the inclination (vertical) angle orientation is zero, this quantity must be zero. If the inclination (vertical) angle is nonzero, this quantity must also be nonzero and have the same sign. The elevation change is used in the gravity head and in checking loop closure. See Section 2.4.1 of Volume II of the manual for further discussion. A calculated elevation angle is determined by the arcsin of the ratio of the elevation change (this word) and the volume length (Word 2). This calculated elevation angle is used in the additional stratified force term.

W7(I) Volume control flags. This word has the packed format tlpvbfe. It is not necessary to input leading zeros. Volume flags consist of scalar oriented and coordinate direction oriented flags. Only one value for a scalar oriented flag is entered per volume but up to three coordinate oriented flags can be entered for a volume, one for each coordinate direction. At present, the f flag is the only coordinate direction oriented flag. This word enters the scalar oriented flags and the x-coordinate flag. The pump component forces all volume flags except for the e digit, and y- and z-coordinate flags are not read. The effective format is 000000e.

The digit t is not used and must be input as zero (t = 0). The thermal stratification model is not used in a pump component.

The digit l is not used and must be entered as zero (l = 0). The mixture level tracking model is not used in a pump component.

The digit p is not used and must be input as zero (p = 0). The major edit output will show p = 1. The water packing scheme is not used.

The digit v is not used and must be input as zero (v = 0). The major edit output will show v = 1. The vertical stratification model is not used.

The digit b is not used and must be input as zero (b = 0). The major edit will show b = 0. The rod bundle interphase friction is not used.

The digit f that normally specifies whether wall friction is to be computed is not used and a 0 must be entered. No wall friction is computed for a pump, since it is included in the homologous pump data. The major edit output will show f = 1, which indicates that the no friction flag is set.

The digit e specifies if nonequilibrium or equilibrium is to be used; e = 0 specifies that a nonequilibrium (unequal temperature) calculation is to be used, and e = 1 specifies that an equilibrium (equal temperature) calculation is to be used. Equilibrium volumes should not be connected to nonequilibrium volumes. The equilibrium option is provided only for comparison to other codes.

7.9.3 Card CCC0108, Pump Inlet (Suction) Junction

This card is required for a pump component.

W1(I) Volume code of connecting volume on inlet side. This refers to the component from which the junction coordinate direction originates. An old or an expanded format can be used to connect volumes. In the old format (only allowed for connection from 1-D components), use CCC000000 if the connection is from the inlet side of the component and use

CCC010000 if the connection is from the outlet side of the component. In the expanded format, the connection code for 1-D components is CCCXX000F [where CCC is the component number, XX is the volume number (greater than 00 and less than 100) for 1-D pipes/annuli/pressurizers, XX is 01 for all other 1-D components, and F indicates the face number], and the connection code for 3-D components is CCCXYYZZF (where CCC is the component number, X is the first coordinate direction position number, YY is the second coordinate direction position number, ZZ is the third coordinate direction position number, and F indicates the face number). A nonzero F specifies the expanded format. The number F equal to 1 and 2 specifies the inlet and outlet faces for the first coordinate direction, which is a 1-D volume's coordinate direction (see Section 2.1 of Volume II of this manual). The number F equal to 3 through 6 specifies crossflow for 1-D volumes. The number F equal to 3 and 4 would specify inlet and outlet faces for the second coordinate direction; F equal to 5 and 6 would do the same for the third coordinate direction. For connecting from a time-dependent volume using the old format, both CCC000000 and CCC010000 are allowed. For connecting from a time-dependent volume using the expanded format, only the number F equal to 1 or 2 is allowed. Section 4.4 in this Appendix discusses this further.

W2(R) Junction flow area (m^2, ft^2). If zero, the junction flow area is set to the minimum of the volume flow area of adjoining volumes. For abrupt area changes, the junction flow area must be equal to or smaller than the minimum of the adjoining volume flow areas. For smooth area changes, there are no restrictions.

W3(R) Reynolds number independent forward flow energy loss coefficient, A_F. This quantity will be used in each of the phasic momentum equations when the junction velocity of that phase is positive or zero. A variable loss coefficient may be specified (see Section 7.9.7 of this Appendix). The interpretation and use of the coefficient depends on whether the smooth or abrupt area change option is specified or grid spacers are modeled (see Section 2.4.1 of Volume II of this manual). This quantity must be greater than or equal to zero. See Section 5.6 of Volume V for more information.

W4(R) Reynolds number independent reverse flow energy loss coefficient, A_R. This quantity will be used in each of the phasic momentum equations when the junction velocity of that phase is negative. A variable loss coefficient may be specified (see Section 7.9.7 of this Appendix). The interpretation and use of the coefficient depends on whether the smooth or abrupt area change option is specified or grid spacers are modeled (see Section 2.4.1 of Volume II of this manual). This quantity must be greater than or equal to zero. See Section 5.6 of Volume V for more information.

W5(I) Junction control flags. This word has the packed format jefvcahs. It is not necessary to input leading zeros.

The digit j is not used and should be input as zero (j = 1). The jet junction model is not used.

The digit e is not used and should be input as zero (e = 0).

The digit f specifies CCFL options; f = 0 specifies that the CCFL model will not be applied, and f = 1 specifies that the CCFL model will be applied.

The digit v is not used and should be input as zero (v = 0). The stratification entrainment/pullthrough model is not used.

The digit c specifies choking options; c = 0 specifies that the standard choking model will be applied, c = 1 specifies that neither choking model will be applied, and c = 2 specifies that the modified Henry-Fauske choking model will be applied.

The digit a specifies area change options (see Volume II, Section 2.4.1 and Volume V, Section 4.6.3); a = 0 specifies either a smooth area change or no area change, a = 1 specifies the full abrupt area change model (code-calculated K_{loss}, area apportioning at a branch, restricted junction area, and extra interphase drag), and a = 2 specifies the partial abrupt area change model (no code-calculated K_{loss}, but includes area apportioning at a branch, restricted junction area, and extra interphase drag).

The digit h specifies nonhomogeneous or homogeneous; h = 0 specifies the nonhomogeneous (two-velocity momentum equations) option, and h = 1 or 2 specifies the homogeneous (single-velocity momentum equation) option. For the homogeneous option (h = 1 or 2), the major edit printout will show a one.

The digit s is not used and should be input as zero (s = 0).

7.9.4 Card CCC0109, Pump Outlet (Discharge) Junction

This card is required for a pump component. The format for this card is identical to Card CCC0108 except data are for the outlet junction; use to instead of from.

7.9.5 Card CCC0110, Pump Inlet (Suction) Junction Diameter and CCFL Data

This card is optional. The defaults indicated for each word are used if the card is not entered. If this card is being used to specify only the junction hydraulic diameter for the interphase drag calculation (i.e., f = 0 in Word 5 of Card CCC0108), then the diameter should be entered in Word 1 and any allowable values should be entered in Words 2 through 4 (will not be used). If the card is being used for the CCFL model (i.e., f = 1 in Word 5 of Card CCC0108), then enter all four words for the appropriate CCFL model if values different from the default values are desired.

W1(R) Junction hydraulic diameter, D_j (m, ft). This is the junction hydraulic diameter used in the CCFL correlation equation, interphase drag, and form loss Reynolds number. This number must be $\geq$ 0. This number should be computed from $4.0 \bullet \left(\frac{\text{junction area}}{\text{wetted perimeter}}\right)$. If a zero is entered or the default is used, the junction diameter is computed from $2.0 \bullet \left(\frac{\text{junction area}}{\pi}\right)^{0.5}$. See Word 2 of Card CCC0108 for the junction area.

W2(R) Flooding correlation form, β. If zero, the Wallis CCFL form is used. If one, the Kutateladze CCFL form is used. If between zero and one, Bankoff weighting between the Wallis and Kutateladze CCFL forms is used. This number must be $\geq$ 0 and $\leq$ 1. The default value is 0 (Wallis form). See Section 3 of Volume I for details of the model.

W3(R) Vapor/gas intercept, c. This is the vapor/gas intercept used in the CCFL correlation (when $H_f^{1/2} = 0$) and must be > 0. The default value is 1.

W4(R) Slope, m. This is the slope used in the CCFL correlation and must be > 0. The default value is 1.

7.9.6 Card CCC0111, Pump Outlet (Discharge) Junction Diameter and CCFL Data

This card is optional. The defaults indicated for each word are used if the card is not entered. If this card is being used to just specify the junction hydraulic diameter for the interphase drag calculation (i.e., f = 0 in Word 5 of Card CCC0109), then the diameter should be entered in Word 1 and any allowable values should be entered in Words 2 through 4 (will not be used). If the card is being used for the CCFL model (i.e., f = 1 in Word 5 of Card CCC0109), then enter all four words for the appropriate CCFL model if values different from the default values are desired. The format for this card is identical to Card CCC0110 except that data are for the outlet junction.

7.9.7 Card CCC0112, Pump Inlet (Suction) Junction Form Loss Data

This card is optional. The user-specified form loss coefficients are given in Words 3 and 4 of Card CCC0108 if this card is not entered. If this card is entered, the form loss coefficients depend on the flow conditions and are calculated from

$$K_F = A_F + B_F Re^{-C_F}$$

$$K_R = A_R + B_R Re^{-C_R}$$

where K_F and K_R are the forward and reverse form loss coefficients; A_F, A_R, B_F, B_R, C_F, and C_R are user-specified constants. A_F and A_R are Words 3 and 4 of Card CCC0108; B_F, B_R, C_F, and C_R are Words 1,

2, 3, and 4 of this card (CCC0112); and Re is the junction Reynolds number based on mixture fluid properties. If this card is being used for the form loss calculations, then enter all four words for the appropriate expression.

W1(R) B_F (≥ 0). This quantity must be greater than or equal to zero.

W2(R) C_F (≥ 0). This quantity must be greater than or equal to zero.

W3(R) B_R (≥ 0). This quantity must be greater than or equal to zero.

W4(R) C_R (≥ 0). This quantity must be greater than or equal to zero.

7.9.8 Card CCC0113, Pump Outlet (Discharge) Junction Form Loss Data

This card is optional. The user-specified form loss coefficients are given in Words 3 and 4 of Cards CCC0109 if this card is not entered. If this card is entered, the form loss coefficients depend on the flow conditions and are calculated from

$$K_F = A_F + B_F Re^{-C_F}$$

$$K_R = A_R + B_R Re^{-C_R}$$

where K_F and K_R are the forward and reverse form loss coefficients; A_F, A_R, B_F, B_R, C_F, and C_R are user-specified constants. A_F and A_R are Words 3 and 4 of Card CCC0109; B_F, B_R, C_F, and C_R are Words 1, 2, 3, and 4 on this card (CCC0113); and Re is the junction Reynolds number based on mixture fluid properties. If these cards are being used for the form loss calculations, then enter all four words for the appropriate expression. The format for this card is identical to Card CCC0112 except data are for the outlet junction.

7.9.9 Card CCC0200, Pump Volume Initial Conditions

This card is required for a pump component.

W1(I) Control word. This word has the packed format $\underline{\varepsilon}\underline{bt}$. It is not necessary to input leading zeros.

The digit $\underline{\varepsilon}$ specifies the fluid, where $\underline{\varepsilon} = 0$ is the default fluid. The value for $\underline{\varepsilon} > 0$ corresponds to the position number of the fluid type indicated on the 120 - 129 cards (i.e., $\underline{\varepsilon} = 1$ specifies H_2O, $\underline{\varepsilon} = 2$ specifies D_2O, etc.). The default fluid is that set for the hydrodynamic system by Cards 120 through 129 or this control word in another volume in this hydrodynamic system. The fluid type set on Cards 120 through 129 or these control

words must be consistent (i.e., not specify different fluids). If Cards 120 through 129 are not entered and all control words use the default $\underline{\varepsilon}$ = 0, then H_2O is assumed to be the fluid.

The digit $\underline{b}$ specifies whether boron is present or not. Entering $\underline{b}$ = 0 specifies that the volume liquid does not contain boron; $\underline{b}$ = 1 specifies that a boron concentration in mass of boron per mass of liquid (which may be zero) is being entered after the other required thermodynamic information.

The digit $\underline{t}$ specifies how the following words are to be used to determine the initial thermodynamic state. Entering $\underline{t}$ equal to 0 through 3 specifies one component (vapor/liquid). Entering $\underline{t}$ equal to 4, 5, 6, or 8 allows the specification of two components (vapor/liquid and noncondensable gas).

With options $\underline{t}$ equal to 4, 5, 6, or 8, the names of the components of the noncondensable gas must be entered on Card 110, and the mass fractions of the components of the noncondensable gas are entered on Card 115 (if more than 1 noncondensable component is specified on Card 110). Card CCC0300 may be used for the mass fractions of the components of the noncondensable gas.

If $\underline{t}$ = 0, the next four words are interpreted as pressure (Pa, lb_f/in^2), liquid specific internal energy (J/kg, Btu/lb_m), vapor/gas specific internal energy (J/kg, Btu/lb_m), and vapor/gas void fraction. These quantities will be interpreted as nonequilibrium or equilibrium conditions depending on the specific internal energies used to define the thermodynamic state. Enter only the minimum number of words required. If entered, boron concentration (mass of boron per mass of liquid) follows the last required word for thermodynamic conditions.

If $\underline{t}$ = 1, the next two words are interpreted as temperature (K, ^oF) and static quality in equilibrium condition. Enter only the minimum number of words required. If entered, boron concentration (mass of boron per mass of liquid) follows the last required word for thermodynamic conditions.

If $\underline{t}$ = 2, the next two words are interpreted as pressure (Pa, lb_f/in^2) and static quality in equilibrium condition. Enter only the minimum number of words required. If entered, boron concentration (mass of boron per mass of liquid) follows the last required word for thermodynamic conditions.

If $\underline{t}$ = 3, the next two words are interpreted as pressure (Pa, lb_f/in^2) and temperature (K, ^oF) in nonequilibrium or equilibrium conditions depending on the pressure and temperature used to define the thermodynamic state. Enter only the minimum number of words

required. If entered, boron concentration (mass of boron per mass of liquid) follows the last required word for thermodynamic conditions.

The following options are used for input of noncondensable states. In all cases, the criteria used for determining the range of values for static quality are;

1. 1.0E-9 $\leq$ static quality $\leq$ 0.99999999, two phase conditions

2. static quality < 1.0E-9 or static quality > 0.99999999, single-phase conditions.

The static quality is given by $M_g/(M_g + M_f)$, where $M_g = M_s + M_n$. Section 3.2 of Volume I of the manual discusses this further.

Noncondensable options are as follows:

If t = 4, the next three words are interpreted as pressure (Pa, $lb_f/in.^2$), temperature (K, ^oF), and static quality in equilibrium condition. Using this input option with static quality > 0.0 and $\leq$ 1.0, saturated noncondensables (100% relative humidity) will result. The temperature is restricted to be less than the saturation temperature at the input pressure and less than the critical temperature; otherwise an input error will occur. Setting static quality to 0.0 is used as a flag that will initialize the volume to all noncondensables (dry noncondensable, 0% relative humidity) with no temperature restrictions. Static quality is reset to 1.0 using this dry noncondensable option. Enter only the minimum number of words required. If entered, boron concentration (mass of boron per mass of liquid) follows the last required word for thermodynamic conditions.

If t = 5, the next three words are interpreted as temperature (K, ^oF), static quality, and noncondensable quality in equilibrium condition. Both the static and noncondensable qualities are restricted to be between 1.0E-9 and 0.99999999. Little experience has been obtained using this option, and it has not been checked out. Enter only the minimum number of words required. If entered, boron concentration (mass of boron per mass of liquid) follows the last required word for thermodynamic conditions.

If t = 6, the next five words are interpreted as pressure (Pa, $lb_f/in.^2$), liquid specific internal energy (J/kg, Btu/lb_m), vapor/gas specific internal energy (J/kg, Btu/lb_m), vapor/gas void fraction, and noncondensable quality. These quantities will be interpreted as nonequilibrium or equilibrium conditions depending on the specific internal energies used to define the thermodynamic state. This option can be used to set the relative humidity to less than or equal to 100%. The combinations of vapor/gas void fraction and noncondensable quality must be thermodynamically consistent. If the noncondensable quality is set to 0.0, noncondensables are not present and the input processing branches to that type of processing (t = 0). For this situation, Card 110 must be entered, and Card 115

must be entered if more than 1 noncondensable component is specified on Card 110. If noncondensables are present (noncondensable quality greater than 0.0), then the vapor/gas void fraction must also be greater than 0.0. If the noncondensable quality is set to 1.0 (pure noncondensable, 0% relative humidity), then the vapor/gas void fraction must also be 1.0. When both the vapor/gas void fraction and the noncondensable quality are set to 1.0, the volume temperature is calculated from the noncondensable energy equation using the input vapor/gas specific internal energy. Enter only the minimum number of words required. If entered, boron concentration (mass of boron per mass of liquid) follows the last required word for thermodynamic conditions.

If t = 8, the next five words are interpreted as pressure (Pa, lb_f/in^2), liquid temperature (K, ^oF), vapor/gas temperature (K, ^oF), vapor/gas void fraction, and noncondensable quality. These quantities will be interpreted as nonequilibrium or equilibrium conditions depending on the temperatures used to define the thermodynamic state. This option can be used to set the relative humidity to less than or equal to 100%. The combinations of vapor/gas void fraction and noncondensable quality must be thermodynamically consistent. If the noncondensable quality is set to 0.0, noncondensables are not present and the input processing branches to that type of processing. For this situation, Card 110 must be entered, and Card 115 must be entered if more than 1 noncondensable component is specified on Card 110. If noncondensables are present (noncondensable quality greater than 0.0), then the vapor/gas void fraction must also be greater than 0.0. If the noncondensable quality is set to 1.0 (pure noncondensable, 0% relative humidity), then the vapor/gas void fraction must also be 1.0. When both the vapor/gas void fraction and the noncondensable quality are set to 1.0, the volume specific internal energy is calculated from the noncondensable energy equation using the input vapor/gas temperature. Enter only the minimum number of words required. If entered, boron concentration (mass of boron per mass of liquid) follows the last required word for thermodynamic conditions.

W2-W7(R) Quantities as described under Word 1. Depending on the control word, two through five thermodynamic quantities may be required. Enter only the minimum number required. If entered, boron concentration (mass of boron per mass of liquid) follows the last required word for thermodynamic conditions.

7.9.10 Card CCC0201, Pump Inlet (Suction) Junction Initial Conditions

This card is required for a pump component.

W1(I) Control word. If zero, the next two words are velocities; if one, the next two words are mass flow rates.

W2(R) Initial liquid velocity or initial liquid mass flow rate. This quantity is either velocity (m/s, ft/s) or mass flow rate (kg/s, lb_m/s), depending on the control word.

W3(R) Initial vapor/gas velocity or initial vapor/gas mass flow rate. This quantity is either velocity (m/s, ft/s) or mass flow rate (kg/s, lb_m/s), depending on the control word.

W4(R) Initial interface velocity (m/s, ft/s). Enter zero.

7.9.11 Card CCC0202, Pump Outlet (Discharge) Junction Initial Conditions

This card is similar to Card CCC0201 except that data are for the outlet junction.

7.9.12 Card CCC0300, Pump Volume Noncondensable Mass Fractions

This card is optional. If omitted, the noncondensable mass fractions are obtained from the noncondensable mass fractions entered on Card 115.

W1-WN(R) Mass fractions of the noncondensable species entered on Card 110. The number of words on this card should be the same as on Card 110. The noncondensable mass fractions must sum to 1.0 within a relative error of 1.0×10^{-10}.

7.9.13 Card CCC0301, Pump Indicator and Option

This card is required for a pump component. The card format is one of two types: (1) the original RELAP5-3D format of seven words per set, or (2) an extended nine words per set when the option to enter two-phase pump degradation multipliers as a function of void fraction and pressure is used.

Seven word format (two-phase pump degradation multipliers not entered, or entered as functions of void fraction only).

W1(I) Single-phase table indicator. If zero, the single-phase tables ($H_{1\phi}$ and $\tau_{1\phi}$) are entered with this component. If a positive number, the single-phase tables are to be obtained from the pump component with this number. If -1, the built-in single-phase tables for the Bingham pump are used. If -2, the built-in single-phase tables for the Westinghouse pump are used.

W2(I) Two-phase indicator. If -1, the two-phase option is not to be used. If zero, the two-phase option is used and two-phase multiplier tables (M_H and M_τ) are entered with this component. If a positive number, the two-phase option is used and the two-phase multiplier tables are to be obtained from the pump component with this number. There are no built-in tables for the two-phase multiplier tables.

W3(I) Two-phase difference table indicator. If -3, the two-phase difference tables ($H_{2\phi}$ - $H_{1\phi}$ and $\tau_{2\phi}$ - $\tau_{1\phi}$) are not needed (i.e., if W2 is -1). If zero, the two-phase difference tables are entered with this component. If a positive number, the two-phase difference tables are to be obtained from the pump component with this number. If -1, the built-in two-phase

difference tables for the Bingham pump are used. If -2, the built-in two-phase difference tables for the Westinghouse pump are used.

W4(I) Pump motor torque table indicator. If -1, no pump motor torque table is used. If zero, a motor torque table is entered for this pump component. If positive nonzero, use the motor torque table from the pump component with this number.

W5(I) Time-dependent pump rotational velocity table indicator. If -1, no time-dependent pump rotational velocity table is used and the pump rotational velocity is always determined by the torque-inertia equation. If zero, a rotational velocity table is entered with this component. If positive nonzero, the rotational velocity table from the pump component with this number is used. A pump rotational velocity table cannot be used when the pump is connected to a shaft control component.

W6(I) Pump motor trip number. When the pump motor trip is off, electrical power is supplied to the pump motor; when the pump motor trip is on, electrical power is disconnected from the pump motor. If the pump rotational velocity table is being used during a time step (i.e., a pump rotational velocity table has be entered in the input deck, and the pump rotational velocity table trip number is zero or the pump rotational velocity table trip number is nonzero and the pump rotational velocity table trip is on), the pump rotational velocity is computed from the pump rotational velocity table. If the pump rotational velocity table is not being used during a time step (i.e., a pump rotational velocity table has not been entered in the input deck or a pump rotational velocity table has been entered in the input deck, the pump rotational velocity table trip number is not zero, and the pump rotational velocity table trip is off), the pump rotational velocity depends on the pump motor torque data and this trip. If the motor trip is off and no pump motor torque data are present, the pump rotational velocity is the same as for the previous time step. This will be the initial pump rotational velocity if the pump trip has never been set. Usually the pump motor trip is a latched trip, but that is not necessary. If the motor trip is off and a pump motor torque table is present, the pump rotational velocity is given by the torque-inertia equation where the net torque is given by the pump motor torque data, the homologous hydraulic torque data, and the frictional torque data. If the pump motor trip is on, the torque-inertia equation is used and the pump motor torque is set to zero. If the pump motor trip number is zero, no motor trip is tested and the pump motor trip is assumed to be off.

W7(I) Reverse indicator. If zero, no reverse is allowed; if one, reverse is allowed.

Nine word format (two-phase pump degradation multipliers entered as a function of void fraction and pressure). The first seven words of this format are identical to the seven words of the seven-word format. The last two words (W8 and W9) are required only if W2 is equal to 0, and head and/or torque multipliers are desired to be entered as functions of void fraction and pressure. When referring to another pump component's two-phase multiplier tables, mixed type multipliers may not be used (e.g., head

multipliers entered as a function of void fraction and pressure with torque multipliers entered as a function of void fraction only). In this case, the multipliers must be explicitly entered for each pump.

W8(I) Two-phase pump degradation multiplier indicator for head. If -1, the two-phase option with head multipliers as a function of void fraction and pressure is not to be used (must be selected if W2 is -1 or nonzero). If zero, the two-phase option with head multipliers as a function of void fraction and pressure is used and two-phase head multiplier tables are entered as functions of void fraction and pressure with this component (if selected, W2 must be equal to 0). If a positive nonzero number, the two-phase option with head multipliers as a function of void fraction and pressure is used and the two-phase head multiplier table data are to be obtained from the pump component with this number (if selected, W2 must be equal to 0; also, W2, W8 and W9 of Card CCC0301 must all be equal to 0 for the referral pump). There are no built-in tables for the two-phase head multiplier tables as a function of void fraction and pressure.

W9(I) Two-phase pump degradation multiplier indicator for torque. Identical to W8 except for two-phase torque multipliers as a function of void fraction and pressure.

7.9.14 Cards CCC0302 through CCC0304, Pump Description

This card (or cards) is required for a pump component. Words 1-12 must be entered. Words 13-17 are optional. Words 1, 9, 10, 11, 12, 13, 14, 15, 16, and 17 are used for the pump frictional torque (τ_{fr}), which is modeled as a constant or a four-term function of the pump rotational velocity and is given by

$$\tau_{fr} = \pm\tau_{frn} \qquad \text{for } \left|\frac{\omega}{\omega_R}\right| < S_{PF}$$

and

$$\tau_{fr} = \pm\left(\tau_{fr0} + \tau_{fr1}\left|\frac{\omega}{\omega_R}\right|^{x1} + \tau_{fr2}\left|\frac{\omega}{\omega_R}\right|^{x2} + \tau_{fr3}\left|\frac{\omega}{\omega_R}\right|^{x3}\right) \qquad \text{for } \left|\frac{\omega}{\omega_R}\right| \geq S_{PF}$$

where ω is the pump rotational velocity; ω_R is the input rated pump rotational velocity; and τ_{frn}, τ_{fr0}, τ_{fr1}, τ_{fr2}, τ_{fr3}, x1, x2, x3, and S_{PF} (pump friction critical speed ratio) are input data. The pump frictional torque is negative if $\frac{\omega}{\omega_R} > 0$, and it is positive if $\frac{\omega}{\omega_R} < 0$.

W1(R) Rated pump rotational velocity, ω_R (rad/s, rev/min).

W2(R) Ratio of initial pump rotational velocity to rated pump rotational velocity. Used for calculating initial pump rotational velocity.

W3(R) Rated pump flow, Q_R (m^3/s, gal/min).

W4(R) Rated pump head, H_R (m, ft).

W5(R) Rated pump torque, τ_R (N·m, lb_f·ft).

W6(R) Moment of inertia, I_{pn} (kg·m^2, lb_m·ft^2). This includes all direct coupled rotating components, including the motor for a motor driven pump.

W7(R) Rated density, ρ_R (kg/m^3, lb_m/ft^3). If zero, initial density is used. This is the density used to generate homologous data.

W8(R) Rated pump motor torque (N·m, lb_f·ft). If this word is zero, the rated pump motor torque is computed from the initial pump rotational velocity and the pump torque that is computed from the initial pump rotational velocity, initial volume conditions, and the homologous curves. This quantity must be nonzero if the relative pump motor torque table is entered.

W9(R) Second frictional torque coefficient, τ_{fr2} (N·m, lb_f·ft). This parameter multiplies the absolute value of the speed ratio (pump speed/rated pump speed) to the x2 power. The frictional torque factors are summed together.

W10(R) Constant frictional torque coefficient, τ_{fr0} (N·m, lb_f·ft). This is constant frictional torque.

W11(R) First frictional torque coefficient, τ_{fr1} (N·m, lb_f·ft). This multiplies the absolute value of the speed ratio to the x1 power.

W12(R) Third frictional torque coefficient, τ_{fr3} (N·m, lb_f·ft). This multiplies the absolute value of the speed ratio to the x3 power.

W13(R) First exponent, x1. This is used on the speed ratio used with frictional torque coefficient τ_{fr1}. If zero or not entered, a default value of 1.0 is used.

W14(R) Second exponent, x2. This is used on the speed ratio used with frictional torque coefficient τ_{fr2}. If zero or not entered, a default value of 2.0 is used.

W15(R) Third exponent, x3. This is used on the speed ratio used with frictional torque coefficient τ_{fr3}. If zero or not entered, a default value of 3.0 is used.

W16(R) Pump friction torque, τ_{frn}, to be used below the pump friction critical speed ratio (N·m, lb_f·ft). If not entered, a default value of τ_{fr0} is used.

W17(R) Pump friction critical speed ratio, S_{PF}. When the absolute value of the pump speed ratio is greater than or equal to S_{PF}, the four-term expression for frictional torque is used. When the absolute value of the pump speed ratio is less than S_{PF}, the frictional torque (τ_{frn}) from Word 16 is used. If not entered, a default value of 0.0 is used.

7.9.15 Card CCC0308, Pump Variable Inertia

Pump inertia is given by Word 6 of Cards CCC0302-CCC0304 if this card is not entered. If this card is entered, the pump inertia is computed from

$$I = I_{pn} \qquad \text{for } \left|\frac{\omega}{\omega_R}\right| < S_{PI}$$

and

$$I = I_{p0} + I_{p1}\left|\frac{\omega}{\omega_R}\right| + I_{p2}\left|\frac{\omega}{\omega_R}\right|^2 + I_{p3}\left|\frac{\omega}{\omega_R}\right|^3 \qquad \text{for } \left|\frac{\omega}{\omega_R}\right| \geq S_{PI}$$

where ω is the pump rotational velocity, ω_R is the input rated pump rotational velocity from Word 1 of Cards CCC0302-CCC0304, and I_{pn} is from Word 6 of Cards CCC0302-CCC0304. If this card in entered, all five words must be input.

W1(R) Pump inertial critical speed ratio, S_{PI}. When the absolute value of the pump speed ratio is greater than or equal to S_{PI}, the cubic expression for inertia is used. When the absolute value of the pump speed ratio is less than S_{PI}, the inertia (I_{pn}) from Word 6 of Cards CCC0302-CCC0304 is used.

W2(R) Cubic inertia coefficient, I_{p3} (kg·m^2, lb_m·ft^2).

W3(R) Quadratic inertia coefficient, I_{p2} (kg·m^2, lb_m·ft^2).

W4(R) Linear inertia coefficient, I_{p1} (kg·m^2, lb_m·ft^2).

W5(R) Constant inertia coefficient, I_{p0} (kg·m^2, lb_m·ft^2).

7.9.16 Card CCC0309, Pump-Shaft Connection

If this card is entered, the pump is connected to a SHAFT component. The pump may still be driven by a pump motor that can be described in this component, by a turbine also connected to the SHAFT component, or from torque computed by the control system and applied to the SHAFT component. The pump speed table may not be entered if this card is entered.

W1(I) Control component number of the shaft component.

W2(I) Pump-shaft disconnect trip. If this quantity is omitted or zero, the pump is always connected to the SHAFT. If nonzero, the pump is connected to the shaft when the trip is false and disconnected when the trip is true.

7.9.17 Card CCC0310, Pump Stop Data

If this card is omitted, the pump will not be stopped by the program.

W1(R) Elapsed problem time for pump stop (s).

W2(R) Maximum forward velocity for pump stop (rad/s, rev/min).

W3(R) Maximum reverse velocity for pump stop (rad/s, rev/min). Reverse velocity is a negative number.

7.9.18 Cards CCCXX00 through CCCXX99, Pump Single-Phase Homologous Curves

These cards are required only if W1 of Card CCC0301 is zero. There are sixteen possible sets of homologous curve data to completely describe the single-phase pump operation, that is, a curve for each head and torque for each of the eight possible curve types or regimes of operation. Entering all sixteen curves is not necessary, but an error will occur from an attempt to reference one that has not been entered.

Card numbering is CCC1100 through CCC1199 for the first curve, CCC1200 through CCC1299 for the second curve, up to CCC2600 through CCC2699 for the sixteenth curve. Data for each individual curve are input on up to 100 cards, which need not be numbered consecutively.

W1(I) Curve type. Enter 1 for a head curve; enter 2 for a torque curve.

W2(I) Curve regime. See **Table 2.4-2** of this manual for definitions. The possible integer numbers and the corresponding homologous curve octants are: 1 (HAN or BAN), 2 (HVN or BVN), 3 (HAD or BAD), 4 (HVD or BVD), 5 (HAT or BAT), 6 (HVT or BVT), 7 (HAR or BAR), and 8 (HVR or BVR).

W3(R) Independent variable. Values for each curve range from -1.0 to 0.0 or from 0.0 to 1.0 inclusive. The variable is v/a for W2(I) = 1, 3, 5, or 7 and a/v for W2(I) = 2, 4, 6, or 8. If

the tabular data does not span the entire range of the independent variable, end point values are used for data outside the table. This usually leads to incorrect pump performance data. Thus, entering data to cover the complete range is recommended.

W4(R) Dependent variable. The variable is h/a^2 or b/a^2 for W2(I) = 1, 3, 5, or 7 and h/v^2 or b/v^2 for W2(I) = 2, 4, 6, or 8.

Additional pairs of words corresponding to Words 3 and 4 as needed are entered on this or following cards, up to a limit of 100 pairs. Independent variable values must be in increasing order.

7.9.19 Cards CCCXX00 through CCCXX99, Pump Two-Phase Multiplier Tables

These cards are required only if W2 of Card CCC0301 is zero; XX is 30 and 31 for the pump head multiplier table and the pump torque multiplier table, respectively. These cards have two formats: (1) pump head or torque multipliers entered as a function of void fraction only, and (2) pump head or torque multipliers entered as a function of void fraction and pressure.

Pump two-phase multipliers entered as functions of void fraction only.

W1(I) Extrapolation indicator. This is not used, enter zero.

W2(R) Void fraction.

W3(R) Head or torque difference multiplier depending on table type.

Additional pairs of data corresponding to Words 2 and 3 as needed are entered on this or additional cards, up to a limit of 100 pairs. Void fractions must be in increasing order.

Pump two-phase multipliers entered as functions of void fraction and pressure.

W1(I) Extrapolation indicator. This is not used, enter zero.

W2(I) Number of pressure values to be entered, n_p.

W3(I) Number of void fraction values to be entered, n_{vf}.

W4-W[4+(n_p-1)](R) Pressure values, entered in ascending order (Pa, lb_f/in^2).

W[4+n_p]-W[4+n_p+(n_{vf}-1)](R) Void fraction values, entered in ascending order.

W[4+n_p+n_{vf}]-W[4+n_p+n_{vf}+($n_p n_{vf}$-1)](R) Head or torque difference multipliers, depending on table type, entered as follows, where x is the total number of void fraction values and y is the total number of pressure values:

$M_{vf1,p1}, M_{vf2,p1}, ..., M_{vfx,p1}, M_{vf1,p2}, M_{vf2,p2}, ..., M_{vfx,p2}, ..., M_{vf1,py}, M_{vf2,py}, ..., M_{vfx,py}$.

7.9.20 Cards CCCXX00 through CCCXX99, Pump Two-Phase Difference Tables

These cards are required only if W3 of Card CCC0301 is zero. The two-phase difference tables are homologous curves entered in a similar manner to the single-phase homologous data.

Card numbering is CCC4100 through CCC4199 for the first curve, CCC4200 through CCC4299 for the second curve, up to CCC5600 through CCC5699 for the sixteenth curve. Data for each individual curve are input on up to 100 cards, which need not be numbered consecutively. Data are the same as the data for the single-phase data except that the dependent variable is the difference between single-phase and fully degraded two-phase data.

7.9.21 Cards CCC6001 through CCC6099, Pump Relative Motor Torque Data

These cards are required only if W4 of Card CCC0301 is zero. If the pump velocity table is not being used during a time step and these cards are present, the torque-inertia equation is used. When the electrical power is supplied to the pump motor (the pump trip is off), the net torque is computed from the rated pump motor torque times the pump relative motor torque from this table and the torque from the homologous data. If the electrical power is disconnected from the pump (the pump motor trip is on), the pump motor torque is zero.

W1(R) Pump rotational velocity (rad/s, rev/min).

W2(R) Pump relative motor torque.

Additional pairs as needed are added on this or additional cards, up to a limit of 100 pairs. Pump velocities must be in increasing order.

7.9.22 Card CCC6100, Pump Time-Dependent Rotational Velocity Control

This card is required only if W5 of Card CCC0301 is zero. The pump rotational velocity table (Cards CCC6101-CCC6199), if present, has priority in setting the pump rotational velocity over the pump motor trip, the pump motor torque data, and the torque-inertia equation.

W1(I) Rotational velocity table trip number. This quantity is required. If the trip number is zero, the pump rotational velocity is computed from this table, and the search variable is the advancement time. If the trip number is nonzero, the state of the trip determines when the table is to be used. If the trip is off, the pump rotational velocity is set from the pump motor trip (Word 6 on Card CCC0301), the pump motor torque data, and the torque-inertia equation as if this table had not been entered. If the rotational velocity table trip is on, the pump rotational velocity is computed from this table. If the rotational velocity table trip is on and Words 2 and 3 are not entered on this card, the search variable in the rotational

velocity table is time, and the value of the search variable is the advancement time minus the rotational velocity table trip activation time. If this word is used, it takes precedence over the pump motor trip number used in Word 6 of the CCC0301 card.

W2(A) Alphanumeric part of variable request code. This quantity is optional. If not present, time is the search argument. If present, this word and the next are a variable request code that specifies the search argument for the table lookup and interpolation. TIME can be selected, but the trip time is not subtracted from the advancement time.

W3(I) Numeric part of variable request code. This is assumed to be zero if missing.

7.9.23 Cards CCC6101 through CCC6199, Pump Time-Dependent Rotational Velocity Data

These cards are required only if W5 of Card CCC0301 is zero.

W1(R) Search variable. Units depend on the quantity selected for the search variable.

W2(R) Pump rotational velocity (rad/s, rev/min).

Additional pairs as needed are added on this or additional cards, up to a limit of 100 pairs. Search variable values must be in increasing order.

7.10 Compressor Component

7.10.1 Card CCC0000, Compressor Name and Type

This card is required.

W1(A) Component name. Use a name descriptive of the component's use in system. A limit of 8 characters is allowed for most computers, e.g., work stations, CRAY, and IBM computers.

W2(A) Component type. Enter CPRSSR to indicate a compressor component or the command DELETE. The command DELETE is allowed only in RESTART problems, and the component number must be an existing component at the time of restart. The DELETE command deletes the component.

A compressor consists of one volume and at least one junction, attached to the inlet end of the volume. Optionally, a junction can be attached to the outlet end of the volume.

For major edits, minor edits, and plot variables, the volume in the compressor component is numbered as CCC010000. The compressor junctions are numbered CCC010000 for the inlet junction and CCC020000 for the outlet junction, if it is supplied with the component.

7.10.2 Card CCC0001, Compressor Information

This card is required for a compressor component.

W1(I) Number of junctions, nj. The variable nj is the number of junctions described in the input data for this component and must be either 1 or 2. If nj = 1, then a junction is specified only at the compressor inlet. If nj = 2, then junctions are specified with the compressor component at both the inlet and the outlet. The outlet junction, if not specified with this component, can be either the inlet junction of another compressor component or a non-compressor junction.

7.10.3 Cards CCC0101 through CCC0107, Compressor Volume Geometry

This card (or cards) is required for a compressor component. The seven words can be entered on one or more cards, and the card numbers need not be consecutive.

W1(R) Volume flow area (m^2, ft^2).

W2(R) Length of volume (m, ft).

W3(R) Volume of volume (m^3, ft^3). The program requires that the volume equals the volume flow area times the length (W3 = W1•W2). At least two of the three quantities, W1, W2, W3, must be nonzero. If one of the quantities is zero, it will be computed from the other two. If none of the words are zero, the volume must equal the area times the length within a relative error of 0.000001.

W4(R) Azimuthal (horizontal) angle (degrees). The absolute value of this angle must be < 360 degrees and is defined as a positional quantity. This angle is in the horizontal x-y plane. The angle 0 degrees is on the x axis, and the angle 90 degrees is on the y axis. Positive angles are rotated from the x axis toward the y axis. This quantity is not used in the calculation but is specified for automated drawing of nodalization diagrams.

W5(R) Inclination (vertical) angle (degrees). The absolute value of this angle must be < 90 degrees. The angle 0 degrees is horizontal; positive angles have an upward direction, i.e., the outlet is at a higher elevation than the inlet. This angle is used in the interphase drag calculation and for automated drawing of nodalization diagrams. For this component, this angle is not used to decide if the horizontal or vertical flow regime is used. Rather, the high mixing flow regime map is used.

W6(R) Elevation change (m, ft). A positive value is an increase in elevation. The absolute value of this quantity must be equal to or less than the volume length. If the inclination (vertical) angle orientation is zero, this quantity must be zero. If the inclination (vertical) angle is nonzero, this quantity must also be nonzero and have the same sign. The elevation change

is used in the gravity head and in checking loop closure. See Section of Volume II of the manual for further discussion. A calculated elevation angle is determined by the arcsin of the ratio of the elevation change (this word) and the volume length (Word 2). This calculated elevation angle is used in the additional stratified force term. If W8 is 1 (default) or 2, this word is the position change in the fixed z direction as flow passes from the x inlet face to the x outlet face.

W7(I) Volume control flags. This word has the packed format tlpvbfe. It is not necessary to input leading zeros. Volume flags consist of scalar oriented and coordinate direction oriented flags. Only one value for a scalar oriented flag is entered per volume but up to three coordinate oriented flags can be entered for a volume, one for each coordinate direction. At present, the f flag is the only coordinate direction oriented flag. This word enters the scalar oriented flags and the x-coordinate flag. The compressor component forces all volume flags except for the e digit, and y- and z-coordinate flags are not read. The effective format is 000000e.

The digit t is not used and must be input as zero (t = 0). The thermal stratification model is not used in a compressor component.

The digit l is not used and must be entered as zero (l = 0). The mixture level tracking model is not used in a compressor component.

The digit p is not used and must be input as zero (p = 0). The major edit output will show p = 1. The water packing scheme is not used.

The digit v is not used and must be input as zero (v = 0). The major edit output will show v = 1. The vertical stratification model is not used.

The digit b is not used and must be input as zero (b = 0). The major edit will show b = 0. The rod bundle interphase friction is not used.

The digit f that normally specifies whether wall friction is to be computed is not used and a 0 must be entered. No wall friction is computed for a compressor, since it is included in the homologous compressor data. The major edit output will show f = 1, which indicates that the no friction flag is set.

The digit e specifies if nonequilibrium or equilibrium is to be used; e = 0 specifies that a nonequilibrium (unequal temperature) calculation is to be used, and e = 1 specifies that an equilibrium (equal temperature) calculation is to be used. Equilibrium volumes should not be connected to nonequilibrium volumes. The equilibrium option is provided only for comparison to other codes.

W8(I) Optional control word for elevation (or position) changes. The elevation change in W6 is the change in the vertical direction as the flow passes from the x inlet face to the x outlet face. This is the only elevation change needed for the x coordinate. This control word may be 0, 1, or 2. If not entered, the default value is 1. If this word is entered as 0, the position changes for the x coordinate are computed from the x volume length (W2) and the azimuthal and inclination angles, and W6, W9, and W10 are not used. If this word is entered as 1, the position changes for the x coordinate are the elevation change (W6) for the change in the fixed z direction, from the x volume length (W2) and the azimuthal and inclination angles for the change in the fixed x and y directions, and W9 and W10 are not used. If this word is entered as 2, the position changes for the x coordinate are the elevation change (W6), W9, and W10.

W9(R) Position change in the fixed x direction as flow passes from the x inlet face to the x outlet face (m, ft). If not entered, the default value is 0.0.

W10(R) Position change in the fixed y direction as flow passes from the x inlet face to the x outlet face (m, ft). If not entered, the default value is 0.0.

7.10.4 Card CCC0108, Compressor Inlet (Suction) Junction

This card is required for a compressor component.

W1(I) Volume code of connecting volume on inlet side. This refers to the component <u>from</u> which the junction coordinate direction originates. An old or an expanded format can be used to connect volumes. In the old format (only allowed for connection <u>from</u> 1-D components), use CCC000000 if the connection is <u>from</u> the inlet side of the component and use CCC010000 if the connection is <u>from</u> the outlet side of the component. In the expanded format, the connection code for 1-D components is CCCXX000F [where CCC is the component number, XX is the volume number (greater than 00 and less than 100) for 1-D pipes/annuli/pressurizers, XX is 01 for all other 1-D components, and F indicates the face number], and the connection code for 3-D components is CCCXYYZZF (where CCC is the component number, X is the first coordinate direction position number, YY is the second coordinate direction position number, ZZ is the third coordinate direction position number, and F indicates the face number). A nonzero F specifies the expanded format. The number F equal to 1 and 2 specifies the inlet and outlet faces for the first coordinate direction, which is a 1-D volume's coordinate direction (see Section 2.1 of Volume II of this manual). The number F equal to 3 through 6 specifies crossflow for 1-D volumes. The number F equal to 3 and 4 would specify inlet and outlet faces for the second coordinate direction; F equal to 5 and 6 would do the same for the third coordinate direction. For connecting <u>from</u> a time-dependent volume using the old format, both CCC000000 and CCC010000 are allowed. For connecting <u>from</u> a time-dependent volume using the expanded format, only the number F equal to 1 or 2 is allowed. Section 4.4 in this Appendix discusses this further.

W2(R) Junction flow area (m^2, ft^2). If zero, the junction flow area is set to the minimum of the volume flow areas of adjoining volumes. For abrupt area changes, the junction flow area must be equal to or smaller than the minimum of the adjoining volume flow areas. For smooth area changes, there are no restrictions.

W3(R) Reynolds number independent forward flow energy loss coefficient, A_F. This quantity will be used in each of the phasic momentum equations when the junction velocity of that phase is positive or zero. A variable loss coefficient may be specified (see Section 7.9.7 of this Appendix). The interpretation and use of the coefficient depends on whether the smooth or abrupt area change option is specified or grid spacers are modeled (see Section 2.4.1 of Volume II of this manual). This quantity must be greater than or equal to zero. See Section 5.6 of Volume V for more information.

W4(R) Reynolds number independent reverse flow energy loss coefficient, A_R. This quantity will be used in each of the phasic momentum equations when the junction velocity of that phase is negative. A variable loss coefficient may be specified (see Section 7.9.7 of this Appendix). The interpretation and use of the coefficient depends on whether the smooth or abrupt area change option is specified or grid spacers are modeled (see Section 2.4.1 of Volume II of this manual). This quantity must be greater than or equal to zero. See Section 5.6 of Volume V for more information.

W5(I) Junction control flags. This word has the packed format jefvcahs. It is not necessary to input leading zeros.

The digit j is not used and should be input as zero (j = 1). The jet junction model is not used.

The digit e is not used and should be input as zero (e = 0).

The digit f specifies CCFL options; f = 0 specifies that the CCFL model will not be applied, and f = 1 specifies that the CCFL model will be applied.

The digit v is not used and should be input as zero (v = 0). The stratification entrainment/pullthrough model is not used.

The digit c specifies choking options; c = 0 specifies that the standard choking model will be applied, c = 1 specifies that neither choking model will be applied, and c = 2 specifies that the modified Henry-Fauske choking model will be applied.

The digit a specifies area change options (see Volume II, Section 2.4.1 and Volume V, Section 4.6.3); a = 0 specifies either a smooth area change or no area change, a = 1 specifies the full abrupt area change model (code-calculated K_{loss}, area apportioning at a branch, restricted junction area, and extra interphase drag), and a = 2 specifies the partial

abrupt area change model (no code-calculated K_{loss}, but includes area apportioning at a branch, restricted junction area, and extra interphase drag).

The digit h specifies nonhomogeneous or homogeneous; h = 0 specifies the nonhomogeneous (two-velocity momentum equations) option, and h = 1 or 2 specifies the homogeneous (single-velocity momentum equation) option. For the homogeneous option (h = 1 or 2), the major edit printout will show a one.

The digit s is not used and should be input as zero (s = 0).

7.10.5 Card CCC0109, Compressor Outlet (Discharge) Junction

This card is optional for a compressor component. The format for this card is identical to Card CCC0108 except data are for the outlet junction, if one is supplied with the component; use to instead of from.

7.10.6 Card CCC0110, Compressor Inlet (Suction) Junction Diameter and CCFL Data

This card is optional. The defaults indicated for each word are used if the card is not entered. If this card is being used to specify only the junction hydraulic diameter for the interphase drag calculation (i.e., f = 0 in Word 5 of Card CCC0108), then the diameter should be entered in Word 1 and any allowable values should be entered in Words 2 through 4 (will not be used). If the card is being used for the CCFL model (i.e., f = 1 in Word 5 of Card CCC0108), then enter all four words for the appropriate CCFL model if values different from the default values are desired.

W1(R) Junction hydraulic diameter, D_j (m, ft). This is the junction hydraulic diameter used in the CCFL correlation equation, interphase drag, and form loss Reynolds number. This number must be ≥ 0. This number should be computed from $4.0 \bullet \left(\frac{\text{volume flow area}}{\text{wetted perimeter}}\right)$. If a zero is entered or the default is used, the junction diameter is computed from $2.0 \bullet \left(\frac{\text{volume flow area}}{\pi}\right)^{0.5}$. See Word 2 of Card CCC0108 for the junction area.

W2(R) Flooding correlation form, b. If zero, the Wallis CCFL form is used. If one, the Kutateladze CCFL form is used. If between zero and one, Bankoff weighting between the Wallis and Kutateladze CCFL forms is used. This number must be > 0 and < 1. The default value is 0 (Wallis form). See Section 3 of Volume I for details of the model.

W3(R) Vapor/gas intercept, c. This is the vapor/gas intercept used in the CCFL correlation (when $H_f^{1/2} = 0$) and must be > 0. The default value is 1.

W4(R) Slope, m. This is the slope used in the CCFL correlation and must be > 0. The default value is 1.

7.10.7 Card CCC0111, Compressor Outlet (Discharge) Junction Diameter and CCFL Data

This card is optional. The defaults indicated for each word are used if the card is not entered. If this card is being used to just specify the junction hydraulic diameter for the interphase drag calculation (i.e., f = 0 in Word 5 of Card CCC0109), then the diameter should be entered in Word 1 and any allowable values should be entered in Words 2 through 4 (will not be used). If the card is being used for the CCFL model (i.e., f = 1 in Word 5 of Card CCC0109), then enter all four words for the appropriate CCFL model if values different from the default values are desired. The format for this card is identical to Card CCC0110 except that data are for the outlet junction.

7.10.8 Card CCC0112, Compressor Inlet (Suction) Junction Form Loss Data

This card is optional. The user-specified form loss coefficients are given in Words 3 and 4 of Card CCC0108 if this card is not entered. If this card is entered, the form loss coefficients depend on the flow conditions and are calculated from

$$K_F = A_F + B_F Re^{-C_F}$$

$$K_R = A_R + B_R Re^{-C_R}$$

where K_F and K_R are the forward and reverse form loss coefficients; A_F, A_R, B_F, B_R, C_F, and C_R are user-specified constants. A_F and A_R are Words 3 and 4 of Card CCC0108; B_F, B_R, C_F, and C_R are Words 1, 2, 3, and 4 of this card (CCC0112); and Re is the junction Reynolds number based on mixture fluid properties. If this card is being used for the form loss calculations, then enter all four words for the appropriate expression.

W1(R) B_F (> 0). This quantity must be greater than or equal to zero.

W2(R) C_F (> 0). This quantity must be greater than or equal to zero.

W3(R) B_R (> 0). This quantity must be greater than or equal to zero.

W4(R) C_R (> 0). This quantity must be greater than or equal to zero.

7.10.9 Card CCC0113, Compressor Outlet (Discharge) Junction Form Loss Data

This card is optional. The user-specified form loss coefficients are given in Words 3 and 4 of Cards CCC0109 if this card is not entered. If this card is entered, the form loss coefficients depend on the flow conditions and are calculated from

$$K_F = A_F + B_F Re^{-C_F}$$

$$K_R = A_R + B_R Re^{-C_R}$$

where K_F and K_R are the forward and reverse form loss coefficients; A_F, A_R, B_F, B_R, C_F, and C_R are user-specified constants. A_F and A_R are Words 3 and 4 of Card CCC0109; B_F, B_R, C_F, and C_R are Words 1, 2, 3, and 4 on this card (CCC0113); and Re is the junction Reynolds number based on mixture fluid properties. If these cards are being used for the form loss calculations, then enter all four words for the appropriate expression. The format for this card is identical to Card CCC0112 except data are for the outlet junction.

7.10.10 Card CCC0200, Compressor Volume Initial Conditions

This card is required for a compressor component.

W1(I) Control word. This word has the packed format εbt. It is not necessary to input leading zeros.

The digit ε specifies the fluid, where ε = 0 is the default fluid. The value for ε > 0 corresponds to the position number of the fluid type indicated on the 120 - 129 cards (i.e., ε = 1 specifies H_2O, ε = 2 specifies D_2O, etc.). The default fluid is that set for the hydrodynamic system by Cards 120 through 129 or this control word in another volume in this hydrodynamic system. The fluid type set on Cards 120 through 129 or these control words must be consistent (i.e., not specify different fluids). If Cards 120 through 129 are not entered and all control words use the default ε = 0, then H_2O is assumed to be the fluid.

The digit b specifies whether boron is present or not. Entering b = 0 specifies that the volume liquid does not contain boron; b = 1 specifies that a boron concentration in mass of boron per mass of liquid (which may be zero) is being entered after the other required thermodynamic information.

The digit t specifies how the following words are to be used to determine the initial thermodynamic state. Entering t equal to 0 through 3 specifies one component (vapor/liquid). Entering t equal to 4, 5, 6, or 8 allows the specification of two components (vapor/liquid and noncondensable gas).

With options t equal to 4, 5, 6, or 8, the names of the components of the noncondensable gas must be entered on Card 110, and the mass fractions of the components of the noncondensable gas are entered on Card 115 (if more than 1 noncondensable component

is specified on Card 110). Card CCC0300 may be used for the mass fractions of the components of the noncondensable gas.

If t = 0, the next four words are interpreted as pressure (Pa, lb_f/in^2), liquid specific internal energy (J/kg, Btu/lb_m), vapor/gas specific internal energy (J/kg, Btu/lb_m), and vapor/gas void fraction. These quantities will be interpreted as nonequilibrium or equilibrium conditions depending on the specific internal energies used to define the thermodynamic state. Enter only the minimum number of words required. If entered, boron concentration (mass of boron per mass of liquid) follows the last required word for thermodynamic conditions.

If t = 1, the next two words are interpreted as temperature (K, °F) and static quality in equilibrium condition. Enter only the minimum number of words required. If entered, boron concentration (mass of boron per mass of liquid) follows the last required word for thermodynamic conditions.

If t = 2, the next two words are interpreted as pressure (Pa, lb_f/in^2) and static quality in equilibrium condition. Enter only the minimum number of words required. If entered, boron concentration (mass of boron per mass of liquid) follows the last required word for thermodynamic conditions.

If t = 3, the next two words are interpreted as pressure (Pa, lb_f/in^2) and temperature (K, °F) in nonequilibrium or equilibrium conditions depending on the pressure and temperature used to define the thermodynamic state. Enter only the minimum number of words required. If entered, boron concentration (mass of boron per mass of liquid) follows the last required word for thermodynamic conditions.

The following options are used for input of noncondensable states. In all cases, the criteria used for determining the range of values for static quality are;

1. 1.0E-9 < static quality < 0.99999999, two phase conditions

2. static quality < 1.0E-9 or static quality > 0.99999999, single-phase conditions.

The static quality is given by $M_g/(M_g + M_f)$, where $M_g = M_s + M_n$. Section 3.2 of Volume I of the manual discusses this further.

Noncondensable options are as follows:

If t = 4, the next three words are interpreted as pressure (Pa, lb_f/in^2), temperature (K, °F), and static quality in equilibrium condition. Using this input option with static quality > 0.0 and < 1.0, saturated noncondensables (100% relative humidity) will result. The

temperature is restricted to be less than the saturation temperature at the input pressure and less than the critical temperature; otherwise an input error will occur. Setting static quality to 0.0 is used as a flag that will initialize the volume to all noncondensables (dry noncondensable, 0% relative humidity) with no temperature restrictions. Static quality is reset to 1.0 using this dry noncondensable option. Enter only the minimum number of words required. If entered, boron concentration (mass of boron per mass of liquid) follows the last required word for thermodynamic conditions.

If t = 5, the next three words are interpreted as temperature (K, °F), static quality, and noncondensable quality in equilibrium condition. Both the static and noncondensable qualities are restricted to be between 1.0E-9 and 0.99999999. Little experience has been obtained using this option, and it has not been checked out. Enter only the minimum number of words required. If entered, boron concentration (mass of boron per mass of liquid) follows the last required word for thermodynamic conditions.

If t = 6, the next five words are interpreted as pressure (Pa, lb_f/in^2), liquid specific internal energy (J/kg, Btu/lb_m), vapor/gas specific internal energy (J/kg, Btu/lb_m), vapor/gas void fraction, and noncondensable quality. These quantities will be interpreted as nonequilibrium or equilibrium conditions depending on the specific internal energies used to define the thermodynamic state. This option can be used to set the relative humidity to less than or equal to 100%. The combinations of vapor/gas void fraction and noncondensable quality must be thermodynamically consistent. If the noncondensable quality is set to 0.0, noncondensables are not present and the input processing branches to that type of processing (t = 0). For this situation, Card 110 must be entered, and Card 115 must be entered if more than 1 noncondensable component is specified on Card 110. If noncondensables are present (noncondensable quality greater than 0.0), then the vapor/gas void fraction must also be greater than 0.0. If the noncondensable quality is set to 1.0 (pure noncondensable, 0% relative humidity), then the vapor/gas void fraction must also be 1.0. When both the vapor/gas void fraction and the noncondensable quality are set to 1.0, the volume temperature is calculated from the noncondensable energy equation using the input vapor/gas specific internal energy. Enter only the minimum number of words required. If entered, boron concentration (mass of boron per mass of liquid) follows the last required word for thermodynamic conditions.

If t = 8, the next five words are interpreted as pressure (Pa, lb_f/in^2), liquid temperature (K, °F), vapor/gas temperature (K, °F), vapor/gas void fraction, and noncondensable quality. These quantities will be interpreted as nonequilibrium or equilibrium conditions depending on the temperatures used to define the thermodynamic state. This option can be used to set the relative humidity to less than or equal to 100%. The combinations of vapor/gas void fraction and noncondensable quality must be thermodynamically consistent. If the noncondensable quality is set to 0.0, noncondensables are not present and the input processing branches to that type of processing. For this situation, Card 110 must

be entered, and Card 115 must be entered if more than 1 noncondensable component is specified on Card 110. If noncondensables are present (noncondensable quality greater than 0.0), then the vapor/gas void fraction must also be greater than 0.0. If the noncondensable quality is set to 1.0 (pure noncondensable, 0% relative humidity), then the vapor/gas void fraction must also be 1.0. When both the vapor/gas void fraction and the noncondensable quality are set to 1.0, the volume specific internal energy is calculated from the noncondensable energy equation using the input vapor/gas temperature. Enter only the minimum number of words required. If entered, boron concentration (mass of boron per mass of liquid) follows the last required word for thermodynamic conditions.

W2-W7(R) Quantities as described under Word 1. Depending on the control word, two through five thermodynamic quantities may be required. Enter only the minimum number required. If entered, boron concentration (mass of boron per mass of liquid) follows the last required word for thermodynamic conditions.

7.10.11 Card CCC0201, Compressor Inlet (Suction) Junction Initial Conditions

This card is required for a compressor component.

W1(I) Control word. If zero, the next two words are velocities; if one, the next two words are mass flow rates.

W2(R) Initial liquid velocity or initial liquid mass flow rate. This quantity is either velocity (m/s, ft/s) or mass flow rate (kg/s, lb_m/s), depending on the control word.

W3(R) Initial vapor/gas velocity or initial vapor/gas mass flow rate. This quantity is either velocity (m/s, ft/s) or mass flow rate (kg/s, lb_m/s), depending on the control word.

W4(R) Initial interface velocity (m/s, ft/s). Enter zero.

7.10.12 Card CCC0202, Compressor Outlet (Discharge) Junction Initial Conditions

This card is optional for the compressor component. This card is similar to Card CCC0201 except that data are for the outlet junction, if supplied with the compressor component.

7.10.13 Card CCC0300, Compressor Volume Noncondensable Mass Fractions

This card is optional. If omitted, the noncondensable mass fractions are obtained from the noncondensable mass fractions entered on Card 115.

W1-WN(R) Mass fractions of the noncondensable species entered on Card 110. The number of words on this card should be the same as on Card 110. The noncondensable mass fractions must sum to 1.0 within a relative error of 1.0×10^{-10}.

7.10.14 Card CCC0301, Compressor Indicator and Option

This card is required for a compressor component.

W1(I) Compressor performance data table indicator. If zero, the compressor performance data tables are entered with this component.

W2(I) Compressor motor torque table indicator. If -1, no compressor motor torque table is used. If zero, a compressor motor torque table is entered for this compressor component.

W3(I) Time-dependent compressor rotational velocity indicator. If -1, no time-dependent compressor rotational velocity table is used and the compressor rotational velocity is always determined by the torque-inertia equation. If zero, a rotational velocity table is entered with this component. A compressor rotational velocity table cannot be used when the compressor is connected to a shaft control component.

W4(I) Compressor motor trip number. When the motor trip is off, electrical power is supplied to the compressor motor; when the motor trip is on, electrical power is disconnected from the compressor motor. If the compressor rotational velocity table is being used during a time step (i.e., a compressor rotational velocity table has be entered in the input deck, and the compressor rotational velocity table trip number is zero or the compressor rotational velocity table trip number is nonzero and the compressor rotational velocity table trip is on), the compressor rotational velocity is computed from the compressor rotational velocity table. If the compressor rotational velocity table is not being used during a time step (i.e., a compressor rotational velocity table has not been entered in the input deck or the compressor rotational velocity table has be entered in the input deck, the compressor rotational velocity table trip number is not zero, and the compressor rotational velocity table trip is off), the compressor rotational velocity depends on the compressor motor torque data and this trip. If the motor trip is off and no compressor motor torque data are present, the compressor rotational velocity is the same as for the previous time step. This will be the initial compressor rotational velocity if the compressor trip has never been set. Usually the compressor motor trip is a latched trip, but that is not necessary. If the motor trip is off and a compressor motor torque table is present, the compressor rotational velocity is given by the torque-inertia equation where the net torque is given by the compressor motor torque data, the hydraulic torque from the compressor performance tables, and the frictional torque data. If the compressor motor trip is on, the torque-inertia equation is used and the compressor motor torque is set to zero. If the compressor motor trip number is zero, no motor trip is tested and the compressor motor trip is assumed to be off.

W5(I) Reverse indicator. If zero, no reverse is allowed; if one, reverse is allowed.

7.10.15 Cards CCC0302 through CCC0304, Compressor Description

This card (or cards) is required for a compressor component. Note that for the compressor component, rated values for pressure ratio and efficiency are not entered. The data for these quantities are entered directly on cards CCCXX00 through CCCXX99 ($11 \le XX \le 99$).

W1(R) Rated compressor rotational velocity, ω_R (rad/s, rev/min).

W2(R) Ratio of initial compressor rotational velocity to rated compressor rotational velocity. Used for calculating initial compressor rotational velocity.

W3(R) Rated compressor mass flow rate, $\dot{m}_R$ (kg/s, lb_m/s).

W4(R) Rated stagnation sonic speed, $a_{0,R}$ (m/s, ft/s).

W5(R) Moment of inertia, I_{cn} (kg-m^2, lb_m-ft^2). This includes all direct coupled rotating components, including the motor for a motor driven compressor.

W6(R) Rated stagnation fluid density, $\rho_{0,R}$ (kg/m^3, lb_m/ft^3).

W7(R) Rated compressor motor torque (N·m, lb_f·ft). If this word is zero, the rated compressor motor torque is computed from the initial compressor velocity and the compressor torque that is computed from the initial compressor velocity, initial volume conditions, and the torque from the compressor performance data. This quantity must be nonzero if the relative compressor motor torque table is entered.

W8(R) t_{fr2}, friction torque coefficient (N·m, lb_f·ft). This parameter multiplies the absolute value of the speed ratio (compressor speed/rated compressor speed) to the second power. The friction torque factors are summed together.

W9(R) t_{fr0}, friction torque coefficient (N·m, lb_f·ft). This is constant frictional torque.

W10(R) t_{fr1}, friction torque coefficient (N·m, lb_f·ft). This multiplies the absolute value of the speed ratio to the first power.

W11(R) t_{fr3}, friction torque coefficient (N·m, lb_f·ft). This multiplies the absolute value of the speed ratio to the third power.

7.10.16 Card CCC0308, Compressor Variable Inertia

Compressor inertia is given by Word 5 of Card CCC0302-CCC0304 if this card is not entered. If this card is entered, the compressor inertia is computed from

$$I = I_{cn} \qquad \text{for } \left|\frac{\omega}{\omega_R}\right| < S_{CI}$$

and

$$I = I_{c0} + I_{c1}\left|\frac{\omega}{\omega_R}\right| + I_{c2}\left|\frac{\omega}{\omega_R}\right|^2 + I_{c3}\left|\frac{\omega}{\omega_R}\right|^3 \qquad \text{for } \left|\frac{\omega}{\omega_R}\right| \geq S_{CI}$$

where ω is the compressor speed and ω_R is the rated compressor speed from Word 1 of Cards CCC0302-CCC0304, and I_{cn} is from Word 5 of Cards CCC0302-CCC0304. If this card is entered, all five words must be input.

W1(R) Compressor inertial critical speed ratio, S_{CI}. When the absolute value of the compressor speed ratio is greater than or equal to S_{CI}, the cubic expression for inertial is used. When the absolute value of the compressor speed ratio is less than S_{CI}, the inertia (I_{cn}) from Word 5 of Card CCC0302-CCC0304 is used.

W2(R) Cubic inertial coefficient, I_{c3} ($kg \cdot m^2$, $lb_m \cdot ft^2$).

W3(R) Quadratic inertial coefficient, I_{c2} ($kg \cdot m^2$, $lb_m \cdot ft^2$).

W4(R) Linear inertial coefficient, I_{c1} ($kg \cdot m^2$, $lb_m \cdot ft^2$).

W5(R) Constant inertial coefficient, I_{c0} ($kg \cdot m^2$, $lb_m \cdot ft^2$).

7.10.17 Card CCC0309, Compressor-Shaft Connection

If this card is entered, the compressor is connected to a SHAFT component. The compressor may still be driven by a compressor motor that can be described in this component, by a turbine also connected to the SHAFT component, or from torque computed by the control system and applied to the SHAFT component. The compressor speed table may not be entered if this card is entered.

W1(I) Control component number of the shaft component.

W2(I) Compressor-shaft disconnect trip. If this quantity is omitted or zero, the compressor is always connected to the SHAFT. If nonzero, the compressor is connected to the shaft when the trip is false and disconnected when the trip is true.

7.10.18 Card CCC0310, Compressor Stop Data

If this card is omitted, the compressor will not be stopped by the program.

W1(R) Elapsed problem time for compressor stop (s).

W2(R) Maximum forward velocity for compressor stop (rad/s, rev/min).

W3(R) Maximum reverse velocity for compressor stop (rad/s, rev/min). Reverse velocity is a negative number.

7.10.19 Card CCC0401 through CCC0499, Compressor Relative Motor Torque Data

These cards are required only if W2 of Card CCC0301 is zero. If the compressor velocity table is not being used and these cards are present, the torque-inertia equation is used. When the electrical power is supplied to the compressor motor (the compressor trip is off), the net torque is computed from the rated compressor motor torque times the compressor relative motor torque from this table and the torque from the compressor performance data. If the electrical power is disconnected from the compressor (the compressor trip is on), the compressor motor torque is zero.

W1(R) Compressor rotational velocity (rad/s, rev/min).

W2(R) Compressor relative motor torque.

Additional pairs as needed are added on this or additional cards, up to a limit of 100 pairs. Compressor velocities must be in increasing order.

7.10.20 Card CCC0500, Compressor Time-Dependent Rotational Velocity Control

This card is required only if W3 of Card CCC0301 is zero. The compressor rotational velocity table (Cards CCC0501-CCC0599), if present, has priority in setting the compressor rotational velocity over the compressor motor trip, the compressor motor torque data, and the torque-inertia equation.

W1(I) Rotational velocity table trip number. This quantity is required. If the table trip number is zero, the compressor rotational velocity is always computed from this table, and the search argument is the advancement time. If the table trip number is nonzero, the state of the table trip determines when the table is to be used. If the table trip is off, the compressor rotational velocity is set from the state of the compressor motor trip (Word 4 on Card CCC0301), the compressor motor torque data, and the torque-inertia equation as if this table had not been entered. If the table trip is on, the compressor rotational velocity is computed from this table. If the table trip is on and Words 2 and 3 are not entered on this card, the search variable in the table is time, and the search argument is advancement time minus the table trip activation time. If this word is used, it takes precedence over the compressor motor trip number used in Word 4 of the CCC0301 card.

W2(A) Alphanumeric part of variable request code. This quantity is optional. If not present, time is the search argument. If present, this word and the next are a variable request code that

specifies the search argument for the table lookup and interpolation. TIME can be selected, but the trip activation time is not subtracted from the advancement time.

W3(I) Numeric part of variable request code. This is assumed to be zero if missing.

7.10.21 Cards CCC0501-CCC0599, Compressor Time-Dependent Rotational Velocity Data

These cards are required only if W3 of Card CCC0301 is zero.

W1(R) Search variable. Units depend on the quantity selected for the search variable.

W2(R) Compressor rotational velocity (rad/s, rev/min).

Additional pairs as necessary are added on this or additional cards, up to a limit of 100 pairs. Search variable values must be in increasing order.

7.10.22 Cards CCC09XX (10 ≤ XX ≤ 99), Compressor Relative Rotational Velocity Data

These cards are required for the compressor component. Pairs of numbers are entered. The first number of the pair is the rotational velocity relative to the rated rotational velocity specified in Word 1 of Card CCC0302. The second number is the number of triples of data (relative corrected mass flow rate, pressure ratio, and efficiency) entered on Cards CCCXX00 through CCCXX99, which correspond to this relative rotational velocity entry. The XX values are not required to be consecutive.

W1(R) Relative corrected rotational velocity.

W2(I) Number of data triples associated with this relative corrected rotational velocity.

. . .

7.10.23 Cards CCCXX00 through CCCXX99 (10 ≤ XX ≤ 99), Compressor Performance Data.

These cards are required for the compressor component, which contain the performance data corresponding to each value of relative rotational velocity entered on the CCC09XX cards. For example, the card numbering could be CCC1000 through CCC1099 for the first data set, CCC1100 through CCC1199 for the second data set, up to a maximum of CCC9900 through CCC9999 for the 90th data set. The data are entered in triples, which correspond to relative corrected mass flow rate, pressure ratio, and efficiency. The order of the XX values on these cards corresponds to the order of the XX values on the CCC09XX cards, but the XX values do not have to be the same for both sets of cards.

W1(R) Relative corrected mass flow rate.

W2(R) Pressure ratio.

W3(R) Efficiency.

7.11 Multiple Junction Component

7.11.1 Card CCC0000, Multiple Junction Name and Type

This card is required.

W1(A) Component name. Use a name descriptive of the component's use in system. A limit of 8 characters is allowed for most computers, e.g., work stations, CRAY, and IBM computers.

W2(A) Component type. Enter MTPLJUN to indicate a multiple junction component or the command DELETE. The command DELETE is allowed only in RESTART problems, and the component number must be an existing component at the time of restart. The DELETE command deletes the component.

The one or more junctions specified by this component can connect volumes in the same manner as several single-junction components except that all the volumes connected by the junctions in the component must be in the same hydrodynamic system. If this restriction is violated, corrective action is to merge the hydrodynamic systems.

For major edits, minor edits, and plot variables, the junctions in the multiple junction component are numbered CCCIINN00, where NN is the set number and II is the junction number within the set. The quantity NN may be 01 through 99; II is 01 for the first junction described in a set and incremented by one for each additional junction ($01 \leq II \leq 99$). The quantity II does not appear as part of a card number.

7.11.2 Card CCC0001, Multiple Junction Information

This card is required.

W1(I) Number of junctions, nj. This number must be > 0 and < 100.

W2(I) Initial condition control. This word is optional and, if missing, is assumed to be zero. If zero is entered, the initial conditions on Cards CCC1FFM are velocities; if one is entered, the initial conditions are mass flow rates.

7.11.3 Cards CCC0NNM, Multiple Junction Geometry

These cards are required. Junctions are described by one or more sets of data, NN being the set number and M being the card number within a set. The junctions are numbered as CCCIINN00, where II is 01 for the first junction described in a set and increments by one for each additional junction in a set. The quantity NN may be 01 through 99, and M may be 1 through 9. Cards are processed by increasing set number NN, and cards within a set by increasing M. Neither NN nor M need be strictly consecutive.

The card number M within a set is used in a manner similar to the card numbering for junctions for the branch, separator, jetmixer, turbine, feedwater heater, or ECC mixer components. For the branch, separator, jetmixer, turbine, feedwater heater, or ECC mixer components, the card numbering is CCCN101 through CCCN109. This means that for a given junction N, 9 cards (CCCN101 through CCCN109) are allowed to be used to input the 9 words allowed on the cards. For the multiple junction component, the card numbering is CCC0NN1 through CCC0NN9. This means that for a given set of junctions, NN, 9 cards (CCC0NN1 through CCC0NN9) are allowed to be used to input 13 words allowed on the cards.

W1(I) From connection code to a component. This refers to the component from which the junction coordinate direction originates. An old or an expanded format can be used to connect volumes. In the old format (only allowed for connection from 1-D components), use CCC000000 if the connection is from the inlet side of the component and use CCC010000 if the connection is from the outlet side of the component. In the expanded format, the connection code for 1-D components is CCCXX000F [where CCC is the component number, XX is the volume number (greater than 00 and less than 100) for 1-D pipes/annuli/pressurizers, XX is 01 for all other 1-D components, and F indicates the face number], and the connection code for 3-D components is CCCXYYZZF [where CCC is the component number, X is the first coordinate direction (x or r) position number, YY is the second coordinate direction (y or θ) position number, ZZ is the third coordinate direction (z) position number, and F indicates the face number]. A nonzero F specifies the expanded format. The number F equal to 1 and 2 specifies the inlet and outlet faces for the first coordinate direction (x or r), which is a 1-D volume's coordinate direction (x) (see Section 2.1 of Volume II of this manual). The number F equal to 3 through 6 specifies crossflow (y or z) for 1-D volumes. The number F equal to 3 and 4 would specify inlet and outlet faces for the second coordinate direction (y or θ); F equal to 5 and 6 would do the same for the third coordinate direction (z). For connecting from a time-dependent volume using the old format, both CCC000000 and CCC010000 are allowed. For connecting from a time-dependent volume using the expanded format, only the number F equal to 1 or 2 is allowed. Section 4.4 in this Appendix discusses this further.

W2(I) To connection code to a component. This refers to the component at which the junction coordinate direction ends. See the description for W1 above; use to instead of from.

W3(R) Junction flow area (m^2, ft^2). If zero, the junction flow area is set to the minimum volume flow area of the adjoining volumes. For abrupt area changes, the junction flow area must be equal to or smaller than the minimum of the adjoining volume flow areas. For smooth area changes, there are no restrictions.

W4(R) Reynolds number independent forward flow energy loss coefficient, A_F. This quantity will be used in each of the phasic momentum equations when the junction velocity of that phase is positive or zero. A variable loss coefficient may be specified (see Section 7.11.6 of this Appendix). The interpretation and use of the coefficient depends on whether the

smooth or abrupt area change option is specified or grid spacers are modeled (see Section 2.4.1 of Volume II of this manual). This quantity must be greater than or equal to zero. See Section 5.6 of Volume V for more information.

W5(R) Reynolds number independent reverse flow energy loss coefficient, A_R. This quantity will be used in each of the phasic momentum equations when the junction velocity of that phase is negative. A variable loss coefficient may be specified (see Section 7.11.6 of this Appendix). The interpretation and use of the coefficient depends on whether the smooth or abrupt area change option is specified or grid spacers are modeled (see Section 2.4.1 of Volume II of this manual). This quantity must be greater than or equal to zero. See Section 5.6 of Volume V for more information.

W6(I) Junction control flags. This word has the packed format jefvcahs. It is not necessary to input leading zeros.

The digit j is not used and should be input as zero (j = 0). The jet junction model is not used.

The digit e specifies the modified PV term in the energy equations; e = 0 specifies that the modified PV term will not be applied, and e = 1 specifies that the modified PV term will be applied.

The digit f specifies CCFL options; f = 0 specifies that the CCFL model will not be applied, and f = 1 specifies that the CCFL model will be applied.

The digit v is not used and should be input as zero (v = 0). The stratification entrainment/pullthrough model is not used.

The digit c specifies choking options; c = 0 specifies that the standard choking model will be applied, c = 1 specifies that neither choking model will be applied, and c = 2 specifies that the modified Henry-Fauske choking model will be applied.

The digit a specifies area change options (see Volume II, Section 2.4.1 and Volume V, Section 4.6.3); a = 0 specifies either a smooth area change or no area change, a = 1 specifies the full abrupt area change model (code-calculated K_{loss}, area apportioning at a branch, restricted junction area, and extra interphase drag), and a = 2 specifies the partial abrupt area change model (no code-calculated K_{loss}, but includes area apportioning at a branch, restricted junction area, and extra interphase drag). It is recommended that the abrupt area change model (a = 1 or a = 2) be used at branches.

The digit h specifies nonhomogeneous or homogeneous; h = 0 specifies the nonhomogeneous (two-velocity momentum equations) option, and h = 1 or 2 specifies the

homogeneous (single-velocity momentum equation) option. For the homogeneous option (h = 1 or 2), the major edit printout will show h = 1.

The digit s specifies momentum flux options; s = 0 specifies momentum flux in both the to and from volume, s = 1 specifies momentum flux in the from volume but not in the to volume, s = 2 specifies momentum flux in the to volume but not in the from volume, and s = 3 specifies no momentum flux in either the to volume or the from volume.

The meaning of the following three words (W7, W8, and W9) are different depending on the choking model chosen with the c junction control flag.

If c = 0 or c = 1, then the following definitions are used:

W7(R) Subcooled discharge coefficient. This quantity is applied only to subcooled liquid choked flow calculations if c = 0 and is not used if c = 1. The quantity must be > 0.0 and ≤ 2.0.

W8(R) Two-phase discharge coefficient. This quantity is applied only to two-phase choked flow calculations if c = 0 and is not used if c = 1. The quantity must be > 0.0 and ≤ 2.0.

W9(R) Superheated discharge coefficient. This quantity is applied only to superheated vapor/gas choked flow calculations if c = 0 and is not used if c = 1. The quantity must be > 0.0 and ≤ 2.0.

If c = 2, then the following definitions are used:

W7(R) Discharge coefficient. The quantity must be > 0.0 and < 2.0.

W8(R) Thermal nonequilibrium constant. If W8 is < 0.01, the equilibrium option is used and W8 is reset to 0.0. If W8 is > 1000.0, the frozen option is used and W8 is reset to 1000.0.

W9(R) This word is not used (enter 1.0).

The following four words (W10, W11, W12, and W13) are used for all the values of the c junction control flag (c = 0,1,2).

W10(I) From volume increment. Words 1 and 2 contain the from and to connection codes respectively for the first junction defined by the set. If the set defines more than one junction, connection codes for the following junctions are given by the connection code of the previous junction plus the increments in Words 10 and 11. The increments may be positive, negative, or zero. Words 3 through 9 apply to all junctions defined by the set. If additional sets are entered, Words 1 and 2 apply to the next junction, and increments are applied as with the first set. Word 13 for the second and following sets must be greater than Word 13 of the preceding set, and Word 13 of the last set must equal nj. Word 13 for

a set is Word 13 for the previous set plus the number of junctions in the current set. Thus, W13 is the running total of the numbers of junctions currently defined for the multiple junction component. A new set is used whenever a new increment is needed, Words 3 through 9 need to be changed, or a change in junction numbering is desired.

W11(I) To volume increment. See description for Word 10.

W12(I) Enter zero. This is reserved for future capability.

W13(I) Running total of the number of junctions. See description for Word 10.

7.11.4 Cards CCC1FFM, Multiple Junction Initial Condition

These cards are required. Initial junction velocities are entered using one or more sets of data. The processing of sets of data is identical to that described in Section 7.11.3 except that there is no relationship between the sets (FF) in these cards (CCC1FFM) and the sets (NN) in the multiple junction geometry cards (CCC0NNM). Likewise, these cards do not affect the numbering of the junctions. For Cards CCC1FFM, Word 3 for the second and following sets must be greater than Word 3 of the preceding set, and Word 3 of the last set must be equal to nj. Word 3 for a set is Word 3 of the previous set plus the number of junctions in the current set. Thus, W3 is a running total of the number of junctions currently defined for the multiple junction component, A new set is used whenever a change in junction velocities (initial condition) is desired.

W1(R) Initial liquid velocity or initial liquid mass flow rate. This quantity is either velocity (m/s, ft/s) or mass flow rate (kg/s, lb_m/s), depending on control Word 2 of Card CCC0001.

W2(R) Initial vapor/gas velocity or initial vapor/gas mass flow rate. This quantity is either velocity (m/s, ft/s) or mass flow rate (kg/s, lb_m/s), depending on control Word 2 of Card CCC0001.

W3(I) Junction limit.

7.11.5 Cards CCC2GGM, Multiple Junction Diameter and CCFL Data

These cards are optional. The defaults indicated for each word are used if the card is not entered. If the card is being used to specify only the junction hydraulic diameter for the interphase drag calculation (i.e., f = 0 in Word 6 of Cards CCC0NNM), then the diameter should be entered in Word 1 and any allowable values should be entered in Words 2 through 4 (will not be used). If this card is being used for the CCFL model (i.e., f = 1 in Word 6 of Cards CCC0NNM), then enter all four words for the appropriate CCFL model if values different from the default values are desired. The processing of sets of data is identical to that described in Section 7.11.3 except that there is no relationship between the sets (GG) in these cards (CCC2GGM) and the sets (NN) in the multiple junction geometry cards (CCC0NNM). Likewise, these cards do not affect the numbering of the junctions. For Cards CCC2GGM, Word 5 for the

second and following sets must be greater that Word 5 of the preceding set, and Word 5 of the last set must equal nj. Word 5 for a set is Word 5 of the previous set plus the number of junctions in the current set. Thus, W5 is the running total on the number of junction currently defined for the multiple junction component. A new set is used whenever a change in junction diameter and CCFL data is desired.

W1(R) Junction hydraulic diameter, D_j (m, ft). This is the junction hydraulic diameter used in the CCFL correlation equation, interphase drag, and form loss Reynolds number. This number be $\geq$ 0. This number should be computed from $4.0 \bullet \left(\frac{\text{junction area}}{\text{wetted perimeter}}\right)$. If a zero is entered or if the default is used, the junction diameter is computed from $2.0 \bullet \left(\frac{\text{junction area}}{\pi}\right)^{0.5}$. See Word 3 of Card CCC0NNM for junction area.

W2(R) Flooding correlation form, β. If zero, the Wallis CCFL form is used. If one, the Kutateladze CCFL form is used. If between zero and one, Bankoff weighting between the Wallis and Kutateladze CCFL forms is used. This number must be $\geq$ 0 and $\leq$ 1. The default value is 0 (Wallis form). See Section 3 of Volume I for details of the model.

W3(R) Vapor/gas intercept, c. This is the vapor/gas intercept used in the CCFL correlation (when $H_f^{1/2} = 0$) and must be > 0. The default value is 1.

W4(R) Slope, m. This is the slope used in the CCFL correlation and must be > 0. The default value is 1.

W5(I) Junction limit.

7.11.6 Card CCC3HHM, Multiple Junction Form Loss Data

These cards are optional. The processing of sets of data is identical to that described in Section 7.11.3 except that there is no relationship between the sets (HH) in these cards (CCC3HHM) and the sets (NN) in the multiple junction geometry cards (CCC0NNM). Likewise, these cards do not affect the numbering of the junctions. For Cards CCC3HHM, Word 5 for the second and following sets must be greater that Word 5 of the preceding set, and Word 5 of the last set must equal nj. Word 5 for a set is Word 5 of the previous set plus the number of junctions in the current set. Thus, W5 is the running total on the number of junction currently defined for the multiple junction component. A new set is used whenever a change in junction form loss data is desired. The user-specified form loss coefficients are given in Words 4 and 5 of Card CCC0NNM if these cards are not entered. If these card are entered, the form loss coefficients depend on the flow conditions and are calculated from

$$K_F = A_F + B_F Re^{-C_F}$$

$$K_R = A_R + B_R Re^{-C_R}$$

where K_F and K_R are the forward and reverse form loss coefficients; A_F, A_R, B_F, B_R, C_F, and C_R are user-specified constants. A_F and A_R are Words 4 and 5 of Card CCC0NNM; B_F, B_R, C_F, and C_R are Words 1, 2, 3, and 4 on these Cards (CCC3HHM); and Re is the junction Reynolds number based on mixture fluid properties. If these cards are being used for the form loss calculations, then enter all five words for the appropriate expression.

W1(R) B_F (≥ 0). This quantity must be greater than or equal to zero.

W2(R) C_F (≥ 0). This quantity must be greater than or equal to zero.

W3(R) B_R (≥ 0). This quantity must be greater than or equal to zero.

W4(R) C_R (≥ 0). This quantity must be greater than or equal to zero.

W5(I) Junction limit number.

7.12 Multiple Flexible Wall Component

7.12.1 Card CCC0000, Multiple Flexible Wall Name and Type

This card is required.

W1(A) Component name. Use a name descriptive of the component's use in system. A limit of 8 characters is allowed for most computers, e.g., work stations, CRAY, and IBM computers.

W2(A) Component type. Enter MTPLFW to indicate a multiple flexible wall component or the command DELETE. The command DELETE is allowed only in RESTART problems, and the component number must be an existing component at the time of restart. The DELETE command deletes the component. The multiple flexible wall component is like a multiple junction component, except there is no flow through the junctions.

The one or more flexible walls specified by this component can connect volumes in the same manner as several single flexible wall components except that all the volumes connected by the flexible walls in the component must be in the same hydrodynamic system. If this restriction is violated, corrective action is to merge the hydrodynamic systems.

For major edits, minor edits, and plot variables, the flexible walls in the multiple flexible wall component are numbered CCCIINN00, where NN is the set number and II is the junction number within the set. The quantity NN may be 01 through 99; II is 01 for the first flexible wall described in a set and

incremented by one for each additional flexible wall (01 ≤ II ≤ 99). The quantity II does not appear as part of a card number.

7.12.2 Card CCC0001, Multiple Flexible Wall Information

This card is required.

W1(I) Number of flexible walls, nfw. This number must be > 0 and < 100.

7.12.3 Cards CCC0NNM, Multiple Flexible Wall Geometry

These cards are required. Flexible walls are described by one or more sets of data, NN being the set number and M being the card number within a set. The flexible walls are numbered as CCCIINN00, where II is 01 for the first flexible wall described in a set and increments by one for each additional flexible wall in a set. The quantity NN may be 01 through 99, and M may be 1 through 9. Cards are processed by increasing set number NN, and cards within a set by increasing M. Neither NN nor M need be strictly consecutive.

The card number M within a set is used in a manner similar to the card numbering for junctions for the branch, separator, jetmixer, turbine, feedwater heater, or ECC mixer components. For the branch, separator, jetmixer, turbine, feedwater heater, or ECC mixer components, the card numbering is CCCN101 through CCCN109. This means that for a given junction N, 9 cards (CCCN101 through CCCN109) are allowed to be used to input the words allowed on the cards. For the multiple flexible wall component, the card numbering is CCC0NN1 through CCC0NN9. This means that for a given set of flexible walls, NN, 9 cards (CCC0NN1 through CCC0NN9) are allowed to be used to input the 8 words allowed on the cards.

W1(I) <u>From</u> connection code to a component. This refers to the component <u>from</u> which the flexible wall coordinate direction originates. An old or an expanded format can be used to connect volumes. In the old format (only allowed for connection <u>from</u> 1-D components), use CCC000000 if the connection is <u>from</u> the “inlet” side of the component and use CCC010000 if the connection is <u>from</u> the “outlet” side of the component. In the expanded format, the connection code for 1-D components is CCCXX000F [where CCC is the component number, XX is the volume number (greater than 00 and less than 100) for 1-D pipes/annuli/pressurizers, XX is 01 for all other 1-D components, and F indicates the face number], and the connection code for 3-D components is CCCXYYZZF [where CCC is the component number, X is the first coordinate direction (x or r) position number, YY is the second coordinate direction (y or θ) position number, ZZ is the third coordinate direction (z) position number, and F indicates the face number]. A nonzero F specifies the expanded format. The number F equal to 1 and 2 specifies the “inlet” and “outlet” faces for the first coordinate direction (x or r), which is a 1-D volume’s coordinate direction (x) (see Section 2.1 of Volume II of this manual). The number F equal to 3 through 6 specifies crossflow (y or z) for 1-D volumes. The number F equal to 3 and 4 would specify “inlet” and “outlet” faces for the second coordinate direction (y or θ); F equal to 5 and 6 would do

the same for the third coordinate direction (z). Connecting from a time-dependent volume not allowed for the flexible wall component. Connecting to a time-dependent volume is allowed.

W2(I) To connection code to a component. This refers to the component at which the flexible wall coordinate direction ends. See the description for W1 above; use to instead of from. For a large external volume, use a time-dependent volume with a constant pressure.

W3(R) Flexible wall area (m^2, ft^2).

W4(R) General table number. The input argument for the table is the volume displacement on the from volume side of the component (m^3, ft^3). The function value in the table is the flexible wall stiffness (Pa/m^3, lb_f/in^2). For a solid wall, enter 0.0 for the stiffness in the table.

W5(R) From volume increment. Words 1 and 2 contain the from and to connection codes respectively for the first flexible wall defined by the set. If the set defines more than one flexible wall, connection codes for the following flexible walls are given by the connection code of the previous flexible wall plus the increments in Words 5 and 6. The increments may be positive, negative, or zero. Words 3 through 4 apply to all flexible walls defined by the set. If additional sets are entered, Words 1 and 2 apply to the next flexible wall, and increments are applied as with the first set. Word 8 for the second and following sets must be greater than Word 8 of the preceding set, and Word 8 of the last set must equal nfw. Word 8 for a set is Word 8 for the previous set plus the number of flexible walls in the current set. Thus, W8 is the running total of the numbers of flexible walls currently defined for the multiple flexible wall component. A new set is used whenever a new increment is needed, Words 3 and 4 need to be changed, or a change in flexible wall numbering is desired.

W6(I) To volume increment. See description for Word 5.

W7(I) Enter zero. This is reserved for future capability.

W8(I) Running total of the number of flexible walls. See description for Word 5.

7.13 Accumulator Component

7.13.1 Card CCC0000, Accumulator Name and Type

This card is required.

W1(A) Component name. Use a name descriptive of the component's use in system. A limit of 8 characters is allowed for most computers, e.g., work stations, CRAY, and IBM computers.

W2(A) Component type. Enter ACCUM to indicate an accumulator component or the command DELETE. The command DELETE is allowed only in RESTART problems, and the component number must be an existing component at the time of restart. The DELETE command deletes the component.

For major edits, minor edits, and plot variables, the volume in the accumulator component is numbered CCC010000, and the junction in the accumulator component is numbered CCC010000.

An accumulator is a lumped parameter component treated by special numerical techniques that model the tank, tank wall, surgeline, and outlet check valve junction until the accumulator is emptied of liquid. When the last of the liquid leaves the accumulator, the code automatically resets the accumulator to an equivalent single-volume with an outlet junction and proceeds with calculations using the normal hydrodynamic solution algorithm.

In the following input requirements, it is assumed that the component is an accumulator in which liquid completely fills the surgeline but may or may not occupy the tank. It is further assumed that the accumulator is not initially in the injection mode. Hence, the initial pressure must be input lower than the injection point pressure, including elevation head effects; and junction initial conditions may not be input (i.e., initial hydrodynamic velocities are set to zero in the code). It is further assumed that the noncondensable gas in the accumulator is nitrogen (nitrogen must be one of the noncondensable gas types specified on Card 110) and that the gas, vapor, and liquid are initially in equilibrium. No other junctions (except the accumulator junction) should be connected to the accumulator volume. The geometry of the tank may be cylindrical or spherical. The standpipe/surgeline inlet refers to the end of the pipe inside the tank itself (see Section 2.4.13).

7.13.2 Cards CCC0101 through CCC0109, Accumulator Volume Geometry

These cards are required.

W1(R) Volume flow area (m^2, ft^2). This is the flow area of a cylindrical tank, or the maximum flow area of a spherical tank. In the case of a spherical tank, the maximum flow area and the tank radius are related by the formula $A = \pi R^2$.

W2(R) Length of volume (m, ft). This is the length of the tank above the standpipe/surgeline inlet, where this inlet refers to the end of the pipe inside the tank itself.

W3(R) Volume of volume (m^3, ft^3). This is the volume of the tank above the standpipe/surgeline inlet, where this inlet refers to the end of the pipe inside the tank itself. The code requires that the volume, volume flow area, and length are consistent. For a cylindrical tank, W3 = W1•W2, and at least two of the three quantities, W1, W2 or W3, must be nonzero. If one of the quantities is zero, it will be computed from the other two. For a spherical tank, W1 and W2 must be nonzero. If W3 is zero, it will be computed from the other two. If none of

the words are zero, they must satisfy the consistency condition within a relative error $\pm$ 0.000001.

W4(R) Azimuthal (horizontal) angle (degrees). The absolute value of this angle must be $\leq$ 360 degrees and is defined as a positional quantity. This angle is in the horizontal x-y plane. The angle 0 degrees is on the x axis, and the angle 90 degrees is on the y axis. Positive angles are rotated from the x axis toward the y axis. This quantity is not used in the calculation but is specified for automated drawing of nodalization diagrams.

W5(R) Inclination (vertical) angle (degrees). Only +90 or -90 degrees is allowed. The accumulator is assumed to be a vertical tank with the standpipe/surgeline inlet (where this inlet refers to the end of the pipe inside the tank itself) at the bottom. This angle is used in the interphase drag calculation and for automated drawing of nodalization diagrams. As with other components, this angle is used to decide if the horizontal or vertical flow regime map is used. This is not important for this component, since the correlations that depend on the flow regime map are not needed for this component. The volume conditions are determined from the accumulator's special model.

W6(R) Elevation change (m, ft). This is the elevation change from the standpipe/surgeline inlet (where this inlet refers to the end of the pipe inside the tank itself) to the top of the tank. A positive value is an increase in elevation. The absolute value of this quantity must be nonzero, less than or equal to the volume length, and have the same sign as the inclination (vertical) angle. The elevation change is used in the gravity head and in checking loop closure. See Section 2.4.1 of Volume II of the manual for further discussion. A calculated elevation angle is determined by the arcsin of the ratio of the elevation change (this word) and the volume length (Word 2). This calculated elevation angle is used in the additional force term.

W7(R) Wall roughness (m, ft). The wall roughness is limited to be greater than or equal to $1.0\text{x}10^{-9}$ times the hydraulic diameter. If zero, the wall roughness is computed from $1.0\text{x}10^{-9}$ times the hydraulic diameter.

W8(R) Hydraulic diameter (m, ft). This should be computed from $4.0 \bullet \left(\frac{\text{volume flow area}}{\text{wetted perimeter}}\right)$. If zero, the hydraulic diameter of the tank is computed from $2.0 \bullet \left(\frac{\text{volume flow area}}{\pi}\right)^{0.5}$. A check is made that the pipe roughness is less than half the hydraulic diameter of the tank. See Word 1 for the volume flow area.

W9(I) Volume control flags. This word has the packed format tlpvbfe. It is not necessary to input leading zeros. Volume flags consist of scalar oriented and coordinate direction oriented flags. Only one value for a scalar oriented flag is entered per volume but up to three

coordinate oriented flags can be entered for a volume, one for each coordinate direction. At present, the f flag is the only coordinate direction oriented flag. This word enters the scalar oriented flags and the x-coordinate flag. The accumulator component forces all volume flags except for the x-coordinate f digit, and y- and z-coordinate flags are not read. The effective format is 00110f0 where 0 and 1 indicate fields as set by the accumulator component. The user must enter 0 in the digits marked with 0 and may enter 0 or 1 in the digits marked with 1.

The t digit is not used and must be set to 0. The thermal stratification model is not used for an accumulator component.

The l digit is not used and must be set to 0. The mixture level tracking model is not used for an accumulator component.

The digit p is not used and may be input as 0 or 1. The major edit will show p = 1. The water packing scheme is not used.

The digit v is not used and may be input as 0 or 1. The major edit will show v = 1. The vertical stratification model is not used.

The digit b is not used and must be input as zero. The rod bundle interphase friction model is not used.

The digit f specifies whether wall friction is to be computed; f = 0 specifies that wall friction effects are to be computed along the x-coordinate; f = 1 specifies friction effects are not to be computed along the x-coordinate.

The flag e must be specified zero, since only a nonequilibrium (unequal temperature) calculation is allowed.

W10(I) Geometry flag (optional). To specify a cylindrical tank, set the flag equal to 0 (default); to specify a spherical tank, set the flag equal to 1.

7.13.3 Card CCC0131, Accumulator Additional Wall Friction

This card is optional. If this card is not entered, the default values are 1.0 for the laminar shape factor and 0.0 for the viscosity ratio exponent. Two quantities must be entered on the card. A description of this input is presented in Section 3 of Volume I. The accumulator model automatically does not use the following words as long as liquid remains in the accumulator. However, when the accumulator empties of liquid, the model is automatically converted to an active normal volume. The following words are then used as defined.

W1(R) Shape factor.

W2(R) Viscosity ratio exponent.

7.13.4 Card CCC0141, Accumulator Alternate Turbulent Wall Friction

This card is optional. This card allows the specification of a user-defined turbulent wall friction factor. The turbulent wall friction factor has the form $f = A + B(Re)^{-C}$, where A, B, and C are entered for the accumulator volume and Re is the volume Reynolds number for the appropriate phase. If this card is not entered, the standard turbulent wall friction factor is used. If the card is entered, the standard turbulent wall friction factor can be selected by entering zeros for the three quantities. Three quantities must be entered on the card. The accumulator model automatically does not use the following words as long as liquid remains in the accumulator. However, when the accumulator empties of liquid, the model is automatically converted to an active normal volume. The following words are then used as defined.

W1(R) A.

W2(R) B.

W3(R) C.

7.13.5 Card CCC0200, Accumulator Tank Initial Thermodynamics Conditions

This card is required.

W1(R) Pressure (Pa, lb_f/in^2).

W2(R) Temperature (K, ^oF).

W3(R) Boron concentration (mass of boron per mass of liquid). This word is optional.

7.13.6 Card CCC1101, Accumulator Junction Geometry

This card is required.

W1(I) To connection code to a component. This refers to the component at which the junction coordinate direction ends. An old or an expanded format can be used to connect volumes. In the old format (only allowed for connection to 1-D components), use CCC000000 if the connection is to the inlet side of the component and use CCC010000 if the connection is to the outlet side of the component. In the expanded format, the connection code for 1-D components is CCCXX000F [where CCC is the component number, XX is the volume number (greater than 00 and less than 100) for pipes/annuli/pressurizers, XX is 01 for all other 1-D components, and F indicates the face number], and the connection code for 3-D components is CCCXYYZZF (where CCC is the component number, X is the first coordinate direction position number, YY is the second coordinate direction position

number, ZZ is the third coordinate direction position number, and F indicates the face number). A nonzero F specifies the expanded format. The number F equal to 1 and 2 specifies the inlet and outlet faces for the first coordinate direction, which is a 1-D volume's coordinate direction (see Section 2.1 of Volume II of this manual). The number F equal to 3 through 6 specifies crossflow for 1-D volumes. The number F equal to 3 and 4 would specify inlet and outlet faces for the second coordinate direction; F equal to 5 and 6 would do the same for the third coordinate direction. For connecting to a time-dependent volume using the old format, both CCC000000 and CCC010000 are allowed. For connecting to a time-dependent volume using the expanded format, only the number F equal to 1 or 2 is allowed. Section 4.4 in this Appendix discusses this further.

W2(R) Junction flow area (m^2, ft). This is the average area of the surgeline and standpipe.

W3(R) Reynolds number independent forward flow energy loss coefficient, A_F. This quantity will be used in each of the phasic momentum equations when the junction velocity of that phase is positive or zero. The interpretation and use of the coefficient depends on whether the smooth or abrupt area change option is specified or grid spacers are modeled (see Section 2.4.1 of Volume II of this manual). This quantity must be greater than or equal to zero. See Section 5.6 of Volume V for more information.

W4(R) Reynolds number independent reverse flow energy loss coefficient, A_R. This quantity will be used in each of the phasic momentum equations when the junction velocity of that phase is negative. The interpretation and use of the coefficient depends on whether the smooth or abrupt area change option is specified or grid spacers are modeled (see Section 2.4.1 of Volume II of this manual). This quantity must be greater than or equal to zero. See Section 5.6 of Volume V for more information.

W5(I) Junction control flags. This word has the packed format jefvcahs. It is not necessary to input leading zeros. The accumulator model automatically disables the following flags as long as liquid remains in the accumulator. However, when the accumulator empties of liquid, the model is automatically converted to an active normal volume. The following flags are then enabled and used as defined.

The digit j is not used and should be input as zero (j = 0). The jet junction model is not used.

The digit e is not used and should be input as zero (e = 0). The modified PV term in the energy equation is not used.

The digit f is not used and should be input as zero (f = 0). The CCFL model is not used.

The digit v is not used and should be input as zero (v = 0). The stratification entrainment/pullthrough model is not used.

The digit c specifies choking options; c = 0 specifies that the standard choking model will be applied, c = 1 specifies that neither choking model will be applied, and c = 2 specifies that the modified Henry-Fauske choking model will be applied.

The digit a specifies area change options; a = 0 specifies either a smooth area change or no area change, and a = 1 or 2 is not allowed for an accumulator.

The digit h specifies nonhomogeneous or homogeneous; h = 0 specifies the nonhomogeneous (two-velocity momentum equations) option, and h = 1 or 2 specifies the homogeneous (single-velocity momentum equation) option. For the homogeneous option (h = 1 or 2), the major edit will show h = 1.

The digit s specifies momentum flux options; s = 0 specifies momentum flux in both the to volume and the from volume, s = 1 specifies momentum flux in the from volume but not in the to volume, and s = 2 or 3 is not allowed for an accumulator.

7.13.7 Card CCC1102, Accumulator Form Loss Data

This card is optional. The user-specified form loss coefficients are given in Words 3 and 4 of Card CCC1101 if this card is not entered. If this card is entered, the form loss coefficients depend on the flow conditions and are calculated from

$$K_F = A_F + B_F Re^{-C_F}$$

$$K_R = A_R + B_R Re^{-C_R}$$

where K_F and K_R are the forward and reverse loss coefficients: A_F, A_R, B_F, B_R, C_F, and C_R are user-specified constants. A_F and A_R are Words 3 and 4 of Card CCC1101, B_F, B_R, C_F, C_R are Words 1, 2, 3, and 4 of this card (CCC1102): and Re is the junction Reynolds number based on mixture fluid properties. If this card is being used for the form loss calculations, then enter all four words for the appropriate expression. The accumulator model automatically does not use the following words as long as liquid remains in the accumulator. However, when the accumulator empties of liquid, the model is automatically converted to an active normal volume. The following words are then used as defined.

W1(R) B_F (≥ 0). This quantity must be greater than or equal to zero).

W2(R) C_F (≥ 0). This quantity must be greater than or equal to zero).

W3(R) B_R (≥ 0). This quantity must be greater than or equal to zero).

W4(R) C_R (≥ 0). This quantity must be greater than or equal to zero).

7.13.8 Card CCC2200, Accumulator Tank Initial Fill Conditions, Standpipe/Surgeline Length/Elevation, and Tank Wall Heat Transfer Terms

This card is required.

W1(R) Liquid volume in tank (m^3, ft^3). This is the volume of liquid contained in the tank above the standpipe/surgeline inlet (where this inlet refers to the end of the pipe inside the tank).

W2(R) Liquid level in tank (m, ft). This is the liquid level contained in the tank above the standpipe/surgeline inlet (where this inlet refers to the end of the pipe inside the tank) entrance. For a cylindrical tank, either W1 or W2 must be specified as nonzero. For a spherical tank, W2 must be specified as nonzero. If one of the words is zero, it is computed from the other two.

W3(R) Length of surgeline and standpipe (m, ft). If input as zero, then the surgeline and standpipe are not modeled.

W4(R) Elevation drop of surgeline and standpipe (m, ft). This is the elevation drop from the standpipe/surgeline inlet (where this inlet refers to the end of the pipe inside the tank) entrance to the injection point. A positive number denotes a decrease in elevation.

W5(R) Tank wall thickness (m, ft). This is not allowed to be zero.

W6(I) Heat transfer flag. If zero, heat transfer will be calculated. If one, no heat transfer will be calculated.

W7(R) Tank density (kg/m^3, lb_m/ft^3). If zero, the density will default to that for carbon steel.

W8(R) Tank specific heat capacity ($J/kg \cdot K$, $Btu/lb_m \cdot {}^oF$). If zero, the specific heat capacity will default to that for carbon steel.

W9(I) Trip number. If zero or if no number is input, then no trip test is performed. If nonzero then this must be a valid trip number, the operations performed are similar to those performed for a trip valve. If the trip is false, then the accumulator is isolated and no flow through the junction can occur. If the trip is true, then the accumulator is not isolated and flow through the junction will occur in the normal manner for an accumulator.

7.14 Multi-Dimensional Component

7.14.1 Card CCC0000, Multi-Dimensional Name and Type

This card is required.

W1(A) Component name. Use a name descriptive of the component's use in system. A limit of 8 characters is allowed for most computers, e.g., work stations, CRAY, and IBM computers.

W2(A) Component type. Enter MULTID to indicate a multi-dimensional component or the command DELETE. The command DELETE is allowed only in RESTART problems, and the component number must be an existing component at the time of restart. The DELETE command deletes the component.

This component defines a one-, two-, or three-dimensional array of volumes and the internal junctions connecting the volumes. The multi-dimensional component is described as a three-dimensional component but can be reduced to two or one dimensions by defining only one interval in the appropriate coordinate directions. The geometry can be either Cartesian (x,y,z) or cylindrical (r,θ,z). In cylindrical geometry, the r-direction can start at zero or nonzero, and θ can cover 360 degrees (i.e., a full circle) or can cover less than 360 degrees (wedge shape, semicircle, etc.).

An orthogonal, three-dimensional grid is defined by mesh interval input data in each of the three coordinate directions. The edges of the hydrodynamic volumes are defined by the grid lines. Given nx intervals in the x- or r-coordinate direction, ny intervals in the y- or θ-coordinate direction, and nz intervals in the z-coordinate direction, $nx \bullet ny \bullet nz$ volumes are defined. The number of volumes in a three-dimensional component is limited to 88,209 volumes. Volumes are numbered CCCXYYZZ0 where X, YY, and ZZ are the position numbers in the three coordinate directions. Position numbers in each coordinate direction start with one at the origin and increase consecutively in the positive coordinate direction. X represents the position number for the first coordinate direction which is x in Cartesian geometry and r in cylindrical geometry. The use of one digit for the first coordinate limits the number of volumes in that coordinate to nine volumes. YY represents the position number of the second coordinate direction which is y in Cartesian geometry and θ in cylindrical geometry. ZZ represents the position number of the third coordinate which is z in both Cartesian and cylindrical geometries. The use of two digits for the second and third directions allows up to 99 volumes in those coordinate directions. The maximum values of X, YY, and ZZ are nx, ny, and nz respectively. Positive θ direction is counterclockwise. The r-θ plane is in the same plane as the x-y plane.

The volume face number is given by CCCXYYZZF where the face number, F, is added to the volume number. The face numbers are 1 and 2 for the inlet and outlet faces respectively of the x- or r-coordinate, 3 and 4 for the inlet and outlet faces for the y- or θ-coordinate, and 5 and 6 for the inlet and outlet faces for the z-coordinate. The volume-face number is the volume connection code used in the <u>from</u> and <u>to</u> portion of junction input.

Junctions for this component are generated between all internal faces, that is all faces common to the volumes in the component. The number of junctions is $(nx - 1) \bullet ny \bullet nz + nx \bullet (ny - 1) \bullet nz + nx \bullet ny \bullet (nz - 1)$ for Cartesian geometry and for cylindrical geometry where the θ-coordinate does not cover a full circle. When the θ coordinate covers 360 degrees, the number of junctions increases by $nx \bullet nz$. The coordinate directions of the junctions are aligned in the

positive directions of the coordinates. For numbering purposes, the junctions are associated with the from face of the two volumes being joined. Thus, the junctions are numbered CCCXYYZZF where F is limited to 2, 4, or 6.

External junctions may connect to any exterior faces of the volumes and also any interior faces. External junctions connecting to internal faces imply branching or merging flow since internal junctions connect all internal faces. Some adjustments to the volumes and flow areas of the volumes and flow areas of the junctions should be made to account for the piping necessary to reach the internal face. The 3-D (MULTID) component can be connected to 1-D components externally via either a normal junction or a crossflow junction, depending on the actual flow paths. The 1-D to 3-D external junction connection to an external 3-D face should be restricted to 1 junction for each external 3-D face. The 3-D (MULTID) component can also be connected to 3-D components externally via either a normal junction or a crossflow junction. The 3-D to 3-D connection is restricted to the same direction (i.e., radial to radial, axial to axial, etc.).

User guidelines for the MULTID component are discussed in Volume II, Section 2.4 and Volume V, Section 4.6.

7.14.2 Card CCC0001, Multi-Dimensional Information

This card is required.

W1(I) Number of x- or r-coordinate intervals (nx). This word is required. This word must be greater than 0 and less than 10.

W2(I) Number of y- or θ-coordinate intervals (ny). This word is required. This word must be greater than 0 and less than 100.

W3(I) Number of z-coordinate intervals (nz). This word is required. This word must be greater than 0 and less than 100.

W4(I) Velocity/mass flow rate control. This word is optional and if missing, is assumed to be 0. The initial junction conditions are velocities if 0 is entered and are mass flow rates if one is entered.

W5(I) Geometry and θ flag. This word is optional and if missing, is assumed to be 0. If this word is zero, Cartesian geometry is indicated; if the magnitude of this word is one, cylindrical geometry is indicated. If the sign of this word is positive, θ is assumed to extend to 360 degrees; if the sign of the word is negative, θ is assumed to extend to less than 360 degrees. Input checking uses 360 $\pm$ 0.0005 degrees for the region that represents 360 degrees. The extra plane of internal junctions perpendicular to the θ direction exists when this quantity is one and does not exist when this quantity is zero or minus one. The sign is appropriate only to cylindrical geometry.

W6(R) Value of innermost radial coordinate (m, ft). This word is optional and if missing, is assumed to be 0.0. This word must be zero in Cartesian geometry, and it must be greater than or equal to zero in cylindrical geometry. A nonzero value allows the specification of a cylinder with a hollow center in cylindrical geometry. This word is not used in Cartesian geometry.

W7(I) Three-dimensional flag. This word is optional and if missing, is assumed to be 0. If this word is zero, the three-dimensional momentum equations are used. If this word is one, the normal one-dimensional momentum equations are used on each of the coordinate directions. If this word is two, the three-dimensional momentum equations are used, and all the liquid is in the film (i.e., no drops) when in the annular mist flow regime (this option allows the multi-dimensional component to model a downcomer). If this word is three, the normal one-dimensional momentum equations are used on each of the coordinate directions, and all the liquid is in the film (i.e., no drops) when in the annular mist flow regime. This option allows the multi-dimensional component to model a downcomer. Momentum flux off options (junction flag s = 1, 2, or 3) may not be used if this word is zero or two but may be used if this word is one or three.

7.14.3 Card CCC0002, Multi-Dimensional Rotation Angle Data

This card is optional and if missing, the angles for W1, W2, and W3 are assumed to be zero and W4 is assumed to be EULER.

W1(R) First rotation angle (degrees).

W2(R) Second rotation angle (degrees).

W3(R) Third rotation angle (degrees).

W4(A) Angles option. Enter EULER for Euler angles and PYR for pitch-yaw-roll angles. This option indicates whether W1, W2, and W3 are Euler or pitch-yaw-roll angles. If this word is missing, Euler angles are assumed.

The three rotational angles used in the MULTID component (Euler angles option and pitch-yaw-roll angles option), are commonly used to describe the position of a rigid body in space. The reference coordinates are the standard right hand x-, y-, z-coordinate system in Cartesian geometry (see Volume II, Section 2.1, **Figures 2.1-4** and **2.1-5**). For default rotational angles (W1 = 0.0, W2 = 0.0, W3 = 0.0), the z-axes of both Cartesian and cylindrical geometries coincide and are oriented in the vertical direction with the positive direction being upward. For default rotational angles (W1 = 0.0, W2 = 0.0, W3 = 0.0), the x-, y-, r- and θ-coordinates are in the horizontal plane with the θ = 0 line coinciding with the x-axis. The coordinate system of the multi-dimensional component is initially aligned with the coordinates implied by the default rotational angles. For the Euler angles, the first rotational angle (W1) specifies the rotation of the component's coordinate system about its original z-axis, the second rotational angle (W2) is the

rotation of the component's coordinate system about its new x-axis, and the third rotational angle (W3) is the rotation of the component's coordinate system about its new z-axis. For the pitch-yaw-roll angles, the pitch angle (W1) specifies the rotation of the component's coordinate about its original y-axis, the yaw angle (W2) is the rotation of the component's coordinate system about its new z-axis, and the roll angle (W3) is the rotation of the component's coordinate system about its new x-axis. A positive angle specifies counterclockwise rotation as viewed by an observer on the positive part of the rotation axis looking towards the origin. In a 90 degree counterclockwise rotation about the z-axis, the position of the x-axis would be moved to the previous position of the y-axis. Similarly, in a 90 degree counterclockwise rotation about the x-axis, the position of the y-axis would be moved to the previous position of the z-axis. The input range of each Euler angle and each pitch-yaw-roll angle is from 0.0 through plus or minus 360 degrees.

The three rotational multi-dimensional are related to the angles used in other components such as a pipe or single volume. In a pipe component (which uses spherical angles) or single volume component, the first angle (azimuthal, horizontal) specified the rotation of a volume in the horizontal plane, the second angle (inclination, vertical) specified the rotation of a volume in the vertical plane, and the third angle is not used. The first angle of a pipe or single volume, whose absolute value has to be less than or equal to 360 degrees, is not used in the calculation, but is specified for automated drawing of nodalization diagrams. The second angle of a pipe or single volume, whose absolute value has to be less than or equal to 90 degrees, is used in the flow regime determination, in the interphase drag calculation, and for automated drawing of nodalization diagrams. The effects of the first and second spherical angles of a pipe or single volume component and the first, second, and third Euler and pitch-yaw-roll angles of the multi-dimensional component are similar, except that the first spherical angle is not used in the calculation and the second spherical angle is limited to $|90|$ degrees for the pipe and single volume component.

For a vertical pipe component with an upward direction, the first angle is 0 degrees (when automated drawing of nodalization diagrams is not used), and the second angle must be +90 degrees. For a similar multi-dimensional component with an upward z-axis with either Euler angles or pitch-yaw-roll angles, the first, second, and third rotational angles are all 0 degrees (when automated drawing of nodalization diagrams is not used).

For a vertical pipe component with a downward direction, the first angle is 0 degrees (when automated drawing of nodalization diagrams is not used), and the second angle must be -90 degrees. For a similar multi-dimensional component with a downward z-axis with Euler angles, the first rotational angle is 0 degrees, the second rotational angle is 180 degrees, and the third rotational angle is 0 degrees. For a similar multi-dimensional component with a downward z-axis with pitch-yaw-roll angles, the first rotational angle is 180 degrees, the second rotational angle is 0 degrees, and the third rotational angle is 0 degrees.

An example of usage of the Euler angle data is to move the local axial coordinate in cylindrical geometry from the vertical direction to the horizontal plane. The following input accomplishes that: W1 = 0.0, W2 = 90.0, W3 = 0.0. If the azimuthal noding consisted of six 60 degree mesh intervals, two of the azimuthal grid lines would coincide with the vertical direction. If the third angle was specified as plus or minus 30 degrees, the center of two of the azimuthal intervals would lie on a vertical line.

An example of usage of the pitch-yaw-roll data is to move the local axial coordinate in cylindrical geometry from the vertical direction to the horizontal plane. The following input accomplishes that: W1 = 0.0, W2 = 0.0, W3 = 90.0.

7.14.4 Cards CCC0XNN, Multi-Dimensional Mesh Interval

These required cards enter the mesh interval data for the three coordinate directions. The digit X is 1 for x- or r-coordinate, 2 for y- or θ-coordinate, and 3 for z-coordinate. The NN digits, which may range from 01 through 99, sequence the cards within a series and need not be consecutive. One or more sets of data in sequential expansion format may be entered on each card.

W1(R) Mesh interval (m, ft, or degrees).

W2(I) Volume coordinate number. The number of the first volume coordinate number next to the origin is 1 and the last volume number is nx for x-coordinate, ny for y-coordinate, or nz for z-coordinate. The last volume coordinate number must equal nx, ny, or nz depending on the value of X.

In cylindrical geometry, the θ coordinates are entered in degrees. The sum of the intervals cannot exceed 360 degrees. The sum must equal 360 degrees if W5 on Card CCC0001 is 1 and must not equal 360 degrees if W5 is -1. Input checking uses 360 ± 0.0005 degrees for the region that represents 360 degrees.

Presently a further restriction exists on the θ intervals when the innermost radius is zero. Then, the number of θ intervals must be even and the size of the interval must have 180 degree symmetry.

7.14.5 Cards CCC1NNN, Multi-Dimensional Volume Data and Control Flags

These cards are optional. The NNN digits range from 001 through 999 and need not be consecutive.

These cards use an overlay format. The first six words define a rectangular solid in Cartesian geometry and an annular segment in cylindrical geometry. The solid consists of volumes where the x- or r-coordinate number ranges from x1 through x2, the y- or θ-coordinate number ranges from y1 through y2, and the z-coordinate number ranges from z1 through z2.

The quantities following the six overlay numbers apply to the volumes within the solid defined by the overlay. Overlays may reference any volume more than once; the data used in a volume is the information in the last overlay referencing that volume. Default data is stored in volumes not referenced by an overlay.

At least 11 words must be entered on these cards and 16 words (if more that 11 words are entered) may be entered. Words 12 through 16 enter individual noncondensable mass fraction data. If Words 12 through 16 are omitted, the noncondensable mass fractions are obtained from the noncondensable mass

fractions entered on Card 115. Continuation cards can be used to enter the large number of words for this card number.

W1(I) x1.

W2(I) x2.

W3(I) y1.

W4(I) y2.

W5(I) z1.

W6(I) z2.

W7(R) Volume factor. Default is 1.0. This quantity must be greater than zero and less than or equal to one. The original volume of each volume is computed from the mesh interval data. The actual volume's volume may be reduced by the factor in this word to account for solid material such as fuel pins within the volume. It could also account for piping which accesses interior volumes. The volume flow areas for the three coordinate directions are computed from the actual volume divided by the volume's length along the coordinate direction. The length is the appropriate mesh interval except for the θ direction where it is the mesh interval times the radius to the midpoint of the volume.

W8(I) Scalar volume control flag. This word has the general packed format tlpvbfe but this word is limited to tlpvb0e. It is not necessary to input leading zeros. This word applies to the scalar oriented options for a volume.

W9(I) X- or r-coordinate volume control flag. This word has the general packed format tlpvbfe but this word is limited to 00000f0. It is not necessary to input leading zeros. This word applies to the coordinate options.

W10(I) Y- or θ-coordinate volume control flag. This word has the general packed format tlpvbfe but this word is limited to 00000f0. It is not necessary to input leading zeros. This word applies to the coordinate options.

W11(I) Z-coordinate volume control flag. This word has the general packed format tlpvbfe but this word is limited to 00000f0. It is not necessary to input leading zeros. This word applies to the coordinate options.

The digit t specifies whether the thermal stratification model is to be used; t = 0 specifies that the thermal stratification model is not to be used for the volume, and t = 1 specifies

that the thermal stratification model is to be used for the volume. The thermal stratification model can only be applied to vertically oriented components.

The digit l specifies whether the mixture level tracking model is to be used; l = 0 specifies that the mixture level tracking model not be used for the volume, and l = 1 specifies that the mixture level tracking model be used for the volume. The mixture level tracking model can only be applied to vertically oriented components.

The digit p specifies whether the water packing scheme is to be used; p = 0 specifies that the water packing scheme is to be used for the volume, and p = 1 specifies that the water packing scheme is not to be used for the volume. The water packing scheme is only applied to vertically oriented volumes.

The digit v specifies whether the vertical stratification model is to be used; v = 0 specifies that the vertical stratification model is to be used, and v = 1 specifies that the vertical stratification model is not to be used. The vertical stratification model is only applied to vertically oriented volumes.

The digit b specifies the interphase friction to be used; b = 0 specifies that the pipe interphase friction model will be applied, and b = 1 specifies that the rod bundle interphase friction model will be applied. The b = 1 option is only applied to vertically oriented volumes.

The digit f specifies whether wall friction is to be computed; f = 0 specifies that wall friction effects are to be computed for the volume, and f = 1 specifies that wall friction effects are not to be computed.

The digit e specifies if nonequilibrium or equilibrium is to be used; e = 0 specifies that a nonequilibrium (unequal temperature) calculation is to be used, and e = 1 specifies that an equilibrium (equal temperature) calculation is to be used. Equilibrium volumes should not be connected to nonequilibrium volumes. The equilibrium option is provided only for comparison to other codes.

W12-W16(R) Mass fractions for the noncondensable species entered on Card 110. Five quantities must be entered, and zeros should be entered for species not present in the volumes. The noncondensable mass fractions must sum to 1.0 within a relative error of 1.0×10^{-10}.

7.14.6 Cards CCC2NNN, Multi-Dimensional Volume Friction Data

These cards are optional. The NNN digits range from 001 through 999 and need not be consecutive. These cards use an overlay format similar to the CCC1NNN cards described above. Not all volumes need to be referenced by the overlay. At least 12 words must be entered on these cards, and 18 or 27 words may be entered. Words 13 through 18 enter additional wall friction data which specify laminar wall friction

shape factors and wall friction factor heated wall effect viscosity ratio exponents. A description of this input is presented in Section 3 of Volume I. Words 19 through 27 specify data for an alternate turbulent wall friction factor model. The alternate turbulent wall friction data allow the specification of user-defined turbulent wall friction factors for selected volumes and coordinate directions (see Volume I, Section 3.3.8.6). The user-defined turbulent wall friction factor has the form $f = A + B(Re)^{-C}$ where A, B, and C are entered for each coordinate and Re is the volume Reynolds number for the appropriate coordinate and appropriate phase. The standard turbulent wall friction model can be specified for a particular volume and coordinate by entering zeros for the three values. Continuation cards can be used to enter the large number of words for this card number.

W1(I) x1.

W2(I) x2.

W3(I) y1.

W4(I) y2.

W5(I) z1.

W6(I) z2.

W7(R) Wall roughness for the x- or r-coordinate (m, ft). Default value is zero. The x- or r-coordinate wall roughness is limited to be greater than or equal to 1.0×10^{-9} times the x- or r-coordinate hydraulic diameter. If zero, the x- or r-coordinate wall roughness is computed from 1.0×10^{-9} times the x- or r-coordinate hydraulic diameter.

W8(R) Hydraulic diameter for the x- or r-coordinate (m, ft). Default value is zero. If zero, the hydraulic diameter is computed from four times the total flow area in that direction divided by the associated wetted perimeter. The flow area and wetted perimeter are appropriate for the geometry and the coordinate direction. This represents the default for a tank.

W9(R) Wall roughness for the y- or θ-coordinate (m, ft). Default value is zero. The y- or θ-coordinate wall roughness is limited to be greater than or equal to 1.0×10^{-9} times the y- or θ-coordinate hydraulic diameter. If zero, the y- or θ-coordinate wall roughness is computed from 1.0×10^{-9} times the y- or θ-coordinate hydraulic diameter.

W10(R) Hydraulic diameter for the y- or θ-coordinate (m, ft). Default value is zero. If zero, the hydraulic diameter is computed from four times the total flow area in that direction divided by the associated wetted perimeter. The flow area and wetted perimeter are

appropriate for the geometry and the coordinate direction. This represents the default for a tank.

W11(R) Wall roughness for the z-coordinate (m, ft). Default value is zero. The z-coordinate wall roughness is limited to be greater than or equal to 1.0×10^{-9} times the z-coordinate hydraulic diameter. If zero, the z-coordinate wall roughness is computed from 1.0×10^{-9} times the z-coordinate hydraulic diameter.

W12(R) Hydraulic diameter for the z-coordinate (m, ft). Default value is zero. If zero, the hydraulic diameter is computed from four times the total flow area in that direction divided by the associated wetted perimeter. The flow area and wetted perimeter are appropriate for the geometry and the coordinate direction. This represents the default for a tank.

W13(R) Wall friction shape factor for the x- or r-coordinate. Default value is 1.0.

W14(R) Wall friction factor heated wall effect viscosity ratio exponent for the x- or r-coordinate. Default value is 0.0.

W15(R) Wall friction shape factor for the y- or θ-coordinate. Default value is 1.0.

W16(R) Wall friction factor heated wall effect viscosity ratio exponent for the y- or θ-coordinate. Default value is 0.0.

W17(R) Wall friction shape factor for the z-coordinate. Default value is 1.0.

W18(R) Wall friction factor heated wall effect viscosity ratio exponent for the z-coordinate. Default value is 0.0.

W19(R) A for the x- or r-coordinate. Default value is zero.

W20(R) B for the x- or r-coordinate. Default value is zero.

W21(R) C for the x- or r-coordinate. Default value is zero.

W22(R) A for the y- or θ-coordinate. Default value is zero.

W23(R) B for the y- or θ-coordinate. Default value is zero.

W24(R) C for the y- or θ-coordinate. Default value is zero.

W25(R) A for the z-coordinate. Default value is zero.

W26(R) B for the z-coordinate. Default value is zero.

W27(R) C for the z-coordinate. Default value is zero.

7.14.7 Cards CCC3001 through CCC5999, Multi-Dimensional Junction Data and Control Flags

These cards are optional. The range of card numbers need not be consecutive.

These cards use the first six words as overlay information (see the CCC1NNN cards described above) to specify a range of volumes and in addition use a seventh number to specify the volume face. The information following the face number is applied to the junction originating from the specified face of each volume included in the overlay. Not all junctions need to be referenced by these cards.

W1(I) x1.

W2(I) x2.

W3(I) y1.

W4(I) y2.

W5(I) z1.

W6(I) z2.

W7(I) Face number. The face number is limited to 2, 4, or 6.

W8(R) Junction area factor. Default value is one. This quantity must be greater than or equal to zero and less than or equal to one. The original junction area is computed from the mesh interval data. The actual area is the original area times this factor. This quantity can be used to account for solid structures within the volume. A totally blocked internal 3-D junction (i.e., the junction area factor is zero) is treated as a time-dependent junction with no flow. If all the internal 3-D junctions associated with a 3-D volume are blocked (i.e., all the junction area factors are zero), then that 3-D volume is removed from the solution procedure for the problem (i.e., it is treated as a time dependent volume with fixed conditions).

W9(R) Reynolds number independent forward flow energy loss coefficient, A_F. Default value is zero. This quantity will be used in each of the phasic momentum equations when the junction velocity of that phase is positive or zero. The interpretation and use of the coefficient depends on whether the smooth or abrupt area change option is specified or grid spacers are modeled (see Section 2.4-1 of Volume II of this manual). This quantity must be greater than or equal to zero. See Section 5.6 of Volume V for more information.

W10(R) Reynolds number independent reverse flow energy loss coefficient, A_R. Default value is zero. This quantity will be used in each of the phasic momentum equations when the junction velocity of that phase is negative. The interpretation and use of the coefficient depends on whether the smooth or abrupt area change option is specified or grid spacers are modeled (see Section 2.4-1of Volume II of this manual). This quantity must be greater than or equal to zero. See Section 5.6 of Volume V for more information.

W11(I) Junction control flags. This word has the packed format jefvcahs. It is not necessary to input leading zeros.

The digit j is not used and should be input as zero (j = 0). The jet junction model is not used.

The digit e is not used and should be input as zero (e = 0). The modified PV term in the energy equations is not used.

The digit f is not used and should be input as zero (f = 0). The CCFL model is not used.

The digit v specifies stratification entrainment/pullthrough options; v = 0 specifies the model is not applied, v = 1 specifies an upward-oriented junction (offtake volume must be vertical), v = 2 specifies a downward-oriented junction (offtake volume must be vertical), and v = 3 specifies a centrally (side) located junction. For v = 1 or 2, the horizontal volume flow area must be greater than or equal to the offtake volume flow area.

The digit c specifies choking options; c = 0 specifies that the standard choking model will be applied, c = 1 specifies that neither choking model will be applied, and c = 2 specifies that the modified Henry-Fauske choking model will be applied.

The digit a specifies area change options (see Volume II, Section 2.4.1 and Volume V, Section 4.6.3); a = 0 specifies either a smooth area change or no area change, a = 1 specifies the full abrupt area change model, (code-calculated K_{loss}, area apportioning at a branch, restricted junction area, and extra interphase drag), and a = 2 specifies the partial abrupt area change model (no code-calculated K_{loss}, but includes area apportioning at branch, restricted junction area, and extra interphase drag). It is recommended that the abrupt area change model (a = 1 or a = 2) be used at branches.

The digit h specifies nonhomogeneous or homogeneous; h = 0 specifies the nonhomogeneous (two-velocity momentum equations) option, and h = 1 or 2 specifies the homogeneous (single-velocity momentum equation) option. For the homogeneous option (h = 1 or 2), the major edit printout will show a 1.

The digit s specifies momentum flux option; s = 0 specifies momentum flux in both the to and from volume, s = 1 specifies momentum flux in the from volume but not in the to

volume, s = 2 specifies momentum flux in the to volume but not in the from volume, and s = 3 specifies no momentum flux in either the to volume or the from volume. Momentum flux off options (s = 1, 2, or 3) may not be used if Word 7 of Card CCC0001 is zero or two but may be used if the word is one or three.

W12(R) Junction hydraulic diameter (m, ft). This word is optional. Default value is zero. If zero is entered, hydraulic diameter is set to four times the total junction area in that direction divided by the associated wetted perimeter. This represents the default for a tank.

7.14.8 Cards CCC6NNN, Multi-Dimensional Volume Initial Condition

These cards are required. The NNN digits range from 001 through 999 and need not be consecutive.

These cards use the first six words as overlay information (see the CCC1NNN cards described above) to specify the range of volumes for which the following initial condition information applies. Each volume must be referenced at least once by these cards.

W1(I) x1.

W2(I) x2.

W3(I) y1.

W4(I) y2.

W5(I) z1.

W6(I) z2.

W7(I) Control word. This word has the packed format εbt. It is not necessary to input leading zeros.

The digit ε specifies the fluid, where ε = 0 is the default fluid. The value for ε > 0 corresponds to the position number of the fluid type indicated on the 120 - 129 cards (i.e., ε = 1 specifies H_2O, ε = 2 specifies D_2O, etc.). The default fluid is that set for the hydrodynamic system by Cards 120 through 129 or this control word in another volume in this hydrodynamic system. The fluid type set on Cards 120 through 129 or these control words must be consistent (i.e., not specify different fluids). If Cards 120 through 129 are not entered and all control words use the default ε = 0, then H_2O is assumed as the fluid.

The digit b specifies whether boron is present or not. The digit b = 0 specifies that the volume liquid does not contain boron; b = 1 specifies that a boron concentration in mass of

boron per mass of liquid (which may be zero) is being entered after the other required thermodynamic information.

The digit t specifies how the following words are to be used to determine the initial thermodynamic state. Entering t equal to 0 through 3 specifies only one component (vapor/liquid). Entering t equal to 4, 5, 6, or 8 allows the specification of two components (vapor/liquid and noncondensable gas).

With options t equal to 4, 5, 6, or 8, the names of components of the noncondensable gas must be entered on Card 110, and the mass fractions of the components of the noncondensable gas are entered on Card 115 (if more than 1 noncondensable component is specified on Card 110). Cards CCC1NNN may also be used for the mass fractions of the components of the noncondensable gas.

If t = 0, the next four words are interpreted as pressure (Pa, lb_f/in^2), liquid specific internal energy (J/kg, Btu/lb_m), vapor/gas specific internal energy (J/kg, Btu/lb_m), and vapor/gas void fraction; these quantities will be interpreted as nonequilibrium or equilibrium conditions depending on the specific internal energies used to define the thermodynamic state. Enter only the minimum number of words required. If entered, boron concentration (mass of boron per mass of liquid) follows the last required word for thermodynamic conditions.

If t = 1, the next two words are interpreted as temperature (K, ^oF) and static quality in equilibrium condition. Enter only the minimum number of words required. If entered, boron concentration (mass of boron per mass of liquid) follows the last required word for thermodynamic conditions.

If t = 2, the next two words are interpreted as pressure (Pa, lb_f/in^2) and static quality in equilibrium condition. Enter only the minimum number of words required. If entered, boron concentration (mass of boron per mass of liquid) follows the last required word for thermodynamic conditions.

If t = 3, the next two words are interpreted as pressure (Pa, lb_f/in^2) and temperature (K, ^oF) in nonequilibrium or equilibrium conditions depending on the pressure and temperature used to define the thermodynamic state. Enter only the minimum number of words required. If entered, boron concentration (mass of boron per mass of liquid) follows the last required word for thermodynamic conditions.

The following options are used for input of noncondensable states. In all cases, the criteria used for determining the range of values for static quality are;

1. 1.0E-9 $\leq$ static quality $\leq$ 0.99999999, two phase conditions

2. static quality < 1.0E9 or static quality > 0.99999999, single phase conditions.

The static quality is given by $M_g / (M_g + M_f)$, where $M_g = M_s + M_n$. Section 3.2 of Volume I of the manual discusses this further.

Noncondensable options are:

If t = 4, the next three words are interpreted as pressure (Pa, lb_f/in^2), temperature (K ^oF), and static quality in equilibrium condition. Using this input option with static quality > 0.0 and ≤ 1.0, saturated noncondensables (100% relative humidity) will result. The temperature is restricted to be less than the saturation temperature at the input pressure and less than the critical temperature; otherwise, an input error will occur. Setting static quality to 0.0 is used as a flag that will initialize the volume to all noncondensable (dry noncondensable, 0% relative humidity) with no temperature restrictions. Static quality is reset to 1.0 using this dry noncondensable option. Enter only the minimum number of words required. If entered, boron concentration (mass of boron per mass of liquid) follows the last required word for thermodynamic conditions.

If t = 5, the next three words are interpreted as temperature (K, ^oF), static quality, and noncondensable quality in equilibrium condition. Both the static and noncondensable qualities are restricted to be between 1.0E-9 and 0.99999999. Enter only the minimum number of words required. If entered, boron concentration (mass of boron per mass of liquid) follows the last required word for thermodynamic conditions. Little experience has been obtained using this option, and it has not been checked out.

If t = 6, the next five words are interpreted as pressure (Pa, lb_f/in^2), liquid specific internal energy (J/kg, Btu/lb_m), vapor/gas specific internal energy (J/kg, Btu/lb_m), vapor/gas void fraction, and noncondensable quality. These quantities will be interpreted as nonequilibrium or equilibrium conditions depending on the specific internal energies used to define the thermodynamic state. This option can be used to set the relative humidity to less than or equal to 100%. The combinations of vapor/gas void fraction and noncondensable quality must be thermodynamically consistent. If the noncondensable quality is set to 0.0, noncondensables are not present and the input processing branches to that type of processing (t = 0). For this situation, Card 110 must be entered, and Card 115 must be entered if more than 1 noncondensable component is specified on Card 110. If noncondensables are present (noncondensable quality greater than 0.0), then the vapor/gas void fraction must also be greater than 0.0. If the noncondensable quality is set to 1.0 (pure noncondensable, 0% relative humidity), then the vapor/gas void fraction must also be 1.0. When both the vapor/gas void fraction and the noncondensable quality are set to 1.0, the volume temperature is calculated from the noncondensable energy equation using the input vapor/gas specific internal energy. Enter only the minimum number of words

required. If entered, boron concentration (mass of boron per mass of liquid) follows the last required word for thermodynamic conditions.

If t = 8, the next five words are interpreted as pressure (Pa, lb_f/in^2), liquid temperature (K ^oF), vapor/gas temperature (K ^oF), vapor/gas void fraction, and noncondensable quality. These quantities will be interpreted as nonequilibrium or equilibrium conditions depending on the temperatures used to define the thermodynamic state. This option can be used to set the relative humidity to less than or equal to 100%. The combinations of vapor/gas void fraction and noncondensable quality must be thermodynamically consistent. If the noncondensable quality is set to 0.0, noncondensables are not present and the input processing branches to that type of processing. For this situation, Card 110 must be entered, and Card 115 must be entered if more than 1 noncondensable component is specified on Card 110. If noncondensables are present (noncondensable quality greater than 0.0), then the vapor/gas void fraction must also be greater than 0.0. If the noncondensable quality is set to 1.0 (pure noncondensable, 0% relative humidity), then the vapor/gas void fraction must also be 1.0. When both the vapor/gas void fraction and the noncondensable quality are set to 1.0, the volume specific internal energy is calculated from the noncondensable energy equation using the input vapor/gas temperature. Enter only the minimum number of words required. If entered, boron concentration (mass of boron per mass of liquid) follows the last required word for thermodynamic conditions.

W8-W13(R) Quantities described under Word 7 (W7). Depending on the control word, two through five thermodynamic quantities may be required. Enter only the minimum required. If entered, boron concentration (mass of boron per mass of liquid) follows the last required word for thermodynamic conditions.

7.14.9 Cards CCC7001 through CCC9999, Multi-Dimensional Junction Initial Condition Data

These cards are required. The range of card numbers need not be consecutive. These cards use the first six words as overlay information (see the CCC1NNN cards described above) to specify a range of volumes and in addition use a seventh number to specify the volume face. The information following the face number is applied to the junction originating from the specified face of each volume included in the overlay. All junctions must be referenced at least once by these cards.

W1(I) x1.

W2(I) x2.

W3(I) y1.

W4(I) y2.

W5(I) z1.

W6(I) z2.

W7(I) Face number. The face number is limited to 2, 4, or 6.

W8(R) Initial liquid velocity or initial liquid mass flow rate (m/s, ft/s or kg/s, lb_m/s), depending on control Word 4 of Card CCC0001.

W9(R) Initial vapor/gas velocity or initial vapor/gas mass flow rate (m/s, ft/s or kg/s, lb_m/s), depending on control Word 4 of Card CCC0001.

7.15 PVM Coupling Junction Component

7.15.1 Card CCC0000, PVM Coupling Junction Name and Type

This card is required.

W1(A) Component name. Use a name descriptive of the component's use in system. A limit of 8 characters is allowed for most computers, e.g., work stations, CRAY, and IBM computers.

W2(A) Component type. Enter PVMCJ to indicate a PVM coupling junction component or the command DELETE. The command DELETE is allowed only in RESTART problems, and the component number must be an existing component at the time of restart. The DELETE command deletes the component.

For major edits, minor edits, and plot variables, the junction in the PVM coupling junction component is numbered CCC000000.

7.15.2 Cards CCC0101 through CCC0109, PVM Coupling Junction Geometry

This card (or cards) is required for PVM coupling junction components.

W1(I) To connection code to a component. This refers to the component to which the junction coordinate direction originates. An old or an expanded format can be used to connect volumes. In the old format (only allowed for connection to 1-D components), use CCC000000 if the connection is to the inlet side of the component and use CCC010000 if the connection is to the outlet side of the component. In the expanded format, the connection code for 1-D components is CCCXX000F [where CCC is the component number, XX is the volume number (greater than 00 and less than 100) for 1-D pipes/annuli/pressurizers, XX is 01 for all other 1-D components, and F indicates the face number], and the connection code for 3-D components is CCCXYYZZF [where CCC is the component number, X is the first coordinate direction (x or r) position number, YY is

the second coordinate direction (y or θ) position number, ZZ is the third coordinate direction (z) position number, and F indicates the face number]. A nonzero F specifies the expanded format. The number F equal to 1 and 2 specifies the inlet and outlet faces for the first coordinate direction (x or r), which is a 1-D volume's coordinate direction (x) (see Section 2.1 of Volume II of this manual). The number F equal to 3 through 6 specifies crossflow (y or z) for 1-D volumes. The number F equal to 3 and 4 would specify inlet and outlet faces for the second coordinate direction (y or θ); F equal to 5 and 6 would do the same for the third coordinate direction (z). For connecting to a time-dependent volume using the old format, both CCC000000 and CCC010000 are allowed. For connecting to a time-dependent volume using the expanded format, only the number F equal to 1 or 2 is allowed. Section 4.4 in this Appendix discusses this further.

W2(R) Junction flow area (m^2, ft^2). If zero, the junction flow area is set to the volume flow area of the to volume. For abrupt area changes, the junction flow area must be equal to or smaller than the minimum of the adjoining volume flow areas. For smooth area changes, there are no restrictions.

W3(I) Junction control flags. This word has the packed format jefvcahs. It is not necessary to input leading zeros.

The digit j is not used and should be input as zero (j = 0). The jet junction model is not used.

The digit e specifies the modified PV term in the energy equations; e = 0 specifies that the modified PV term will not be applied, and e = 1 specifies that the modified PV term will be applied.

The digit f is not used and should be input as zero (f = 0). The CCFL model is not used.

The digit v specifies stratification entrainment/pullthrough options, where this model is for junctions connected to a horizontal or vertical volume; v = 0 specifies the model is not applied, v = 1 specifies an upward-oriented junction to a horizontal volume (offtake volume must be vertical), v = 2 specifies a downward-oriented junction to a horizontal volume (offtake volume must be vertical), and v = 3 specifies a centrally (side) located junction to a horizontal or vertical volume. For v = 1 or 2, the horizontal volume flow area must be greater than or equal to the offtake volume flow area.

The digit c specifies choking options; c = 0 is not allowed for a PVM coupling junction, c = 1 specifies that neither choking model will be applied, and c = 2 is not allowed for a PVM coupling junction. c = 1 must be entered.

The digit a specifies area change options (see Volume II, Section 2.4.1 and Volume V, Section 4.6.3); a = 0 specifies either a smooth area change or no area change, a = 1

specifies the full abrupt area change model (code-calculated K_{loss}, area apportioning at a branch, restricted junction area, and extra interphase drag), and a = 2 specifies the partial abrupt area change model (no code-calculated K_{loss}, but includes area apportioning at a branch, restricted junction area, and extra interphase drag). It is recommended that the abrupt area change model (a = 1 or a = 2) be used at branches.

The digit h is not used and should be input as zero (h = 0). The homogeneous model is not used.

The digit s is not used and should be input as zero (s = 0). The momentum flux option is not used.

8 Cards 1CCCGXNN, Heat Structure Input

These cards are used in NEW and RESTART type problems and are required only if heat structures are described. The heat structure card numbers are divided into fields, where

CCC is a heat structure identifier. The heat structure identifiers need not be consecutive. It is suggested, but it is not required, that if heat structures and hydrodynamic volumes are related, they be given the same CCC identifier.

G is a geometry number. The combination CCCG is a heat structure geometry combination referenced in the heat structure input data. The combination CCCG is the heat structure geometry number (heat structure geometry numbers need not be consecutive). The G digit is provided to differentiate between different types of heat structures (such as fuel pins and core barrel) that might be associated with the same hydrodynamic volume.

X is the card type.

NN is the card number within a card type.

This is discussed further in Volume I, Section 4; Volume II, Section 3; Volume IV, Sections 9.1, 9.2, 9.3; and Volume V, Section 4.7.

8.1 Card 1CCCG000, General Heat Structure Data

CCCG is a heat structure geometry number. This card is required for heat structures. Use eight words for new data input or one word for deleting a heat structure.

8.1.1 General Heat Structure Data

W1(I) Number of axial heat structures with this heat structure geometry (CCCG), nh. This number must be > 0 and < 100.

W2(I) Number of radial mesh points for this heat structure geometry (CCCG), np. This number must be < 100. Enter > 1 if no reflood/two-dimensional conduction is specified, and > 2 if reflood/two-dimensional conduction or metal water reaction is specified.

W3(I) Geometry type. Enter 1 or -1 for rectangular, 2 or -2 for cylindrical, and 3 or -3 for spherical. A positive value indicates the heat structure geometry is coupled to the hydrodynamic components. A negative value indicates that the heat structure geometry is decoupled from hydrodynamic components. Decoupling means that the heat structure geometry responds to the hydraulic conditions in the hydrodynamic volumes to which it is attached, but the energy removed from (or added to) the surface of the heat structure

geometry by convection is not added to (or removed from) the hydrodynamic volumes. Decoupling is useful for the CSAU methodology and for debugging. Spherical geometry is not allowed if reflood/two-dimensional conduction is specified. Cylindrical geometry must be specified when the gap conductance model is used.

W4(I) Steady-state initialization flag. Use zero if the desired initial condition temperatures are entered on input Cards 1CCCG401 through 1CCCG499; use one if the steady-state initial condition temperatures are to be calculated by the code. If option one is chosen, the user is still required to enter temperatures on Cards 1CCCG401 through 1CCCG499. In this case, the temperatures are used as starting points for the steady-state solutions. The user should therefore enter temperatures either below or above the minimum film boiling point to assure the respective pre-DNB or post-DNB steady-state condition is calculated. This is because the boiling curve is multi-valued.

W5(R) Left boundary coordinate (m, ft). The left boundary coordinate must be less than the right boundary coordinate because the mesh intervals must be positive. This is discussed further in Section 3.1 of Volume II of the manual.

W6(I) Reflood condition/two-dimensional conduction flag. This quantity is optional if no reflood calculation and/or no two-dimensional conduction is to be performed. This quantity may be 0, 1, 2, 3, or a trip number.

If this quantity is zero, no reflood calculation and/or no two-dimensional conduction is to be performed.

If this quantity is nonzero and not equal to 3, a reflood calculation is to be performed and all the heat structures in this heat structure geometry are assumed to form a two-dimensional representation of the heat structure geometry. The radial mesh is defined on Card 1CCCG1NN. Each heat structure represents an axial level of the heat structure geometry, with the first heat structure being the bottom level. Each heat structure must be connected to a hydrodynamic volume, and it should represent the same axial section of the coolant channel. If a time-dependent volume is connected to a heat structure that uses the one-dimensional heat conduction solution (this is always non-reflood), a warning message is printed out indicating that the time-dependent volume is an infinite energy sink. If a time-dependent volume is connected to a heat structure that uses the two-dimensional heat conduction solution (non-reflood or reflood), this is an input error and an error message is printed out. The length of the axial mesh in the heat structure geometry is given by the length of the connected hydrodynamic volume. If the heat structures represent fuel pins or heat exchanger tubes, the length factor (Word 5 on Cards 1CCCG501 through 1CCCG599 and Cards 1CCCG601 through 1CCCG699) is the product of the hydrodynamic volume length and the number of fuel pins or tubes (see Volume II, Section 3.2). The heat structures represent the temperatures at the midpoint of the axial mesh. Once the reflood calculation is initiated, additional mesh lines are introduced at each end of the heat

structure geometry and between the heat structures. Once the reflood calculation is initiated, it remains activated, and the two-dimensional heat conduction calculation uses a minimum of $2 \bullet nh + 1$ axial mesh nodes. Additional mesh lines are introduced and later eliminated as needed to follow the quench front. If 1 is entered, the reflood calculation is initiated in this heat structure geometry when the average pressure in the connected hydrodynamic volumes is less than 1.2×10^6 Pa (174.045288 lb_f/in^2 if British input is used), and the average void fraction in the interconnected hydrodynamic volumes is greater than 0.9 (i.e., nearly empty). If 2 is entered, the reflood calculation is initiated in this heat structure geometry when the average pressure in the connected hydrodynamic volumes is less than 1.2×10^6 Pa (174.045288 lb_f/in^2 if British input is used) and the average void fraction in the interconnected hydrodynamic volumes is greater than 0.1 (i.e., dryout begins). If a trip number is entered, the reflood calculation is initiated when the trip is set true. When using the expanded trip number format, 1 and 2 are possible trip numbers. A 1 or 2 entered in this word is not treated as a trip number.

If this quantity is 3, all the heat structures in this heat structure/geometry are assumed to form a two-dimensional representation of the heat structure, however no reflood calculation is performed. The radial mesh is defined on Card 1CCCG101. Each heat structure in the heat structure geometry represents an axial level of the heat structure, with the first heat structure being the bottom level. Each heat structure must be connected to a hydrodynamic volume, and it should represent the same axial section of the coolant channel. If a time-dependent volume is connected to a heat structure that uses the one-dimensional heat conduction solution (this is always non-reflood), a warning message is printed out indicating that the time-dependent volume is an infinite energy sink. If a time-dependent volume is connected to a heat structure that uses the two-dimensional heat conduction solution (non-reflood or reflood), this is an input error and an error message is printed out. The length of the axial mesh in the heat structure is given by the length of the connected hydrodynamic volume. If the heat structure is fuel pins or heat exchanger tubes, the length factor (Word 5 on Cards 1CCCG501 through 1CCCG599 and Cards 1CCCG601 through 1CCCG699) is the product of the hydrodynamic volume length and the number of pins or tubes (see Volume II, Section 3.2). The heat structures represent the temperatures at the midpoint of the axial mesh. A fixed axial fine mesh is used with two axial fine mesh per heat structure. To accomplish this, additional mesh lines are introduced at each end of the heat structure geometry and between the heat structures. The two-dimensional conduction solution is initiated at the beginning of the transient. A 3 entered in this word is not treated as a trip number.

W7(I) Boundary volume indicator. This word is only used if a reflood calculation is to be performed (Word 6 is 1, 2, or a trip number). This word is optional if no reflood calculation is to be performed. Enter 0 or 1 to indicate that reflood heat transfer applies to the left or right boundary, respectively.

W8(I) Maximum number of axial intervals per heat structure. This word is only used if a reflood calculation is to be performed (Word 6 is 1, 2, or a trip number). For a two-dimensional calculation without reflood (Word 6 is 3), the code sets the maximum number of axial intervals per heat structure to 2. This word is optional if no reflood calculation is to be performed. Enter 2, 4, 8, 16, 32, 64, or 128 to indicate the maximum number of axial subdivisions a heat structure can have. Storage is allocated for the number indicated, even though a transient may not require that level of subdivision. Recommendations are discussed in Volume II, Section 3.6.

8.1.2 Heat Structure Delete

This card is entered only for RESTART problems. If entered, all heat structures associated with the heat structure geometry number CCCG are deleted. The heat structures may be renodalized for RESTART problems (by the addition of a new heat structure, by the deletion of an existing heat structure, or by the change of an existing heat structure) if the radiation/conduction enclosure model has been used in the original run.

W1(A) Enter DELETE.

8.2 Card 1CCCG001, Gap Conductance Model Initial Gap Pressure Data

CCCG is a heat structure geometry number. This card is needed only if the gap conductance model is to be used. If the card is entered, Word 3 of Card 1CCCG000 must be 2 or -2 (i.e., cylindrical geometry), Cards 1CCCG011 through 1CCCG099 are required, Word 1 of Card 1CCCG100 must be zero, and Cards 1CCCG201 through 1CCCG299 are required. Word 2 of Card 201MMM00 must be 3, and a table of the gas component name and mole fraction must be specified in the gap material data (Cards 201MMM01 through 201MMM49). In addition, the right boundary condition Cards 1CCCG601 through 1CCCG699 must have a hydrodynamic volume specified in Word 1. The gap conductance model assumes the radius input is for “room temperature” conditions.

Only one gap is allowed with only one material allowed on each side of the gap (represents fuel and cladding). In addition, a gap is only allowed in cylindrical geometry.

W1(R) Initial gap internal pressure (Pa, lb_f/in^2). This word is required.

W2(I) Gap conductance reference volume. This word is required. The pressure of the gas in a fuel pin for the gap conductance model is given by $P(t) = [P(0)/T(0)] \bullet T(t)$, where t is time, P(t) is the pressure in the fuel pin at time t, and T(t) is the temperature in the reference volume at time t. P(0) is Word 1 above, and T(0) is the initial value, if the volume is also being defined with these input data or the value from the restart block. The reference volume is usually the hydrodynamic volume [i.e., the nine-digit number

CCCXX0000 (for 1-D volumes) or CCCXYYZZ0 (for 3-D volumes)] most closely associated with the nonfuel region in a fuel pin at the top of a stack of fuel pellets.

8.3 Card 1CCCG003, Metal-Water Reaction Control

CCCG is a heat structure geometry number. If this card is not present, no metal-water reaction will be calculated. If this card is present, the gap conductance Cards 1CCCG001 and Cards 1CCCG011 through 1CCCG099 must also be present to calculate the inner surface oxide thickness in the event of cladding rupture for cylindrical heat structures. The initial oxide thickness is assumed to be zero on the inner surface, and it remains zero unless cladding rupture occurs (cladding deformation Card 1CCCG004 is needed for cladding rupture). The heat structure must have at least three mesh points to use the metal-water reaction model.

W1(R) Initial oxide thickness on cladding's outer surface (m, ft).

W2(R) Cladding material density (kg/m^3). This quantity is optional, if not entered or 0.0 the default value for zirconium (6,500 kg/m^3) is used.

W3(R) Activation Energy (cal/mole). This quantity is optional, if not entered or 0.0 the default value for the Cathcart model (35,890 cal/mole) is used.

W4(R) Reaction rate constant (variable K) (m^2/s). This quantity is optional, if not entered or 0.0 the default value for the Cathcart model (2.252 x 10^{-6} m^2/s) is used.

W5(R) Reaction heat release (J/kg-mole). This quantity is optional, if not entered or 0.0 the default value for the zirconium-steam reaction (5.94 x 10^8 J/kg-mole) is used.

W6(R) Cladding material molecular weight (kg/kg-mole). This quantity is optional, if not entered or 0.0 the default value for zirconium (91.22 kg/kg-mole) is used.

W7(R) Molecular weight of reaction product divided by Word 6. This quantity is optional, if not entered or 0.0 the default value for the zirconium-steam reaction (0.0442) is used.

W8(R) Initial oxide thickness on cladding's inner surface (m, ft). This quantity is optional for rectangular heat structures and may not be entered for cylindrical or spherical structures. This word must be entered to activate the calculation of the oxide thickness on the inner surface of a rectangular heat structure.

8.4 Card 1CCCG004, Fuel Cladding Deformation Model Control

CCCG is a heat structure geometry number. If this card is not present, no cladding deformation calculations will be done. If this card is present, then gap conductance Card 1CCCG001 and Cards 1CCCG011 through 1CCCG099 must also be present.

W1(I) Form loss factor flag. Enter 0 if no additional form loss factors are to be calculated after a rod ruptures. Enter 1 if additional form loss factors are to be calculated. Either a 0 or a 1 must be entered.

8.5 Cards 1CCCG011 through 1CCCG099, Gap Deformation Data

CCCG is a heat structure geometry number. These cards are required for the gap conductance model only. If these cards are present, then gap conductance Card 1CCCG001 must also be present. The card format is sequential format, five words per set, describing nh heat structures. The gap conductance model assumes the radius input is for "room temperature" conditions.

W1(R) Fuel surface roughness (m, ft). This number must be $\geq$ 0. An appropriate value is 1.0 x 10^{-6} m (or 3.280839895 x 10^{-6} ft if British input is used). A negative entry is reset to 1.0 x 10^{-6} m (or 3.280839895 x 10^{-6} ft if British input is used) with no errors.

W2(R) Cladding surface roughness (m, ft). This number must be either positive or zero. An appropriate value is 2 x 10^{-6} m (or 6.561679790 x 10^{-6} ft if British input is used). A negative entry is reset to 2 x 10^{-6} m (or 6.561679790 x 10^{-6} ft if British input is used) with no errors.

W3(R) Radial displacement due to fission gas-induced fuel swelling and densification (m, ft). This number must be $\geq$ 0. A negative entry is reset to zero. An appropriate value can be obtained from calculations using FRAPCON-2 or FRAP-T6.

W4(R) Radial displacement due to cladding creepdown (m, ft). The value is normally negative. A positive entry is reset to zero. An appropriate value can be obtained from calculations using FRAPCON-2 or FRAP-T6.

W5(I) Heat structure number.

8.6 Card 1CCCG100, Heat Structure Mesh Flags

CCCG is a heat structure geometry number. This card is required for heat structure input. Mesh point locations can be specified either by giving their coordinates or the length of mesh intervals. This leads to 2 formats. See Volume V, Section 4.7.2 for more information.

W1(I) Mesh location flag. If zero, the mesh format flag, mesh interval data (radial), composition data (radial), and source distribution data (radial) are entered with this heat structure input. If nonzero, this information is taken from the heat structure geometry (CCCG) with this number. If this word is nonzero, the remaining information described in Section 8.7 through Section 8.9 is not entered.

W2(I) Mesh format flag. This word is needed only if Word 1 is zero, though no error occurs if it is present when Word 1 is nonzero. The mesh interval data are given as a sequence of pairs of numbers in one of two formats to be used in Cards 1CCCG101 through 1CCCG199. If this word is 1 (Format 1 on Cards 1CCCG101 through 1CCCG199), the pairs of numbers contain the number of intervals in this region and the right boundary coordinate in this region. The distance of each interval in this region is the same. For the first pair, the left coordinate of the region is the left boundary coordinate previously entered in Word 5 of Card 1CCCG000; for succeeding pairs, the left coordinate is the right coordinate of the previous pair. For the last pair, the right coordinate in this region is the right boundary coordinate for the complete heat structure geometry. If this word is 2 (Format 2 on Cards 1CCCG101 through 1CCCG199), the format is a sequential expansion of mesh intervals; i.e., the distance in Word 1 on Cards 1CCCG101 through 1CCCG199 is used for each interval starting from the leftmost, as yet unspecified, interval to and including the interval number specified in Word 2.

8.7 Cards 1CCCG101 through 1CCCG199, Heat Structure Mesh Point Location Data (Radial)

CCCG is a heat structure geometry number. These cards are required if Word 1 of Card 1CCCG100 is zero. In Format 1 (Word 2 of Card 1CCCG100 is 1), the sum of the numbers of intervals must be np-1. In Format 2 (Word 2 of Card 1CCCG100 is 2), the sequential expansion must be for np-1 intervals. The term np is the number of radial mesh points. The card numbers need not be sequential.

8.7.1 Format 1 (Word 2 of Card 1CCCG100 is 1)

W1(I) Number of intervals. Enter the number of intervals, not the interval number.

W2(R) Right coordinate (m, ft).

8.7.2 Format 2 (Word 2 of Card 1CCCG100 is 2)

W1(R) Mesh interval distance (m, ft).

W2(I) Interval number.

8.8 Cards 1CCCG201 through 1CCCG299, Heat Structure Composition Data (Radial)

CCCG is a heat structure geometry number. These cards are required if Word 1 of Card 1CCCG100 is zero and must not be entered otherwise. The card format is two numbers per set in sequential expansion format for np-1 intervals. The card numbers need not be in sequential order.

W1(I) Composition number. The absolute value of this quantity is the composition number, and it must be identical to the subfield MMM used in Heat Structure Thermal Property Data,

Section 10, Cards 201MMMNN. The user may select built-in thermal properties or supply a table/function. The sign indicates whether the region over which this composition is applied is to be included or excluded from the heat structure volume averaged temperature computation. If positive, the region is included; if negative, the region is not included. The option to exclude regions from the volume averaged temperature integration is to limit the integration to fuel regions only for use in reactivity feedback calculations. Gap and cladding regions should not be included in this case. If the gap conductance model is used, only one interval can be used for the gap model.

W2(I) Interval number.

8.9 Cards 1CCCG301 through 1CCCG399, Heat Structure Source Distribution Data (Radial)

CCCG is a heat structure geometry number. These cards are required if Word 1 of Card 1CCCG100 is zero and must not be entered otherwise. The card format is two numbers per set in sequential expansion format for np-1 intervals. The card numbers need not be in sequential order. Radial power peaking factors are entered here for the internal volumetric heat source (See Section 3.1 of this volume of the manual).

W1(R) Source value $Q_{i,input}$. These are relative values only and can be scaled by any non-zero factor without changing the results (See Volume II, Section 3.1). By entering different values for the various mesh intervals, a characteristic shape of a power curve can be described. If all the source variables are zero, there will be no internal heat generation for the heat structure geometry.

W2(I) Mesh interval number.

8.10 Card 1CCCG400, Initial Temperature Flag

CCCG is a heat structure geometry number. This card is optional; if missing, Word 1 is assumed to be zero.

W1(I) Initial temperature flag. If this word is zero or -1, initial temperatures are entered with the input data for this heat structure geometry using Cards 1CCCG401 through 1CCCG499. If greater than zero, initial temperatures for this heat structure geometry are taken from the heat structure geometry number in this word, and the initial temperature distribution from Cards 1CCCG401 through 1CCCG499 is not needed.

8.11 Cards 1CCCG401 through 1CCCG499, Initial Temperature Data

CCCG is a heat structure geometry number. These cards are required if Word 1 of Card 1CCCG400 is zero or -1.

8.11.1 Format 1 (Word 1 on Card 1CCCG400 = 0)

If Word 1 of Card 1CCCG400 is zero, one temperature distribution is entered; and the same distribution is applied to all of the nh heat structures. The card format is two numbers per set in sequential expansion format for np mesh points.

W1(R) Temperature (K, ^{o}F).

W2(I) Mesh point number.

8.11.2 Format 2 (Word 1 on Card 1CCCG400 = -1)

If Word 1 of Card 1CCCG400 is -1, a separate temperature distribution must be entered for each of the nh heat structures. The distribution for the first heat structure is entered on Card 1CCCG401, the distribution for the second heat structure is entered on Card 1CCCG402, and the remaining distributions are entered on consecutive card numbers. Continuation cards can be used if the data do not fit on one card.

W1-WNP(R) Temperature (K, ^{o}F). Enter the np mesh point temperatures in order from left to right.

8.12 Cards 1CCCG501 through 1CCCG599, Left Boundary Condition

CCCG is a heat structure geometry number. These cards are required. The boundary condition data for the heat structures with this geometry are entered in a slightly modified form of sequential expansion using six quantities per set for the number of heat structures with this geometry (nh sets). The modification deals with Words 1 and 2.

The left boundary condition cards may specify the fluid volumes to which the heat structure is connected and the heat transfer surface areas. In addition, these cards allow the user to implement, using a table or control variable, an absolute boundary condition such as a surface temperature, surface heat flux, or heat transfer coefficient. See Section 4.1 of Volume I of the manual for a discussion of the boundary condition equation. See Section 3.2 of Volume II of the manual for a table and discussion that summarizes the various boundary condition types (Word 3) that are possible for the several Word 1 options. See Section 4.7.3 of Volume V of the manual for a discussion of the various boundary conditions.

W1(I) Boundary condition (i.e., sink temperature) definition, which can be described by a boundary volume indicator, a general table temperature, a control variable that calculates the temperature, or the number zero. The sink temperature is discussed in Volume I, Section 4.1 of the manual. The use of interactive variables to calculate the temperature is not allowed.

If a **volume number** is input for Word 1, this word specifies the hydrodynamic volume indicator {of the form CCCXX000F for 1-D components [CCC is the component number and XX is the volume number (greater than 00 and less than 100) for 1-D

pipes/annuli/pressurizers, XX is 01 for all other 1-D components] and CCCXYYZZF for 3-D components [CCC is the component number, X is the first coordinate direction (x or r) position number, YY is the second coordinate direction (y or θ) position number, and ZZ is the third coordinate direction (z) position number]}. A boundary volume indicator is entered as a positive number. If F is 0 or 4, the volume coordinate associated values used in the wall heat transfer correlations, such as the phasic velocities (used in the mass flux) and the volume hydraulic diameter [used in the heat transfer hydraulic diameter (heated equivalent diameter)] are taken from the first coordinate direction (x for 1-D volumes, x or r for 3-D volumes); if F is 2, the volume coordinate associated values used in the wall heat transfer correlations are taken from the second coordinate direction (y for 1-D volumes, y or θ for 3-D volumes); if F is 1, the volume coordinate associated values used in the wall heat transfer correlations are taken from the third coordinate direction (z for 1-D volumes, z for 3-D volumes). Specifying a volume coordinate not in use (no junctions attached to either volume face in the coordinate direction) is an input error. The user should note that the values of F used here are different than the values of F used in the volume minor edit/plot requests (Section 4.4, Appendix A, Volume II) and the connection codes for junction components (Section 2.1, Volume II and Section 7, Appendix A, Volume II).

If a **general table** is input for Word 1, it must be of the type TEMP (temperature versus time). A general table is entered as a negative number (-1 through -999), where the table number is the absolute value of Word 1.

If a **control variable** is input for Word 1, it is entered as a negative number (-10001 through -19999), where the control variable is the absolute value of Word 1 minus 10000.

If the **number zero** is input for Word 1, a non-convective boundary condition [radiation/conduction heat flux boundary condition or a symmetry/insulated boundary condition (i.e., a zero temperature gradient at the boundary)] is used if Word 3 is zero; a temperature of zero is used for a surface temperature in the boundary conditions (also a temperature of zero is used for a sink temperature in the boundary conditions) is used if Word 3 is 1000; and a temperature of zero is used for a sink temperature in the boundary conditions if Word 3 is 1xxx, 2xxx, 3xxx, or 4xxx.

W2(I) Increment. This word and Word 1 of this card are treated differently from the standard sequential expansion. Word 1 of the first set applies to the first heat structure of the heat structure geometry set. The increment (normally 10000 for a one-dimensional boundary volume and normally 10 for a multi-dimensional boundary volume) is added to Word 1, which results in the hydraulic volume number associated with heat structure 2; etc. The increment is applied up to the limit in Word 6 of a set. Word 1 of the next set applies to the next heat structure, and increments are applied as for the first set. The increment may be zero or nonzero, positive or negative. If Word 1 is zero or negative, this word should be zero. Additional examples are shown in Section 4 of Volume V.

W3(I) Boundary condition type. See Section 3.2 of Volume II of the manual for a table that summarizes the various boundary condition types (Word 3) that are possible for the various Word 1 options. A radiation/conduction enclosure heat flux may be included on any surface. A surface having a specified temperature or specified heat flux boundary condition may be included in a radiation/conduction enclosure but the surface heat flux computed by the radiation/conduction enclosure model will not affect the temperature distribution in the heat structure.

If 0, a non-convective boundary condition is used (a radiation/conduction enclosure heat flux boundary condition or a symmetry/insulated boundary condition). If the surface is included in a radiation/conduction enclosure, the heat flux on the surface in computed by that model. If the surface is not included in a radiation/conduction enclosure, a symmetry or insulated boundary surface is assumed and a zero flux boundary condition is used (i.e., a zero temperature gradient is used at the boundary). The boundary volume number (Word 1) must be 0.

If 1 or 1nn, a convective boundary condition where the total wall heat transfer coefficient obtained from Wall Heat Transfer Package 1 is used. The allowed values of 1nn are shown in **Table 8.12-1**. Volumes I and IV discuss the partitioning and the sink temperature used for this option. Word 1 must specify a boundary volume number with this boundary condition type. Generally, the hydrodynamic volume will not be a time dependent volume. Caution should be used in specifying a time dependent volume, since the elevation and length are set to zero, and the velocities in an isolated time dependent volume will be zero. Note that the current version of the code does not allow an isolated standard volume or an isolated time dependent volume. If reflood is specified, the boundary condition type must be the same for all nh heat structures.

There are several numbers allowed for Word 3 to activate convective boundary conditions for nonstandard geometries. A 1, 100, or 101 give the default values. The numbers 1, 100, and 101 use the same correlations. The number 101 is recommended; the numbers 1 and 100 are allowed so that the code is backwards compatible with previous input decks. The default convection, boiling, and condensation correlations were derived mainly based on data from internal vertical pipe flow. Other possible input values are shown in **Table 8.12-1**. When modeling a vertical bundle, the rod or tube pitch-to-diameter ratio should be input on the 1CCCG801 through 1CCCG899 or 1CCCG901 through 1CCCG999 Cards. This has the effect of increasing the convective part of wall heat transfer such that users can input the true heat transfer hydraulic diameter and get reasonable predictions.

Table 8.12-1 Cards 1CCCG501 through 1CCCG599 and 1CCCG601 through 1CCCG699, Word 3, convection boundary type.

Word 3	Geometry Type
1, 100, 101	Default

Table 8.12-1 Cards 1CCCG501 through 1CCCG599 and 1CCCG601 through 1CCCG699, Word 3, convection boundary type.

Word 3	Geometry Type
102	Vertical parallel plates [ORNL, ANS reactor; set pitch (gap) and span on CCC3101 through CCC3199 hydro cards for pipes and CCC0111 hydro card for single volumes and branches, set b = 2 in volume control flag on CCC1001 through CCC1099 hydro cards for pipes and CCC0101 through CCC0109 hydro cards for single volumes and branches]
110	Vertical bundle without crossflow (set P/D on 1CCCG901 through 1CCCG999 heat slab cards)
111	Vertical bundle with crossflow (set P/D on 1CCCG901 through 1CCCG999 heat slab cards)
115	Swirl tubes
130	Flat plate above fluid
134	Horizontal bundle
151	Vertical aluminum annulus (SRL)
153	Nusselt/Chato - Vierow-Schrock (UCB) for condensation
160	Gnielinski for forced convection in a tube
161	Bishop for forced convection in a tube
162	Koshizuka-Oka for forced convection in a tube
163	Jackson for forced convection in a tube
164	Jackson for forced/mixed convection in a tube (upflow)
165	Jackson for forced/mixed convection in a tube (downflow)

If 1000, the volume fraction averaged temperature of the boundary volume (as specified in Word 1) [i.e., void fraction (α_g) times vapor/gas temperature (T_g) plus liquid fraction (α_f) times liquid temperature (T_f)] is used as the left surface temperature if a boundary volume is present. The temperature from the general table or control variable (as specified in Word 1) is used as the left surface temperature if a boundary volume is not present. If Word 1 is zero, the left surface temperature is set to zero. This option is not allowed for reflood or two-dimensional conduction. This option is generally used to support efforts to analyze experimental data and does not contain all the physics present in the boundary condition option (1 or 1nn) that uses the wall heat transfer correlations.

If 1xxx, the temperature as a function of time from general table xxx is used as the left surface temperature. The general table xxx input in Word 3 must be of the type TEMP

(temperature versus time). This option is not allowed for reflood or two-dimensional conduction. This option is generally used to support efforts to analyze experimental data and does not contain all the physics present in the boundary condition option (1 or 1nn) that uses the wall heat transfer correlations.

If 2xxx, the wall heat flux as a function of time from general table xxx is used as the left boundary condition. The general table xxx input in Word 3 must be of the type HTRNRATE (heat flux versus time). This option is not allowed for reflood or two-dimensional conduction. A positive wall heat flux represents heat flow out of the heat structure. The partitioning for this option, when a boundary volume is present, is that the wall-to-vapor/gas wall heat flux is given by the void fraction (α_g) times the table total wall heat flux and the wall-to-liquid wall heat flux is given by the liquid volume fraction (α_f) times the table total wall heat flux. The partitioning for this option, when a boundary volume is not present, is that the wall-to-vapor/gas wall heat flux is given by half the table total wall heat flux and the wall-to-liquid wall heat flux is given by half the table total wall heat flux. This option is generally used to support efforts to analyze experimental data and does not contain all the physics present in the boundary condition option (1 or 1nn) that uses the wall heat transfer correlations. The user needs to use caution when using the wall heat flux boundary condition. If the heat flux is too large (positive or negative), a numerical failure may result.

If -2xxxx, the wall heat flux as a function of time from control variable xxxx is used as the left boundary condition. This option is not allowed for reflood or two-dimensional conduction. A positive wall heat flux represents heat flow out of the heat structure. The partitioning for this option, when a boundary volume is present, is that the wall-to-vapor/gas wall heat flux is given by the void fraction (α_g) times the table total wall heat flux and the wall-to-liquid wall heat flux is given by the liquid volume fraction (α_f) times the table total wall heat flux. The partitioning for this option, when a boundary volume is not present, is that the wall-to-vapor/gas wall heat flux is given by half the table total wall heat flux and the wall-to-liquid wall heat flux is given by half the table total wall heat flux. This option is generally used to support efforts to analyze experimental data and does not contain all the physics present in the boundary condition option (1 or 1nn) that uses the wall heat transfer correlations. The user needs to use caution when using the wall heat flux boundary condition. If the heat flux is too large (positive or negative), a numerical failure may result.

If 3xxx, the wall heat transfer coefficient as a function of time from general table xxx is used as the left boundary condition. The general table xxx input in Word 3 must be of the type HTC-T (heat transfer coefficient versus time). This option is not allowed for reflood when a boundary volume is not present or for two-dimensional conduction. The partitioning for this option, when a boundary volume is present, is that the wall-to-vapor/gas wall heat transfer coefficient is given by the void fraction (α_g) times the

table total wall heat transfer coefficient and the wall-to-liquid wall heat transfer coefficient is given by the liquid volume fraction (α_f) times the table total wall heat transfer coefficient. When a boundary volume is present, the sink temperature is the volume fraction averaged fluid temperature of the boundary volume [i.e., void fraction (α_g) times vapor/gas temperature (T_g) plus liquid fraction (α_f) times liquid temperature (T_f)]. The partitioning for this option, when a boundary volume is not present, is that the wall-to-vapor/gas wall heat transfer coefficient is given by half the table total wall heat transfer coefficient and the wall-to-liquid wall heat transfer coefficient is given by half the table total wall heat transfer coefficient. When a boundary volume is not present, the sink temperature is from the general table or control variable (as specified in Word 1) or set to zero if Word 1 is zero. This option is generally used to support efforts to analyze experimental data and does not contain all the physics present in the boundary condition option (1 or 1nn) that uses the wall heat transfer correlations.

If 4xxx, the wall heat transfer coefficient as a function of surface temperature from general table xxx is used as the left boundary condition. The general table xxx input in Word 3 must be of type HTC-TEMP (heat transfer coefficient versus temperature). This option is not allowed for reflood when a boundary volume is not present or for two-dimensional conduction. The partitioning for this option, when a boundary volume is present, is that the wall-to-vapor/gas wall heat transfer coefficient is given by the void fraction (α_g) times the table total wall heat transfer coefficient and the wall-to-liquid wall heat transfer coefficient is given by the liquid volume fraction (α_f) times the table total wall heat transfer coefficient. When a boundary volume is present, the sink temperature is the volume fraction averaged fluid temperature of the boundary volume [i.e., void fraction (α_g) times vapor/gas temperature (T_g) plus liquid fraction (α_f) times liquid temperature (T_f)]. The partitioning for this option, when a boundary volume is not present, is that the wall-to-vapor/gas wall heat transfer coefficient is given by half the table total wall heat transfer coefficient and the wall-to-liquid wall heat transfer coefficient is given by half the table total wall heat transfer coefficient. When a boundary volume is not present, the sink temperature is from the general table or control variable (as specified in Word 1) or set to zero if Word 1 is zero. This option is generally used to support efforts to analyze experimental data and does not contain all the physics present in the boundary condition option (1 or 1nn) that uses the wall heat transfer correlations.

If 5xxx, the alternate heat structure - fluid coupling model is activated for the surface and a convective boundary condition is used where the wall heat transfer coefficient is obtained from Heat Transfer Package 1. This option is not allowed for reflood when a boundary volume is not present or for two-dimensional conduction. The allowed values of xxx are 001 and 1nn where values of 1nn are shown in **Table 8.12-1**. It is the users responsibility to ensure that the restrictions for the alternate heat structure - fluid coupling model are satisfied for the volume to which the heat structure is attached.

W4(I) Surface area code. If zero, Word 5 is the left surface area. If one, Word 5 is (a) the surface area in rectangular geometry, (b) the cylinder length or equivalent in cylindrical geometry, or (c) multiplier factor which is a fraction of a sphere (0.5 is a hemisphere) in spherical geometry.

W5(R) Surface area, length, or multiplicative factor. For Word 4 equal to zero, this word specifies surface area for any geometry. For Word 4 equal to one, this word specifies surface area for rectangular geometry (m^2, ft^2), length for cylindrical geometry (m, ft), or multiplicative factor for spherical geometry (dimensionless). For the meaning of length for cylindrical geometry, see Volume II, Section 3.2. The left and right surface areas (or factors) must be consistent. This is discussed in Volume II, Section 3.2. If the symmetry boundary condition is specified (Word 3 = 0), the left and right surface areas (or factors) must still be consistent.

W6(I) Heat structure number.

8.13 Cards 1CCCG601 through 1CCCG699, Right Boundary Condition

CCCG is a heat structure geometry number. These cards are required. These cards are the same as Cards 1CCCG501 through 1CCCG599, except for the right boundary. The left and right surface areas must be compatible with the geometry. NOTE: Boundary condition type for a feedwater heater component heat structure should be specified as a horizontal bundle (Word 3 = 134) (see Volume IV, Section 4.2.20.7).

8.14 Cards 1CCCG701 through 1CCCG799, Source Data

CCCG is a heat structure geometry number. These cards are required for heat structure data. The card format is sequential expansion format, five words per set, describing nh heat structures.

W1(I) Power source type. The power is the variable P(t) and is discussed in Volume II, Sections 3.1 and 3.3. If zero, no source is used. If a positive number is less than 1000, power from the general table with this number is used as the source. If 1000 through 1004, the number has the form 100t, and the source is taken from a point kinetics calculation. The field t = 0 specifies total reactor power (fission power, fission product decay power, and actinide decay power), t = 1 specifies total decay (fission product and actinide) power, t = 2 specifies fission power, t = 3 specifies fission product decay power, and t = 4 specifies actinide decay power. If 10001 through 19999, the source is the control variable whose number is this quantity minus 10000. If 100010 through 199994, the number has the form 1zzzzt, and the source is taken from a nodal reactor kinetics calculation. The field zzzz is the zone number for nodal reactor kinetics. The zone number specified must be in use in the nodal kinetics model. The field t = 0 specifies total reactor power (fission power, fission product decay power, and actinide decay power), t = 1 specifies total decay (fission product and actinide) power, t = 2 specifies fission power, t = 3 specifies fission product decay power, and t = 4 specifies actinide decay power. If this instance of RELAP5-3D is

serving as the client process in PVM kinetics coupling, the point kinetics power data or nodal kinetics zone power data specified on this card are received from the server process of the PVM kinetics coupling rather than being computed locally.

W2(R) Internal source multiplier, P_f. This value is multiplied by the power in the power source specified in Word 1 to obtain the power generated in the heat structure. This factor is not a relative factor (See Volume II, Sections 3.1 and 3.3).

W3(R) Direct moderator heating multiplier for left boundary volume, P_{dl}. This value is multiplied by the power in the power source specified in Word 1 to obtain the power deposited directly into the left boundary volume (see Volume II, Section 3.3).

W4(R) Direct moderator heating multiplier for right boundary volume, P_{dr}. This value is multiplied by the power in the power source specified in Word 1 to obtain the power deposited directly into the right boundary volume (see Volume II, Section 3.3).

W5(I) Heat structure number.

8.15 Card 1CCCG800, Additional Left Boundary Option

W1(I) CCCG is a heat structure geometry number. If this card is not entered or if this word is zero, the nine-word format is used on Cards 1CCCG801 through 1CCCG899. If this word is 1, the twelve-word format is used on the cards. If this word is 2, the thirteen-word format is used on the cards (needed for the PG-CHF correlation). If this word is 10 or 11, the Osmachkin CHF correlation (for RBMK analysis) is used. The nine-word format is used on the cards if this word is 10, and the twelve-word format is used on the cards if this word is 11. If this word is 3, the fourteen-word format is used on the cards (needed for the ITER heat transfer model). If this word is 4, an input error will occur. If this word is 5, the twenty-word format is used (needed for heat transfer coefficient multipliers).

8.16 Cards 1CCCG801 through 1CCCG899, Additional Left Boundary

CCCG is a heat structure geometry number. These cards are required whenever the left boundary communicates energy with a fluid volume. The cards are in sequential expansion format (nine words per set if nine-word format, twelve words per set if twelve-word format, thirteen words per set if thirteen-word format, fourteen words per set if fourteen-word format, twenty words per set if twenty-word format), describing nh heat structures. Sequential expansion would only be used where the critical heat flux value was not of importance, since the length to all heat structures in the expansion would be the same. Words 2 through 8 for the nine-word, twelve-word, thirteen-word, and fourteen-word formats; Word 12 in the thirteen-word format; and Words 12 and 13 in the fourteen-word format are used for the CHF correlations.

Nine-word format (Card 1CCCG800 not entered or Word 1 = 0 on Card 1CCCG800).

W1(R) Heat transfer hydraulic diameter (i.e., heated equivalent diameter, thermal diameter) (m, ft). This is $4\left(\frac{\text{flow area}}{\text{heated perimeter}}\right)$ and is recommended to be greater than or equal to the volume hydraulic diameter since (heated perimeter) $\leq$ (wetted perimeter). It is possible to input this diameter to be less than the volume hydraulic diameter. If Word 1 equals 0.0, the volume hydraulic diameter is used. See Section 3.5 of Volume II of the manual for further guidelines.

W2(R) Heated length forward (m, ft). Distance is from the heated inlet to the center of this slab. This quantity will be used when the liquid volume velocity is positive or zero. This is used to get the hydraulic entrance length effect. This is used only for the Groeneveld CHF correlation. It must be > 0. To ignore the length effect, put in a large number (i.e., $\geq$ 10.0).

W3(R) Heated length reverse (m, ft). Distance is from the heated outlet to the center of this slab. This quantity will be used when the liquid volume velocity is negative. This is used to get the hydraulic entrance length effect. This is used only for the Groeneveld CHF correlation. It must be > 0. To ignore the length effect, put in a large number (i.e., $\geq$ 10.0).

W4(R) Grid spacer length forward (m, ft). Distance is from the center of this slab to the nearest grid or obstruction upstream. This quantity will be used when the liquid volume velocity is positive or zero. This is used to get the boundary layer disturbance and atomization effect of a grid spacer in rod bundles. This is used only for the Groeneveld CHF correlation. If the grid K loss (Word 6) is zero, Word 4 is not used.

W5(R) Grid spacer length reverse (m, ft). Distance is from the center of the slab to the nearest grid or obstruction downstream. This quantity will be used when the liquid volume velocity is negative. This is used to get the boundary layer disturbance and atomization effect of a grid spacer in rod bundles. This is used only for the Groeneveld CHF correlation. If the grid K loss (Word 7) is zero, Word 5 is not used.

W6(R) Grid loss coefficient forward. Used for forward flow in rod bundles. This quantity is used when the liquid volume velocity is positive or zero. This is used only for Groeneveld CHF calculation.

W7(R) Grid loss coefficient reverse. Used for reverse flow in rod bundles. This quantity is used when the liquid volume velocity is negative. This is used only for the Groeneveld CHF correlation.

W8(R) Local boiling factor. Enter 1.0 if there is no power source in the heat structure or if the local equilibrium quality is negative (i.e., liquid is subcooled and void fraction is zero). This is the local heat flux/average heat flux from start of boiling. If the power profile is not flat, a steady-state run may help determine this number. This number must be greater than 0.0.

W9(I) Heat structure number.

Twelve-word format (Word 1 = 1 on Card 1CCCG800). The first eight words of this format are identical to the first eight words of the nine-word format.

W9(R) Natural circulation length (m, ft). This should be the height of a hydraulic natural convection cell. For a heated vertical plate, this is the total height of the plate. For inside a horizontal tube, this should be the inside tube diameter. For the outer surface of vertical or horizontal bundles, it is suggested to use the heated bundle height in the vertical direction. When using the nine-word format or when using this twelve-word format with this word set to 0.0, this quantity is set to the value of Word 1, the heat transfer hydraulic diameter (i.e., heated equivalent diameter).

W10(R) Rod or tube pitch-to-diameter ratio. The pitch is the distance between the centers of adjacent rods or tubes. The diameter is the diameter of the rod or tube. The minimum allowed value is 1.1. The maximum allowed value is 1.6. When using the nine-word format, this quantity is set to 1.1.

W11(R) Fouling factor. This factor multiplies the wall heat transfer coefficients and may be used to represent fouling or to run sensitivity studies. This quantity must be a positive nonzero number. When using the nine-word format, this quantity is set to 1.0.

W12(I) Heat structure number.

Thirteen-word format for PG-CHF (Word 1 = 2 on Card 1CCCG800). Word 1 must be input as 0.0. This is discussed in Volume IV, Section 4.3. Words 9, 10, and 11 of this format are identical to Words 9, 10, and 11 of the twelve-word format.

W2(R) Reduced heated length forward (m, ft). This is the product $(y \bullet T_a)$. The first term is the distance from the heated channel inlet to the point of the predicted CHFR (critical heat flux ratio) when the liquid volume velocity is positive or zero. The second term is the ratio of average heat flux from the heated channel inlet to the axial coordinate y (m, ft), i.e., at the point of the predicted CHFR (critical heat flux ratio), to local heat flux q at y. Word 2 should be determined as follows:

$$y \bullet T_a = \frac{1.0}{q(y)} \int_0^y q(z)dz .$$

W3(R) Reduced heated length reverse (m, ft). This is the product $(y \bullet T_a)$. The first term is the distance from the heated channel outlet to the point of the predicted CHFR (critical heat flux ratio) when the liquid volume velocity is negative. The second term is the ratio of average heat flux from the heated channel outlet to the axial coordinate y (m, ft), i.e., at the

point of the predicted CHFR (critical heat flux ratio), to local heat flux q at y. Word 3 should be determined as follows:

$$y \bullet T_a = \frac{1.0}{q(y)} \int_0^y q(z)dz .$$

W4(R) Grid spacer factor forward. This should be input as follows:

If Word 12 = 11, 12, 21, 22, 31, 32, 41, or 42, i.e., CHFR (critical heat flux ratio) for the tube or the internally heated annulus, then Word 4 must be input as 1.0.

If Word 12 = 13, 23, 33, or 43, i.e., CHFR (critical heat flux ratio) for the rod bundle with <u>vaneless</u> grid spacers, then Word 4 should be input as 1.0 / $\overline{R}$, if the statistical evaluation data for the rod bundles are available [$\overline{R}$ is the mean of variable R, where R is the statistical random variable representing CHFR (critical heat flux ratio), i.e., predicted CHF to measured CHF ratio], or Word 4 should be input as 1.0, if the statistical evaluation data for the rod bundle are not available.

If Word 12 = 14, 24, 34, or 44, i.e., CHFR (critical heat flux ratio) for the rod bundle with <u>vane</u> grid spacers, then Word 4 should be determined from statistical evaluation data of specific fuel design.

If Word 12 = 15, then Word 4 should be input as 1.0.

W5(R) Grid spacer factor reverse. This should be input as follows:

If Word 12 = 11, 12, 21, 22, 31, 32, 41, or 42, i.e., CHFR (critical heat flux ratio) for the tube or the internally heated annulus, then Word 5 must be input as 1.0.

If Word 12 = 13, 23, 33, or 43, i.e., CHFR (critical heat flux ratio) for the rod bundle with <u>vaneless</u> grid spacers, then Word 5 should be input as 1.0 / $\overline{R}$, if the statistical evaluation data for the rod bundles are available [$\overline{R}$ is the mean of variable R, where R is the statistical random variable representing CHFR (critical heat flux ratio), i.e., predicted CHF to measured CHF ratio], or Word 5 should be input as 1.0, if the statistical evaluation data for the rod bundle are not available.

If Word 12 = 14, 24, 34, or 44, i.e., CHFR (critical heat flux ratio) for the rod bundle with <u>vane</u> grid spacers, then Word 5 should be determined from statistical evaluation data of specific fuel design.

If Word 12 = 15, then Word 5 should be input as 1.0.

W6(R) Factor of the radial heat flux distribution, T_r. This should be input as

$$T_r = q\frac{\sum_i r_i}{\sum_i r_i q_i} .$$

This is the ratio of local heat flux on referred perimeter to average heat flux on perimeters pertaining to the subchannel (or the annulus).

W7(I) Heated channel upstream hydrodynamic volume number. The volume number is of the form CCCXX0000 for 1-D volumes and CCCXYYZZ0 for 3-D volumes. This refers to the hydrodynamic volume which represents the inlet for the heated channel. This is to get the heated channel inlet quality in the case of forward flow direction.

W8(I) Heated channel downstream hydrodynamic volume number. The volume number is of the form CCCXX0000 for 1-D volumes and CCCXYYZZ0 for 3-D volumes. This refers to the hydrodynamic volume which represents the outlet for the heated channel. This is to get the heated channel inlet quantity in the case of flow in the reverse direction.

W12(I) CHFR (critical heat flux ratio) correlation option. This is input in mn format. The first digit specifies the CHFR (critical heat flux ratio) correlation form.

If m = 1, then the basic form of PG CHFR correlation is used.

If m = 2, then the flux form of the PG CHFR correlation is used.

If m = 3, then the geometry form of PG CHFR correlation is used.

If m = 4, then the power form of PG CHFR correlation is used.

The second digit specifies the geometry of heated structure. If this is the rod bundle, it specifies if and how the statistical evaluation data are applied for the grid spacer factor (see Word 4 and Word 5).

If n = 1, then this is the tube.

If n = 2, then this is the internally heated annulus.

If n = 3, then this is the rod bundle. The use of an isolated subchannel model is recommended. This is used if the applicable PG CHFR correlation statistical evaluation data are not available.

If n = 4, then this is the rod bundle. The use of an isolated subchannel model is recommended. An extended use of the PG CHFR statistical evaluation data is enabled.

If n = 5, then this is the rod bundle. This is only used in combination with m = 1. Applicable for a subchannel code respecting lateral mixing.

W13(I) Heat structure number.

Fourteen-word format (Word 1 = 3 on Card 1CCCG800). Words 1 through 11 are identical to the twelve-word format.

W12(R) Swirl tube twist ratio. If Word 12 = 0.0, the code will reset the twist ratio to 200.0, which is equivalent to modeling a bare tube.

W13(R) Swirl tube inner diameter. If Word 13 = 0.0, the heat transfer hydraulic diameter (i.e., heated equivalent diameter, Word 1) is used.

W14(I) Heat structure number.

Twenty-word format (Word 1 = 5 on Card 1CCCG800). The first eleven words of this format are identical to the first eleven words of the twelve-word format.

W12(R) Multiplier on turbulent forced convection heat transfer coefficient. The default value is 1.0.

W13(R) Multiplier on nucleate boiling heat transfer coefficient. The default value of 1.0 is currently used instead of the user input value.

W14(R) Multiplier on Critical Heat Flux (CHF). The default value is 1.0.

W15(R) Multiplier on transition boiling heat transfer coefficient. The default value is 1.0.

W16(R) Multiplier on film boiling heat transfer coefficient. The default value is 1.0.

W17(R) Multiplier on condensation heat transfer coefficient. The default value of 1.0 is currently used instead of the user input value.

W18(R) Multiplier on free (natural) convection heat transfer coefficient. The default value is 1.0.

W19(R) Multiplier on laminar forced convection heat transfer coefficient. The default value is 1.0.

W20(I) Heat structure number.

8.17 Card 1CCCG900, Additional Right Boundary Option

CCCG is a heat structure geometry number. This card is the same as Card 1CCCG800 but applies to the right boundary. However, an additional value for Word 1 applies to the right boundary of heat

structures associated with the FWHTR component. Word 1 equal to 4 indicates a thirteen-word format for cards 1CCCG901-1CCCG999 (needed for additional FWHTR heat structure right boundary data) (see Volume IV, Section 4.2.20.7).

8.18 Cards 1CCCG901 through 1CCCG999, Additional Right Boundary

CCCG is a heat structure geometry number. These cards are the same as Cards 1CCCG801 through 1CCCG899 but apply to the right boundary. These cards are required whenever the right boundary communicates energy with a fluid volume. However if Word 1 equals 4 on Card 1CCCG900, indicating right boundary data for a FWHTR heat structure, then Words 9, 10, 11, and 12 on these cards are as follows:

Thirteen-word format for FWHTR (Word 1 = 4 on Card 1CCCG900). Words 1 through 8 are identical to Words 1 through 8 of the nine-word format. The natural circulation length (Word 9 in the twelve-word format) and the rod or tube pitch-to-diameter ratio (Word 10 in the twelve-word format) are set to their nine-word format default values (the value of Word 1 and a value of 1.1, respectively).

W9(R) Bottom non-dimensional length defined as the ratio of the distance between the bottom of the FWHTR shell and the bottom of the heat structure (variable L_1 in Volume IV, Section 4.2.20.7, of the manual) divided by the hydraulic diameter of the right boundary volume. This number must be greater than or equal to zero. When using the nine-word format, this quantity is set to 0.2.

W10(R) Top non-dimensional length defined as the ratio of the distance between the bottom of the FWHTR shell and the top of the heat structure (variable L_2 in Volume IV, Section 4.2.20.7, of the manual) divided by the hydraulic diameter of the right boundary volume. This number must be greater than or equal to zero. When using the nine-word format, this quantity is set to 0.8.

W11(I) Number of tubes in vertical alignment represented by this heat structure. This is variable n in Volume IV, Section 4.2.20.7, of the manual. Guidance on setting this number is given in Volume V, Section 4.6.6.5, of the manual. This number must be greater than zero. When using the nine-word format, this quantity is set to 20.

W12(R) Fouling factor. This factor multiplies the wall heat transfer coefficients and may be used to represent fouling or to run sensitivity studies. This quantity must be a positive nonzero number. When using the nine-word format, this quantity is set to 1.0.

W13(I) Heat structure number.

9 Cards 6SSNNXXX, Radiation/Conduction Enclosure Input

These cards are used in NEW and RESTART type problems. This means that the radiation/conduction enclosures may be changed or added during a restart; they cannot be deleted during a restart. This also means the heat structures may be renodalized on restart (i.e., add a new heat structure, delete an existing heat structure, or replace an existing heat structure) if the radiation/conduction enclosure model is activated in the original run. Heat structures need to be input (Cards 1CCCGXNN) in order to use these cards.

This is discussed further in Volume I, Sections 4.13, 4.14; and Volume V, Section 4.7.5.

9.1 Card 60000000, Radiation/Conduction Enclosure Model Control

Any heat structure may radiate/conduct to any other heat structure or set of heat structures in a user-defined enclosure. An enclosure is a set of heat structures that communicate via thermal radiation/conduction. The calculation ignores fluid in the enclosure. It is noted that the radiation/conduction enclosure model is not implicit in surface temperature. This can cause solution instabilities for thin surfaces and large time steps unless convection dominates radiation/conduction.

This card is required.

W1(I) Number of sets of radiation/conduction enclosures, nset. This word must be less than 100 and greater than 0 for radiation/conduction to be on.

9.2 Card 6SS00000, Radiation/Conduction Enclosure Set

SS is the set number. One of these cards must be input for each radiation/conduction enclosure set. One can specify whether the set is radiating or conducting by the sign of Word 1 of this card. For radiation, Word 1 is required and must be positive; Words 2, 3, and 4 are optional. For conduction, Word 1 is required and must be negative; Words 2, 3, and 4 are not used.

This card is required.

W1(I) Number of radiation/conduction enclosure heat slabs, nrh. This word is required. If positive, radiation input is assumed. If negative, conduction input is assumed. This word is the number of radiation/conduction enclosure heat slabs (surfaces) that participate in radiation/conduction enclosure heat transfer in set SS. The maximum is 99.

W2(R) Minimum surface temperature, trmin (K, ^{o}F). If input, this word is the minimum surface temperature below which radiation will no longer be calculated. Each radiation surface in the set is checked, and if any have a surface temperature greater than or equal to Word 2, radiation is computed in the enclosure set. The default value is 900 K (1,160.33 ^{o}F). This

limit only applies to the radiation enclosure model; the conduction enclosure model is always active.

W3(R) Minimum void fraction, voidmn. If input, this word is the minimum void fraction below which radiation will no longer be calculated. Each volume connected to any of the radiating surfaces in the set is checked, and if any have a void fraction greater than or equal to Word 3, radiation is computed in the enclosure set. The default value is 0.75. This is the value used in the two-phase flow regime transition from slug to annular mist. This limit only applies to the radiation enclosure model; the conduction enclosure model is always active.

W4(I) View factor set, refset. If input, this is the number of the set (SS) from which view factors are to be obtained. If no number is found here, the view factors must be input for this set. This word only applies to the radiation enclosure model; it is not used for the conduction enclosure model.

9.3 Card 6SSNN001, Radiation/Conduction Enclosure Heat Structure Data

For this card, each value of SS (set number) on Card 6SS00000 must be entered, and NN (surface number) must take on every value from 1 to absolute value of nrh (Word 1 on Card 6SS00000) for each set number SS. Data are entered for each surface that participates in radiation/conduction enclosure heat transfer. A heat structure surface can only participate in one enclosure set.

This card is required.

W1(I) Heat structure number, jrh. This is the seven-digit number printed in the major edit; it is also used in some of the minor edits and plot variables. This word is CCCG0ZZ, where CCCG is the heat structure geometry combination of surface number NN, and ZZ is the axial level number in the heat structure geometry participating in radiation/conduction enclosure heat transfer of surface number NN.

W2(I) Surface flag, jlr. For this word, 0 = left surface boundary of NN and 1 = right surface boundary of surface number NN.

W3(R) For a radiation enclosure [positive nrh (Word 1 on Card 6SS000000)], this is the emissivity of surface number NN. For a conduction enclosure [negative nrh (Word 1 on Card 6SS000000)], this is the gap conductance ($W/m^2 \cdot K$, $Btu/s \cdot ft^2 \cdot {}^oF$) between surface number NN and the other heat structures within set number SS that surface number NN is in contact with. If this gap conductance is not available, the textbook harmonic mean formula is recommended, where the gap conductance is given by $k_1 k_2 / [(k_1 + k_2) dl]$ and k_1, k_2 are the thermal conductivities ($W/m \cdot K$, $Btu/s \cdot ft \cdot {}^oF$) of the two surfaces and dl is the gap distance (m, ft) between the two surfaces.

9.4 Cards 6SSNN101 through 6SSNN199, Radiation/Conduction Enclosure View/Area Factors

There are nrh•nrh values in each set, where nrh is Word 1 on Card 6SS000000. SS is the set number [from 1 to nset (Word 1 on Card 60000000)]. NN is the surface number [from 1 to absolute value of nrh (Word 1 on Card 6SS00000)]. For the radiation enclosure model and for a given surface number NN, the sum of the view factors must be 1.0 within a relative error of 0.001. For the conduction enclosure model and for a given surface number NN, the area factors represent the portion of the surfaces conducting to the other surfaces, so it is not necessary that the sum of the area factors be 1.0 within a relative error of 0.001. For the radiation enclosure model, the view factor times the surface area of surface number NN must equal the view factor times the area of the receiving surface within a relative error of 0.001. For the conduction enclosure model, the area factor times the surface area of surface number NN times the gap conductance must equal the area factor times the surface area of the receiving surface times the gap conductance within a relative error of 0.001.

The format is two words per surface number in sequential expansion format for absolute value of nrh surface numbers. These cards are required, and the card numbers need not be consecutive. The words for one surface number are

W1(R) View/area factor, vfij. For the radiation enclosure model, this is the view factor from surface number NN to surface number W2(I). For the conduction enclosure model, this is the fraction of the surface area (area factor) of surface number NN in touch with surface number W2(I).

W2(I) Radiation/conduction enclosure surface number to which surface number NN radiates/conducts. Repeat the above two words until view/area factors to all absolute value of nrh (Word 1 on Card 6SS00000) surfaces from all surfaces are entered.

10 Cards 201MMMNN, Heat Structure Thermal Property Data

These cards are used in NEW or RESTART problems. These cards are required if Cards 1CCCGXNN, Heat Structure Input Cards, Section 8 are entered. These data, if present, are processed and stored even if no Cards 1CCCGXNN are entered.

The subfield MMM is the composition number, and the cards with this subfield describe the thermal properties of composition MMM. The composition numbers entered on Cards 1CCCG201 through 1CCCG299 correspond to this subfield. A set of Cards 201MMMNN must be entered for each composition number used, but MMM need not be consecutive. During RESTART, thermal property may be deleted, new compositions may be added, or data may be modified by entering new data for an existing composition.

This is discussed further in Volume I, Section 4.2; and Volume V, Section 4.7.6.

10.1 Card 201MMM00, Composition Type and Data Format

This card is required.

W1(A) Material type. Thermal properties for five materials are stored within the program: gap (GAP), carbon steel (C-STEEL), stainless steel (S-STEEL), uranium dioxide (UO2), and zircaloy (ZR). These properties are selected by entering the name in parentheses for this word. These stored (built-in) properties are discussed further in Volume I, Section 4.5 and Volume V, Section 4.7.6. The user should check whether the data are satisfactory. If a user-supplied table or function is to be used, enter TBL/FCTN for this word. The word DELETE may be entered in RESTART problems to delete a composition.

The next two words are required only if TBL/FCTN is entered for W1.

W2(I) Thermal conductivity format flag or gap mole fraction flag. Enter 1 if a table containing temperature and thermal conductivity is to be entered. Enter 1 if a constant thermal conductivity is to be entered using Word 1 on Card 201MMM01. Enter 2 if functions are to be entered. Enter 3 if the gap conductance model is used, and thus a table containing gas component names and mole fractions is to be entered.

W3(I) Volumetric heat capacity format flag. Enter 1 if a table containing temperature and volumetric heat capacity is to be entered. Enter 1 if a constant volumetric heat capacity is to be entered using Word 1 on Card 201MMM51. Enter -1 if a table containing only volumetric heat capacities is to be entered and the temperature values are identical to the thermal conductivity table. Enter 2 if functions are to be entered.

10.2 Cards 201MMM01 through 201MMM49, Thermal Conductivity

Data or Gap Gas Mole Fraction Data

These cards are required if W1 of Card 201MMM00 contains TBL/FCTN. For a table, enter pairs of temperatures and thermal conductivities or pairs of gas component names and gas mole fractions according to the specification of W2 of Card 201MMM00. For the gap conductance model, the code will calculate the thermal conductivity. One to 7 pairs of gas names and their mole fractions can be entered. The seven gas component names that may be entered are HELIUM, ARGON, KRYPTON, XENON, NITROGEN, HYDROGEN, and OXYGEN. No particular order of the pairs is required. Do not enter any gas component with a zero mole fraction. Normalization of the total mole fraction to one is performed if the sum of the mole fractions entered is not one. This table of gas composition data is required if Card 1CCCG001 is present.

10.2.1 Table Format

If only one word is entered, that word contains the thermal conductivity and it is assumed constant. Otherwise, pairs of temperatures and thermal conductivities or pairs of gas component names and gas mole fractions are entered. The number of temperature and thermal conductivity pairs is limited to 100. The temperatures must be in increasing order. The end-point temperatures must bracket the expected temperatures during the transient. That is, if the temperature is outside the bracketed range, a failure will occur, and a diagnostic edit will be printed out.

W1(R) Temperature (K, ^{o}F) or thermal conductivity (W/m·K, Btu/s·ft·^{o}F) or gas name. If only one thermal conductivity is being entered, a thermal conductivity is entered rather that a temperature. The allowed gas names are HELIUM, ARGON, KRYPTON, XENON, NITROGEN, HYDROGEN, and OXYGEN.

W2(R) Thermal conductivity (W/m·K, Btu/s·ft·^{o}F) or gas mole fraction.

10.2.2 Functional Format

In the functional format, sets of nine quantities are entered, each set containing one function and its range of application. The function is

$$k = A_0 + A_1(TX) + A_2(TX)^2 + A_3(TX)^3 + A_4(TX)^4 + A_5(TX)^{-1}$$

where TX = T - C, T is the temperature argument, and C is a constant. Each function has a lower and upper limit of application. The first function entered must be for the lowest temperature range. The lower limit of each following function must equal the upper bound of the previous function. If the temperature argument becomes zero, a failure will occur, and a diagnostic edit will be printed out.

W1(R) Lower limit temperature (K, ^{o}F).

W2(R) Upper limit temperature (K, ^oF).

W3(R) A_0 (W/m·K, Btu/s·ft·^oF).

W4(R) A_1 (W/m·K^2, Btu/s·ft·$^oF^2$).

W5(R) A_2 (W/m·K^3, Btu/s·ft·$^oF^3$).

W6(R) A_3 (W/m·K^4, Btu/s·ft·$^oF^4$).

W7(R) A_4 (W/m·K^5, Btu/s·ft·$^oF^5$).

W8(R) A_5 (W/m, Btu/s·ft).

W9(R) C (K, ^oF).

10.3 Cards 201MMM51 through 201MMM99, Volumetric Heat Capacity Data

These cards are required if W1 of Card 201MMM00 contains TBL/FCTN. The card numbers need not be consecutive.

10.3.1 Table Format

If only one word is entered, that word contains the volumetric heat capacity and it is assumed constant. Pairs of temperature and volumetric heat capacity are entered if the temperatures are different than the temperatures in the thermal conductivity table or if functions are used for thermal conductivity. If the temperature values are identical, only the volumetric heat capacities need be entered. The number of temperature and volumetric heat capacity pairs or volumetric heat capacity are limited to 100. The temperatures must be in increasing order. The end-point temperatures must bracket the expected temperatures during the transient. That is, if the temperature is outside the bracketed range, a failure will occur, and a diagnostic edit will be printed out.

W1(R) Temperature (K, ^oF) or volumetric heat capacity (J/m^3·K, Btu/ft^3·^oF). If only one volumetric heat capacity or only many volumetric heat capacities are being entered, a volumetric heat capacity is entered here rather than a temperature (see Word 2).

W2(R) Volumetric heat capacity (J/m^3·K, Btu/ft^3·^oF). This is ρC_p, where ρ is density (kg/m^3, lb_m/ft^3) and C_p is specific heat capacity (J/kg·K, Btu/lb_m·^oF). In developing the

volumetric heat capacity input, it is recommended that a constant density be used. This is because the RELAP5-3D© heat conduction solution does not include the effects of geometric changes to the structures. Specifically, the cladding deformation model will calculate the change in the radii of the fuel rod cladding. This change is accounted for in the adjacent fluid volumes (its volume and flow area change), but this information is not accounted for in the conduction calculation; the geometry is the same as was input. Since the geometry does not change, using a constant density will maintain a constant structural mass, which is correct. It is generally appropriate, therefore, to use a room temperature reference density in calculating the volumetric heat capacity, since the dimensions of the structure being modeled are normally known (and taken) at room temperature (see Volume V, Section 4.7.6).

10.3.2 Functional Format

In the functional format, sets of nine quantities are entered, each set containing one function and its range of application. The function is

$$\rho C_p = A_0 + A_1(TX) + A_2(TX)^2 + A_3(TX)^3 + A_4(TX)^4 + A_5(TX)^{-1}$$

where TX = T - C, T is the temperature argument, and C is a constant. Each function has a lower and upper limit of application. The first function entered must be for the lowest temperature range. The lower limit of each following function must equal the upper bound of the previous function. If the temperature argument becomes zero, a failure will occur, and a diagnostic edit will be printed out.

W1(R) Lower limit temperature (K, ^oF).

W2(R) Upper limit temperature (K, ^oF).

W3(R) A_0 ($J/m^3 \cdot K$, $Btu/ft^3 \cdot {}^oF$).

W4(R) A_1 ($J/m^3 \cdot K^2$, $Btu/ft^3 \cdot {}^oF^2$).

W5(R) A_2 ($J/m^3 \cdot K^3$, $Btu/ft^3 \cdot {}^oF^3$).

W6(R) A_3 ($J/m^3 \cdot K^4$, $Btu/ft^3 \cdot {}^oF^4$).

W7(R) A_4 ($J/m^3 \cdot K^5$, $Btu/ft^3 \cdot {}^oF^5$).

W8(R) A_5 ($J/m^{3\cdot}$, Btu/ft^3).

W9(R) C (K, ^oF).

11 Cards 202TTTNN, General Table Data

These cards are used only in NEW or RESTART type problems and are required only if any input references general tables. TTT is the table number, and table references such as for power, heat transfer coefficients, and temperatures. Data must be entered for each table that is referenced, but TTT need not be consecutive. Tables entered but not referenced are stored, and this is not considered an error. During RESTART, general tables may be added, existing tables may be deleted, or existing tables may be modified by entering new data. Tables for hydrodynamic boundary conditions are not input with these general tables but rather are input with tables in the time dependent volume and time dependent junction hydrodynamic components. Tables associated with pumps are not input with these general tables but rather are input with tables in the pump hydrodynamic component.

This is discussed further in Volume II, Section 6; and Volume V, Section 4.8.

11.1 Card 202TTT00, Table Type and Multiplier Data

This card is required.

W1(A) Table type. Enter POWER for power versus time; enter HTC-T for heat transfer coefficient versus time; enter HTRNRATE for heat flux versus time; enter HTC-TEMP for heat transfer coefficient versus temperature; enter TEMP for temperature versus time; enter REAC-T for reactivity versus time; enter NORMAREA for normalized area versus normalized stem position; enter NORMVOL for normalized volume versus normalized stem position or time. In RESTART problems, DELETE can be entered to delete general table TTT. When a general table is used to define a FUNCTION type control system variable, table type REAC-T can be used to prevent undesirable units conversion, since no British to SI units conversion is done for REAC-T entries. The table type REAC-T (has no units conversion) is also used in the hydrodynamic pressurizer and feedwater heater components. When the REAC-T table type is used, the input editing of the printed output will show the label ‘reactivity’, whether it is used for reactivity or not. See Volume II, Section 6.

The following two, three, or four words are optional and allow trips and factors or units changes to be applied to the table entries. If the factors are omitted, the data are used as entered. One multiplier is used for time, power, heat flux, heat transfer coefficient, normalized stem position, normalized area, and normalized volume; a multiplier and additive constant are used for temperature as $T = M^2 \cdot TX + C$, where M is the multiplier, C is the additive constant, and TX is the temperature entered. The first one or two factors apply to the argument variable, time or temperature; one factor is applied if the argument is time, and two factors are used if the argument is temperature. The remaining one or two factors are used for the function, two factors being used if temperature is the function.

W2(I) Table trip number. This number is optional unless factors are entered. If missing or zero, no trip is used, and the time argument in the following table is the time supplied to the

table for interpolation. If nonzero, the number is the trip number, and the time argument in the following table is -1.0 if the trip is false and the time supplied to the table minus the trip time if the trip is true. This field may be omitted if no factors are entered. This number must be zero or blank for tables that are not a function of time.

W3-W5(R) Factors. As described above, enter factors such that when applied to the table values entered, the resultant values have the appropriate units. For the NORMAREA table, the resultant values for both the normalized length and area must be ≥ 0 and ≤ 1.0.

11.2 Cards 202TTT01 through 202TTT99, General Table Data

The card numbers need not be consecutive. The units given are the units required after the factors on Card 202TTT00 have been applied. Sets of two numbers are entered on each card. Sets may be entered one or more per card and may be split across cards. The total number of words must be a multiple of the set size. The total number of words on all the cards must be greater than or equal to 2 and less than or equal to 20,000.

These cards are required.

W1(R) Argument value (s, if time; K, ^{o}F, if temperature; dimensionless, if normalized stem position).

W2(R) Function value (W, MW, if power; K, ^{o}F, if temperature; W/m^2, Btu/s•ft^2, if heat flux; W/m^2•K, Btu/s•ft^2•^{o}F if heat transfer coefficient; dollars, if reactivity; dimensionless, if normalized area or normalized volume). Note: For power, W is used for SI input units, MW is used for British input units.

The tables use linear interpolation for segments between table search argument values. For search arguments beyond the range of entered data, the end-point values are used.

12 Cards 20300000 through 20499999, Plot Request Input Data

The plotting capability is not currently active. Besides not being converted to machine-dependent form from the original CDC-176 version, a proprietary plotting package was required. Many users use the strip option to write an ASCII coded STRIPF file containing data to be plotted and interface this file to plotting routines available within their organizations. XMGR could be used to plot data from the STRIPF file. The INL usually uses XMGR5, an INL extension to XMGR that adds features to conveniently plot information from plot files or STRIPF files.

13 Cards 205CCCNN or 205CCCCN, Control System Input Data

These cards are used in NEW and RESTART problems if a control system is desired. They are also used to define the generic control components employed with the self-initialization option. Input can also be used to compute additional quantities from the normally computed quantities. These additional quantities can then be output in major and minor edits and plots.

This is discussed further in Volume I, Section 6 and Section 8.4; Volume II, Section 4.2; and Volume V, Section 4.10.

Two different card types are available for entering control system data, but only one type can be used in a problem. The digits CCC or CCCC form the control variable number (i.e., control component number). The card format 205CCCNN allows 999 control variables, where CCC ranges from 001 through 999. The card format 205CCCCN allows 9,999 control variables, where CCCC ranges from 0001 through 9999.

If the self-initialization option is selected, the data cards described in Section 13.2, Section 13.3.20, and Section 13.3.21 must be included. If loop flow control is to be included, the data cards described in Section 13.3.19 must also be included.

All internal references to data within control variables are performed in SI units. For example, the references to the junction mass flow rates return values in kg/s, not lb_m/s, even if the problem is being solved in British units. To use British units, the user must convert from SI to British using the scale factor S (or the gain multiplier G) and the constants A_j. These terms are discussed in Volume II, Appendix A, Section 13.3 of the manual.

The control system input provides for an initial value and an initial value (initialization) control flag to indicate whether the initial value is to be computed during the initialization phase of input processing. The initialization of all other systems, such as trips, hydrodynamics, heat structures, and reactor kinetics, precedes that for control systems. If one of those systems needs an initial value of a control system variable, the input value is used. Thus, the control variable value is the input value when used in servo valve initialization, initialization of time-dependent volumes and junctions if control variables are specified as search arguments, initialization of heat structures when a control variable is specified as a heat source, and computation of bias reactivity when control variables contribute to reactivity. However, the input edit and first major edit, after introduction of a control variable, show the value after initialization. See Volume II, Section 4.2.1 and Volume V, Section 4.10.

13.1 Card 20500000, Control Variable

If this card is omitted, card type 205CCCNN is used. If this card is entered, either card format can be selected. This card cannot be entered on RESTART problems if control components exist from the restart problem, in which case the card format from the restart problem must be used.

W1(I) Enter 999 to select the 205CCCNN format or 9999 (4095 also allowed) to select the 205CCCCN format.

13.2 Card 205CCC00 or 205CCCC0, Control Component Type

This card is required. One card must be entered for each of the generic control components when using the self-initialization option.

W1(A) Alphanumeric name. Enter a name descriptive of the component. This name will appear in the printed output along with the component number. A limit of 8 characters is allowed for most computers, e.g., workstations, CRAY, and IBM computers.

W2(A) Control component type. Enter one of the component names, SUM, MULT, DIV, DIFFRENI, DIFFREND, INTEGRAL, DELAY, FUNCTION, STDFNCTN, TRIPUNIT, TRIPDLAY, POWERI, POWERR, POWERX, PROP-INT, LAG, LEAD-LAG, CONSTANT, SHAFT, PUMPCTL, STEAMCTL, FEEDCTL, INVKIN, CPLFNCTN, or the command, DELETE. If CPLFNCTN is entered, enter any alphanumeric word in Word 1 and no additional words are entered on this card. No other input cards are needed when using the CPLFNCTN component. See Appendix B for the PVM executive input. If DELETE is entered, enter any alphanumeric word in Word 1 and zeros in the remaining words. No other cards are needed when deleting a component.

W3(R) Scaling factor. For the CONSTANT component, this quantity is the constant value; no additional words are entered on this card, and Cards 205CCC01 through 205CCC09 or 205CCCC1 through 205CCCC9 are not entered. For the PUMPCTL, STEAMCTL, or FEEDCTL components, this is the gain multiplier (G) for the output signal; for the other components, this is the variable S.

W4(R) Initial value.

W5(I) Initial value control flag. Zero (initialization control flag is off) means no initial condition calculation, and W4 is used as the initial condition; one (initialization control flag is on) means compute initial condition. See Section 4.2.1 of Volume II for more information.

W6(I) Limiter control. Enter zero, or omit this and the following words if no limits on the control variable are to be imposed. Enter 1 if only a minimum limit is to be imposed, 2 if only a maximum limit is to be imposed, and enter 3 if both minimum and maximum limits are to be imposed.

W7(R) Minimum or maximum value. This word is the minimum or maximum value if only one limit is to be imposed or is the minimum value if both limits are to be imposed.

W8(R) Maximum value. This word is used if both limits are to be imposed.

13.3 Cards 205CCC01 through 205CCC99 or 205CCCC1 through 205CCCC9, Control Component Data

These cards are required. The format of these cards depends on the control component type. An equation is used to describe the processing by each component. The symbol Y represents the control variable defined by the component. The symbols A_j, j = 1, 2, ..., J, represent constants defined by the control component input data. The variables V_j, j = 1, 2, ..., J, represent any of the variables listed in the minor edit input description. Besides hydrodynamic component data, heat structure data, reactor kinetic data, etc., any of the control variables including the variable being defined may be specified. The symbol S is the scale factor (or G, the gain multiplier, for self-initialization control components) on Card 205CCC00 or 205CCCC0. The variables V_j use the code's internal units (SI). To use British units, the user must convert from SI to British using the scale factor S (or the gain multiplier G) and the constants A_j.

See Section 6 and Section 8.4 of Volume I for a detailed description of these models.

13.3.1 Sum-Difference Component

These words are for Cards 205CCC01 through 205CCC09 or 205CCCC1 through 205CCCC9. This is discussed further in Volume I, Section 6; Volume II, Section 4.2; and Volume V, Section 4.10.

This component is indicated by SUM in Word 2 of Card 205CCC00 or 205CCCC0. The sum-difference component is defined by

$$Y = S(A_0 + A_1V_1 + A_2V_2 + ... + A_jV_j) \ .$$

W1(R) Constant A_0.

W2(R) Constant A_1.

W3(A) Alphanumeric name of variable request code for V_1.

W4(I) Numeric (parameter) part of the variable request code for V_1. At least 4 words that define a constant and 1 product term must be entered. Additional sets of 3 words corresponding to Words 2 through 4 can be entered for additional product terms, up to 50 product terms. One or more cards may be used as desired. Card numbers need not be strictly consecutive. The sign of A_j determines addition or subtraction of the product terms.

13.3.2 Multiplier Component

These words are for Cards 205CCC01 through 205CCC09 or 205CCCC1 through 205CCCC9. This is discussed further in Volume I, Section 6; Volume II, Section 4.2; and Volume V, Section 4.10.

This component is indicated by MULT in Word 2 of Card 205CCC00 or 205CCCC0. The multiplier component is defined by

$$Y = SV_1V_2...V_j \ .$$

W1(A) Alphanumeric name of the variable request code for V_1.

W2(I) Numeric (parameter) part of the variable request code for V_1. At least 2 words must be entered. Additional pairs of words can be entered on this or additional cards to define additional factors, up to 20 pairs. Card numbers need not be strictly consecutive.

13.3.3 Divide Component

These words are for Cards 205CCC01 through 205CCC09 or 205CCCC1 through 205CCCC9. This is discussed further in Volume I, Section 6; Volume II, Section 4.2; and Volume V, Section 4.10.

This component is indicated by DIV in Word 2 of Card 205CCC00 or 205CCCC0. The divide component is defined by

$$Y = \frac{S}{V_1} \quad \text{or} \quad Y = \frac{SV_2}{V_1} \ .$$

Specifying 2 words on the card indicates the first form, and specifying 4 words on the card indicates the second form. Execution will terminate if a divide by zero is attempted.

W1(A) Alphanumeric name of the variable request code for V_1.

W2(I) Numeric (parameter) part of the variable request code for V_1.

W3(A) Alphanumeric name of the variable request code for V_2.

W4(I) Numeric (parameter) part of the variable request code for V_2.

13.3.4 Differentiating Components

These words are for Cards 205CCC01 through 205CCC09 or 205CCCC1 through 205CCCC9. This is discussed further in Volume I, Section 6; Volume II, Section 4.2; and Volume V, Section 4.10.

These components are indicated by DIFFRENI or DIFFREND in Word 2 of Card 205CCC00 or 205CCCC0. The differentiating component is defined by

$$Y = S\frac{dV_1}{dt} \quad .$$

This is evaluated by

$$Y = \frac{2S}{\Delta t}(V_1 - V_{1_0}) - Y_0 \qquad \text{(DIFFERENI)}$$

$$Y = S\frac{(V_1 - V_{10})}{\Delta t} \qquad \text{(DIFFREND)}$$

where Δt is the time step, and V_{1_0} and Y_0 are values at the beginning of the time step. The numerical approximations for the DIFFRENI and INTEGRAL components are exact inverses of each other provided the scaling factors (S) are a reciprocal of each other. However, an exact initial value is required to use the DIFFRENI component, and erroneous results are obtained if an exact initial value is not furnished. The DIFFREND component uses a simple difference approximation that is less accurate and is not consistent with the integration approximation, but does not require an initial value. For these reasons, use of DIFFRENI is not recommended.

Since differentiation, especially numerical differentiation, can introduce noise into the calculation, it should be avoided if possible. When using control components to solve differential equations, the equations can be arranged such that INTEGRAL components can handle all indicated derivatives except possibly those involving noncontrol variables.

W1(A) Alphanumeric name of variable request code for V_1.

W2(I) Numeric (parameter) part of variable request code for V_1.

13.3.5 Integrating Component

These words are for Cards 205CCC01 through 205CCC09 or 205CCCC1 through 205CCCC9. This is discussed further in Volume I, Section 6; Volume II, Section 4.2; and Volume V, Section 4.10.

This component is indicated by INTEGRAL in Word 2 of Card 205CCC00 or 205CCCC0. The integrating component is defined by

$$Y = S\int_0^t V_1 dt$$

or, in Laplace notation,

$$Y(s) = \frac{SV_1(s)}{s} \quad .$$

This is evaluated by

$$Y = Y_0 + S \bullet (V_1 + V_{1_0})\frac{\Delta t}{2}$$

where Δt is the time step and Y_0 and V_{1_0} are values at the beginning of the time step.

W1(A) Alphanumeric name of the variable request code for V_1.

W2(I) Numeric (parameter) part of the variable request code for V_1.

13.3.6 Delay Component

These words are for Cards 205CCC01 through 205CCC09 or 205CCCC1 through 205CCCC9. This is discussed further in Volume I, Section 6; Volume II, Section 4.2; and Volume V, Section 4.10.

This component is indicated by DELAY in Word 2 of Card 205CCC00 or 205CCCC0. The component is defined by

$$Y = SV_1 (t - t_d)$$

where t is time and t_d is the delay time.

W1(A) Alphanumeric name of the variable request code for V_1.

W2(I) Numeric (parameter) part of the variable request code for V_1.

W3(R) Delay time, t_d (s).

W4(I) Number of hold positions. This quantity, h, must be > 0 and $\leq$ 100. This quantity determines the length of the table used to store past values of the quantity V_1. The maximum number of time-function pairs that can be stored is h + 2. The delay table time increment, d_{TM}, is $d_{TM} = \frac{t_d}{h}$. The delayed function is obtained by linear interpolation for $V_1(t - t_d)$ using the stored past history. As the problem is advanced in time, new time values are added to the table. Once the table is filled, new values replace values that are older than the delay time. There are no restrictions on t_d or d_{TM} relative to the time steps on Cards 201-299. When a change in advancement time is made at a restart, the time

values in this table are changed to have time values as if the problem in the restart had run to the new advancement time.

13.3.7 Functional Component

These words are for Cards 205CCC01 through 205CCC09 or 205CCCC1 through 205CCCC9. This is discussed further in Volume I, Section 6; Volume II, Section 4.2; and Volume V, Section 4.10.

This component is indicated by FUNCTION in Word 2 of Card 205CCC00 or 205CCCC0. The component is defined by

$Y = S[FUNCTION\ (V_1)]$

where FUNCTION is defined by a general table. This allows the use of any function that is conveniently defined by a table lookup and linear interpolation procedure. The function component can also be used to set limiting values.

W1(A) Alphanumeric name of the variable request code for V_1.

W2(I) Numeric (parameter) part of the variable request code for V_1.

W3(I) General table number of the function.

13.3.8 Standard Function Component

These words are for Cards 205CCC01 through 205CCC09 or 205CCCC1 through 205CCCC9. This is discussed further in Volume I, Section 6; Volume II, Section 4.2; and Volume V, Section 4.10.

This component is indicated by STDFNCTN in Word 2 of Card 205CCC00 or 205CCCC0. The component is defined by

$Y = S[FNCTN\ (V_1, V_2, ...)]$

where FNCTN is ABS (absolute value), SQRT (square root), EXP (e raised to power), LOG (natural logarithm), SIN (sine), COS (cosine), TAN (tangent), ATAN (arc tangent), MIN (minimum value), or MAX (maximum value). All function types except MIN and MAX must have only one argument; MIN and MAX function types must have at least two arguments and may have up to twenty arguments. If the control variable being defined also appears in the argument list of MIN or MAX, the old time value is used in the comparison.

W1(A) FNCTN.

W2(A) Alphanumeric name of the variable request code for V_1.

W3(I) Numeric (parameter) part of the variable request code for V_1.

13.3.9 Unit Trip Component

These words are for Cards 205CCC01 through 205CCC09 or 205CCCC1 through 205CCCC9. This is discussed further in Volume I, Section 6; Volume II, Section 4.2; and Volume V, Section 4.10.

This component is indicated by TRIPUNIT in Word 2 of Card 205CCC00 or 205CCCC0. The component is defined by

$$Y = S \bullet U(\pm T_1)$$

where U is 0.0 if the trip, T_1, is false and is 1.0 if the trip is true. If the complement of T_1 is specified, U is 1.0 if the trip is false and 0.0 if the trip is true.

W1(I) Trip number. A minus sign may prefix the trip number to indicate that the complement of the trip is to be used.

13.3.10 Trip Delay Component

These words are for Cards 205CCC01 through 205CCC09 or 205CCCC1 through 205CCCC9. This is discussed further in Volume I, Section 6; Volume II, Section 4.2; and Volume V, Section 4.10.

This component is indicated by TRIPDLAY in Word 2 of Card 205CCC00 or 205CCCC0. The component is defined by

$$Y = S \cdot T_{rptim}(T_1)$$

where T_{rptim} is the time the trip last turned true. If the trip is false, the value is -1.0; if the trip is true, the value is zero or a positive number.

W1(I) Trip number, T_1.

13.3.11 Integer Power Component

These words are for Cards 205CCC01 through 205CCC09 or 205CCCC1 through 205CCCC9. This is discussed further in Volume I, Section 6; Volume II, Section 4.2; and Volume V, Section 4.10.

This component is indicated by POWERI in Word 2 of Card 205CCC00 or 205CCCC0. The component is defined by

$$Y = SV_1^I \ .$$

W1(A) Alphanumeric name of the variable request code for V_1.

W2(I) Numeric (parameter) part of the variable request code for V_1.

W3(I) I.

13.3.12 Real Power Component

These words are for Cards 205CCC01 through 205CCC09 or 205CCCC1 through 205CCCC9. This is discussed further in Volume I, Section 6; Volume II, Section 4.2; and Volume V, Section 4.10.

This component is indicated by POWERR in Word 2 of Card 205CCC00 or 205CCCC0. The component is defined by

$$Y = SV_1^R \ .$$

W1(A) Alphanumeric name of the variable request code for V_1.

W2(I) Numeric (parameter) part of the variable request code for V_1.

W3(R) R.

13.3.13 Variable Power Component

These words are for Cards 205CCC01 through 205CCC09 or 205CCCC1 through 205CCCC9. This is discussed further in Volume I, Section 6; Volume II, Section 4.2; and Volume V, Section 4.10.

This component is indicated by POWERX in Word 2 of Card 205CCC00 or 205CCCC0. The component is defined by

$$Y = SV_1^{V_2} \ .$$

W1(A) Alphanumeric name of the variable request code for V_1.

W2(I) Numeric (parameter) part of the variable request code for V_1.

W3(A) Alphanumeric name of the variable request code for V_2.

W4(I) Numeric (parameter) part of the variable request code for V_2.

13.3.14 Proportional-Integral Component

These words are for Cards 205CCC01 through 205CCC09 or 205CCCC1 through 205CCCC9. This is discussed further in Volume I, Section 6; Volume II, Section 4.2; and Volume V, Section 4.10.

This component is indicated by PROP-INT in Word 2 of Card 205CCC00 or 205CCCC0. The component is defined by

$$Y = S\left[A_1 V_1 + A_2 \int_0^t V_1 dt\right]$$

or in Laplace transform notation,

$$Y(s) = S\left[A_1 + \frac{A_2}{s}\right] V_1(s) \quad .$$

If the initialization control flag is on,

$$Y(t_0) = SA_1 V_1(t_0) \quad .$$

If it is desired that the output quantity Y remain constant as long as the input quantity remains constant, V_1 must initially be zero regardless of the initialization control flag.

W1(R) A_1.

W2(R) A_2.

W3(A) Alphanumeric name of the variable request code for V_1.

W4(I) Numeric (parameter) part of the variable request code for V_1.

13.3.15 Lag Component

These words are for Cards 205CCC01 through 205CCC09 or 205CCCC1 through 205CCCC9. This is discussed further in Volume I, Section 6; Volume II, Section 4.2; and Volume V, Section 4.10.

This component is indicated by LAG in Word 2 of Card 205CCC00 or 205CCCC0. This component is defined by

$$Y = \int_0^t \left(\frac{SV_1 - Y}{A_1}\right) dt$$

or, in Laplace transform notation,

$$Y(s) = \frac{S}{1 + A_1 s} V_1(s) \quad .$$

If the initialization control flag is on or off,

$$Y(t_0) = SV_1(t_0) \quad .$$

If the initialization control flag is on or off, and if the initial values of Y and V_1 satisfy a specified relationship, Y remains constant as long as V_1 retains its initial value.

W1(R) Lag time, A_1 (s).

W2(A) Alphanumeric name of the variable request code for V_1.

W3(I) Numeric (parameter) part of the variable request code for V_1.

13.3.16 Lead-Lag Component

These words are for Cards 205CCC01 through 205CCC09 or 205CCCC1 through 205CCCC9. This is discussed further in Volume I, Section 6; Volume II, Section 4.2; and Volume V, Section 4.10.

This component is indicated by LEAD-LAG in Word 2 of Card 205CCC00 or 205CCCC0. The component is defined by

$$Y = \frac{A_1 S V_1}{A_2} + \int_0^t \left(\frac{SV_1 - Y}{A_2} \right) dt$$

or, in Laplace transform notation,

$$Y(s) = S \frac{1 + A_1 s}{1 + A_2 s} V_1(s) \quad .$$

If the initialization control flag is on,

$$Y(t_0) = SV_1(t_0) \quad .$$

If the initialization control flag is on, and if the initial values of Y and V_1 satisfy a specified relationship, Y remains constant as long as V_1 retains its initial value.

W1(R) Lead time, A_1 (s).

W2(R) Lag time, A_2 (s).

W3(A) Alphanumeric name of the variable request code for V_1.

W4(I) Numeric (parameter) part of the variable request code for V_1.

13.3.17 Constant Component

These words are for Cards 205CCC01 through 205CCC09 or 205CCCC1 through 205CCCC9. This is discussed further in Volume I, Section 6; Volume II, Section 4.2; and Volume V, Section 4.10.

This component is indicated by CONSTANT in Word 2 of Card 205CCC00 or 205CCCC0. Cards 205CCC01 through 205CCC99 or 205CCCC1 through 205CCCC9 are not entered. The quantity in Word 3 of Card 205CCC00 or 205CCCC0 is the constant value used for this component.

13.3.18 Shaft Component

These words are for Cards 205CCC01 through 205CCC09 or 205CCCC1 through 205CCCC9. This is discussed further in Volume I, Section 6; Volume II, Section 4.2; and Volume V, Section 4.10.

This component is indicated by SHAFT in Word 2 of Card 205CCC00 or 205CCCC0. A GENERATR component may optionally be associated with a SHAFT component. The SHAFT component advances the rotational velocity equation

$$\sum_i I_i \frac{d\omega}{dt} = \sum_i \tau_i - \sum_i f_i \omega + \tau_c$$

where I_i is the moment of inertia of component i, ω is rotational velocity, τ_i is torque of component i, f_i is the friction factor of component i, and τ_c is an optional torque from a control component. The summations include the shaft as well as the pump, turbine, and generator components that are connected to the shaft.

The SHAFT control component differs somewhat from other control components. The scale factor on Card 205CCC00 or 205CCCC0 must be 1.0. The initial value and optional minimum and maximum values have units (rad/s, rev/min), and British-SI units conversion are applied to these quantities. The output of the SHAFT in minor and major edits is in the requested units. Card number ranges are restricted so that both data to complete the SHAFT component description and optional data to describe a generator can be entered. Units conversion is applied to the following cards.

13.3.18.1 Cards 205CCC01 through 205CCC05 or 205CCCC1 through 205CCCC5, Shaft Description.

W1(I) Torque control variable number. If zero, there is no contribution to torque from the control system. If nonzero, the control variable with this number is assumed to be a torque and is added to the torques from the other components attached to the shaft. The torque must be in SI units.

W2(R) Shaft moment of inertia, I_i (kg•m^2, lb$_m$•ft^2).

W3(R) Friction factor for the shaft, f_i (N•m•s, lb$_f$•ft•s).

W4(A) Type of attached component. Enter either TURBINE, PUMP, CPRSSR, or GENERATR.

W5(I) Component number. This is the hydrodynamic component number for a TURBINE, PUMP, CPRSSR, or the control variable number for this SHAFT component if GENERATR.

Additional two-word pairs may be entered to attach additional components to the shaft, up to a total of 50 components. Only one generator, the one which is defined as part of this SHAFT component, may be attached.

13.3.18.2 Card 205CCC06 or 205CCCC6, Generator Description. Each SHAFT component may optionally define an associated GENERATR component. All six words must be entered.

W1(R) Initial rotational velocity (rad/s, rev/min).

W2(R) Synchronous rotational velocity (rad/s, rev/min).

W3(R) Moment of inertia, I_i (kg•m^2, lb$_m$•ft^2).

W4(R) Friction factor, f_i (N•m•s, lb$_f$•ft•s).

W5(I) Generator trip number. If zero, the generator is always connected to an electrical distribution system, and the rotational velocity is always forced to the synchronous speed. If nonzero and the trip is false, the generator is connected to an electrical distribution system, and the rotational velocity is forced to the synchronous speed. If nonzero and the trip is true, the generator is not connected to an electrical distribution system, and the generator and shaft rotational velocity is computed from the rotational velocity equation.

W6(I) Generator disconnect trip number. If zero, the generator is always connected to the shaft. If nonzero, the generator is connected to the shaft when the trip is false and disconnected when the trip is true.

13.3.19 PUMPCTL Component

These words are for Cards 205CCC01 through 205CCC09 or 205CCCC1 through 205CCCC9. This is discussed further in Volume I, Section 8.4; and Volume V, Section 4.10.

This component is indicated by PUMPCTL in Word 2 of Card 205CCC00 or Card 205CCCC0. This component is specified when using the self-initialization option to control loop flow, but it is not limited to that use. For each PUMPCTL component enter

W1(A) Alphanumeric name of setpoint value.

W2(I) Numeric (parameter) part of setpoint value.

W3(A) Alphanumeric name of sensed variable.

W4(I) Numeric (parameter) part of sensed variable.

W5(R) Scale factor(s) applied to sensed variable and setpoint value, S_i. Must be nonzero.

W6(R) Integral part time constant, T_2 (s).

W7(R) Proportional part time constant, T_1 (s).

Standard use of PUMPCTL controller require the following interpretation of the input data: W1 and W2 contain CNTRLVAR and CCC (or CCCC), respectively, where CCC (or CCCC) is a CONSTANT type control element containing the desired (setpoint) flow rate. W3 is MFLOWJ, and W4 is the junction number at which the flow is to be sensed and compared to the setpoint. W5 is the S_i value used to divide the difference between the desired (setpoint) and sensed flow rate to produce the error signal E_1. E_1 must be initially zero if it is intended to have the controller output remain constant as long as the input quantities remain constant. W6 and W7 are the T_2 and T_1 values, respectively. All variables having units must be in SI units.

13.3.20 STEAMCTL Component

These words are for Cards 205CCC01 through 205CCC09 or 205CCCC1 through 205CCCC9. This is discussed further in Volume I, Section 8.4; and Volume V, Section 4.10.

This component is indicated by STEAMCTL in Word 2 of Card 205CCC00 or 205CCCC0. This component is specified when using the self-initialization option to control steam flow from one or more steam generators, but it is not limited to that use. For each STEAMCTL component enter

W1(A) Alphanumeric name of setpoint value.

W2(I) Numeric (parameter) part of setpoint value.

W3(A) Alphanumeric name of sensed variable.

W4(I) Numeric (parameter) part of sensed variable.

W5(R) Scale factor(s) applied to sensed variable and setpoint value, S_j. Must be nonzero.

W6(R) Integral part time constant, T_4 (s).

W7(R) Proportional part time constant, T_3 (s).

Standard use of the STEAMCTL controller requires the following interpretation of the input data: W1 and W2 contain CNTRLVAR and CCC (or CCCC), respectively, where CCC (or CCCC) is a CONSTANT type control element containing the desired (setpoint) value. This constant would be the desired (setpoint) cold leg temperature (for suboptions A and B) or secondary pressure (suboptions C and D). W3 would be TEMPF (for suboptions A and B) or P (for suboptions C and D), and W4 would be the volume number where the temperature (suboptions A and B) or pressure (suboptions C and D) is sensed. W5 is the S_j value used to divide the difference between the desired (setpoint) and sensed temperature (suboptions A and B) or pressure (suboptions C and D) to produce the error signal E_2. E_2 must be initially zero if it is intended to have the controller output remain constant as long as the input quantities remain constant. W6 and W7 are the T_4 and T_3 values respectively. All variables having units must be in SI units.

13.3.21 FEEDCTL Component

These words are for Cards 205CCC01 through 205CCC09 or 205CCCC1 through 205CCCC9. This is discussed further in Volume I, Section 8.4; and Volume V, Section 4.10.

This component is indicated by FEEDCTL in Word 2 of Card 205CCC00 or 205CCCC0. This component is specified when using the self-initialization option to control feedwater flow to a steam generator, but it is not limited to that use. For each FEEDCTL component enter

W1(A) Alphanumeric name of setpoint value.

W2(I) Numeric (parameter) part of setpoint value.

W3(A) Alphanumeric name of first sensed variable to be compared with setpoint.

W4(I) Numeric (parameter) part of first sensed variable to be compared with setpoint.

W5(R) Scale factor applied to first sensed variable and setpoint value, S_k. Must be nonzero.

W6(A) Alphanumeric name of second sensed variable.

W7(I) Numeric (parameter) part of second sensed variable.

W8(A) Alphanumeric name of third sensed variable to be compared with second sensed variable.

W9(I) Numeric (parameter) part of third sensed variable to be compared with second sensed variable.

W10(R) Scale factor applied to second and third sensed variables, S_m. Must be nonzero.

W11(R) Integral part time constant, T_6 (s).

W12(R) Proportional part time constant, T_5 (s).

Standard use of the FEEDCTL controller requires the following interpretation of the input data: W1 and W2 contain CNTRLVAR and CCC (or CCCC), respectively, where CCC (or CCCC) is a CONSTANT type control element containing the desired (setpoint) value. This constant would be the desired (setpoint) steam generator secondary side water level. The latter may be expressed alternatively as a desired secondary coolant mass or as a differential pressure measured between two locations in the steam generator downcomer. W3 and W4 contain CNTRLVAR and CCC (or CCCC), respectively, where CCC (or CCCC) is the number of the control component that describes the summing algorithm to compute the sensed variable (e.g., collapsed water level may be computed by summing the product of VOIDF and volume length over the control volumes in the riser section). W5 is the S_k value used to divide the difference between the desired (setpoint) and sensed water level to produce the first portion of the error signal E_3. W6 is MFLOWJ, and W7 is the junction number of the steam exit junction from the steam generator. W8 is MFLOWJ, and W9 is the junction number of the feedwater inlet junction. W10 is the S_m value used to divide the difference between the sensed steam flow and sensed feedwater flow to produce the second portion of the error signal E_3. E_3 must be initially zero if it is intended to have the controller output remain constant as long as the input quantities remain constant. W11 and W12 are the T_6 and T_5 values, respectively. All variables having units must be in SI units.

13.3.22 Inverse Kinetics Component

These words are for Cards 205CCC01 through 205CCC09 or 205CCCC1 through 205CCCC9. This is discussed further in Volume I, Section 6; Volume II, Section 4.2; and Volume V, Section 4.10.

This component is indicated by INVKIN in Word 2 of Card 205CCC00 or Card 205CCCC0. The component is defined by

$$Y = S\left(\frac{\frac{\Lambda}{\beta}\frac{dV_1}{dt} + \sum_{i=1}^{N_d} D_i(t_o + \Delta t)}{V_1}\right)$$

where

$$D_i(t_o + \Delta t) = e^{-\lambda_i \Delta t} D(t_o + \Delta t) + \frac{\beta_i}{\beta \lambda_i}(1 - e^{-\lambda_i \Delta t})\frac{dV_1}{dt}$$

where Δt is the time step size and t_o is the time at the beginning of the time step.

W1(A) Alphanumeric name of the variable request code for V_1.

W2(I) Integer name of the variable request code for V_1.

The following 14 words are optional. If not supplied, typical default values are assigned. If any entry is input, all 14 items are required.

W3-W8(R) Delayed neutron precursor yield ratios, f_i (= β_i/β). Six values are required. The values must sum to one within a relative error of 1.0×10^{-6}. The default values are 0.038, 0.213, 0.188, 0.407, 0.128, and 0.026.

W9-W14(R) Delayed neutron decay constant, λ_i (s^{-1}). Six values are required. The default values are 0.0127, 0.0317, 0.115, 0.311, 1.40, and 3.87.

W15(R) Effective delayed neutron fraction, β. This quantity must be greater than zero. The default value is 0.0065, which is the value for ^{235}U.

W16(R) Prompt neutron generation time, Λ (s). This quantity must be greater than zero. The default value is 2.4×10^{-4} s, which is the value for light water.

14 Cards 220MMMXX, Radionuclide Transport Input

These cards are required if the transport of radioactive species in the coolant systems is desired. These cards are used only in NEW or RESTART type problems. If no radionuclide transport data is present in a restart problem, the data will be added; if radionuclide transport data are already present, the data are deleted and replaced by the new data. A complete set of radionuclide transport data must always be entered. Initial conditions are computed in the same manner for new problems or restart problems with data replacement.

This is discussed further in Volume I, Section 3.1.1.4.

14.1 Card 22000000, Number of Radionuclide Species

This card is required if the transport of radionuclide species is desired.

W1(I) The number of radionuclide species. This number must be greater than 1 and less than or equal to 999.

14.2 Card 220MMM00, Basic Data for Radionuclide Specie

These cards are required. The card contains the basic data for radionuclide specie MMM. The MMM portion of the card number has no significance other than to specify the order in which the input data for the radionuclide transport model are processed. The radionuclide species are specified for plotting and minor edits by their alphanumeric identifier (i.e., the first word on these cards) instead of by their sequence number.

W1(A) Alphanumeric identifier for specie. The identifier for each specie is limited to 5 characters. The character string N16 is a reserved identifier for the ^{16}N radionuclide. The identifier may be entered in upper case, mixed case, or lower case. This word is required.

W2(I) Phase flag. This flag specifies the fluid phase with which the radionuclide specie is transported. A value of zero means that the specie is transported by the liquid phase and a value of one means that the specie is transported by the vapor/gas phase. This word is required.

W3(R) Radionuclide decay constant (s^{-1}). This word is required.

W4(R) Energy released by radionuclide decay (Mev). This word is required.

W5(R) Molecular weight of specie (kg/kg-mole). This word is required.

W6(A) Alphanumeric identifier for parent specie. This specie may be created by the radioactive decay of a parent specie or by neutron absorption in the parent specie. If a parent specie is

specified for this specie, the data for the parent specie must be entered before the data for this specie (i.e., the value of MMM for the parent specie must be less that the value of MMM for this specie). The value NONE may be entered for this word if the specie has no parent (the parent specie for N16 must be entered as NONE because the parent for ^{16}N is ^{16}O that is contained in the H_2O coolant and is not any of the other radionuclide species). The identifier is limited to 5 characters. A value must be entered for this word if Words 7 through 9 are entered on this card. This word is optional, and the default value is NONE.

W7(I) Radionuclide production flag. This flag is used for N16 or any other radionuclide that can be produced by neutron absorption in materials in the coolant. A value of zero means no production by neutron absorption in the parent specie and one means that this specie can be created by neutron absorption in the parent material. This value may only be non-zero if the nodal neutron kinetics has been activated by the user. This word is optional, and the default value is zero.

W8(R) Weight factor in specie production computation. A typical value would represent the ratio of the flux-volume integral in the fluid portion of a fuel cell to the flux-volume integral over the complete fuel cell. The value must be greater than or equal to zero and less than or equal to one. This word is optional, and the default value is zero.

W9(R)-... Production cross sections for the parent nuclide (m^2). Words should be entered for the number of groups specified for the nodal kinetics model. The recommended values for N16 are a value of 20.2e-6 for neutron energy group 1 (the highest neutron energy group) and 0.0 for all the other neutron energy groups. These words are optional, and the default values are zero.

14.3 Cards 220MMM01-220MMM99, Radionuclide Transport Source Data

These cards are required for all species except for N16 and those species that are created by neutron absorption in their parent specie. The production computation (specified in Word 7 on Card 220MMM00 for this specie) is only available when the nodal neutron kinetics model has been activated. Production computations for N16 and any other specie that can be created by neutron absorption must be accomplished through control variables and sources if the point kinetics model has been selected by the user. Any number of sources (or sinks) may be specified for a specie and pairs of data items are entered for each source.

W1(I) Volume identifier for source (kg/s) of specie MMM. The volume identifier has the same format as for plot variables and minor edits (e.g., CCCNN0000 for volume NN in component CCC).

W2(I) Identifier of control variable or general table from which to compute the source (kg/s) of specie MMM. The value must be greater than or equal to one and less than or equal to 20000. If the value is greater than 10000, the value is the identifier of a control variable whose identifier is the value minus 10000. If the value is less than 1000, the value is the identifier of a general table. A positive value from the control variable or general table means a source of specie MMM, and a negative value means a sink of specie MMM.

15 Cards 30000000 through 30099999, 310000000 through 339999999, 340000000 through 359999999, 390000000 through 399999999, Reactor Kinetics Input

These cards are required if a space-independent (point) reactor kinetics or a nodal reactor kinetics calculation is desired. These cards may be entered in a new problem or on a restart. If no reactor kinetics data are present in a restart problem, the data will be added; if reactor kinetics data are already present, the data are deleted and replaced by the new data. A complete set of reactor kinetics data must always be entered. Initial conditions are computed the same for new or restart problems; the initial conditions can be obtained from assuming infinite operating time at the input power or from an input power history.

This is discussed further in Volume I, Section 7; Volume II, Section 5; and Volume V, Section 4.9.

15.1 Card 30000000, Reactor Kinetics Type

This card is required for either point or nodal kinetics problems.

W1(A) Kinetics type. Enter POINT, NODAL, or DELETE. Enter POINT for the point reactor kinetics option. Enter NODAL for the nodal reactor kinetics option. Enter DELETE in a restart problem if reactor kinetics is to be deleted. No other data are needed if reactor kinetics is being deleted.

W2(A) Feedback type. Enter SEPARABL, TABLE3, TABLE4, TABLE3A, TABLE4A, RAMONA, HWR, GEN, or RBMK. The first five options are allowed only in POINT kinetics problems, and the last three options are allowed only in NODAL type problems. If Word 2 is not entered, a default value is assumed. If the kinetics type is POINT, the default is SEPARABL. If the kinetics type is NODAL, the default is RAMONA. If SEPARABL is entered, reactor kinetics feedback due to moderator fluid density, void fraction weighted moderator fluid temperature, and volume average fuel temperature is assumed to be separable, and feedback data are entered on Cards 30000501 through 30000899. If TABLE3, TABLE4, TABLE3A, or TABLE4A is entered, reactivity is obtained from a table defining reactivity as a function of three or four variables using Cards 30001001 through 30002999. If TABLE3 or TABLE4 is entered, the variables are moderator fluid density, void fraction weighted moderator fluid temperature, volume average fuel temperature, and boron density. If TABLE3A or TABLE4A is entered, the variables are void fraction, liquid moderator temperature, volume average fuel temperature, and boron concentration. If TABLE3 or TABLE3A is entered, the first three of the variables in one of the sets defined above are used, and if TABLE4 or TABLE4A is entered, all four variables are used. If RAMONA is entered, cross-sections including feedback and control rod effects are computed using a method from the RAMONA code and generalized in the TRAC-BD code. If HWR is entered, the cross-sections including feedback and control rod effects are computed using a formulation specified by the heavy water New Production Reactor project at Savannah River. The GEN cross-section

formulation is a more general formulation and the RAMONA and HWR can be manipulated into the GEN form. The RAMONA and HWR input options are retained for backward compatibility and user convenience but the code uses the GEN option internally for simplicity. The RBMK option is used for the graphite moderated, pressure tube type reactors developed by the former Soviet Union.

15.2 Card 30000001, Reactor Kinetics Information

This card is required in both point and nodal kinetics problems, but the format is slightly different between the two problem types in that Words 3 and 4 input different quantities.

15.2.1 Point Kinetics Format

W1(A) Fission product decay type. Enter NO-GAMMA for no fission product decay calculations, GAMMA for standard fission product decay calculations, or GAMMA-AC for fission product decay plus actinide decay calculations.

W2(R) Total reactor power (W). This is the sum of immediate (prompt and delayed neutrons) fission power, fission product decay power, and actinide decay power. Watts are used for both SI and British units. This quantity must be greater than 0.0.

W3(R) Initial reactivity (dollars). This quantity must be less than or equal to 0.0; if it is greater than 0.0, an input error will occur. If this quantity is greater than -1.0e-60 and less than or equal to 0.0, it will be reset to -1.0e-60 to avoid numerical difficulties. See Volume V, Section 4.9.

W4(R) Delayed neutron fraction divided by prompt neutron generation time, $\frac{\beta}{\Lambda}$ (s^{-1}). This quantity must be greater than 0.0.

W5(R) Fission product yield factor. This is usually 1.0 for best-estimate problems, and 1.2 has been used with ANS73 data for conservative mode problems. The factor 1.0 is assumed if this word is not entered.

W6(R) ^{239}U yield factor. This is the number of ^{239}U atoms produced per fission times any conservative factor desired. The factor 1.0 is assumed if this word is not entered.

W7(R) Fissions per initial fissile atom, ψ_g. Used in factor $G(t) = 1.0 + (3.24 \cdot 10^{-6} + 5.23 \cdot 10^{-10}t)\, T^{0.4}\psi_g$ to account for neutron capture in fission products when using the ANS79-1, ANS79-3, ANS94-1, ANS94-4, ANS05-1, or ANS05-4 option. This word is not allowed with the ANS73 option. Entering this quantity as a nonzero includes the G factor as part of the decay heat. The factor is not included if this quantity is not entered or is entered as

zero. Entering this word as a positive quantity indicates that the equation is to be used for shutdown time up to 10^4 s, and the table is to be used from that time on. Entering this word as a negative number indicates that the table is to be used for all shutdown times. Note that there is a discontinuity in G(t) when switching between the equation and the table. The standard indicates that the table can be used for all shutdown times and that would result in a higher neutron absorption capture effect. The magnitude of this quantity if nonzero must be greater than or equal to 1.0 and less than or equal to 3.0.

W8(R) Reactor operating time T. This quantity is the T in the expression given in W7 above. This word is not allowed with the ANS73 option. The unit for this quantity is given in the next word. If not entered or entered as zero, this quantity defaults to 52 wk. This quantity is used only if the power history data in Section 15.16 are not entered. When the power history data are entered, the reactor operating time is obtained from that data. When the power history data are not entered, an infinite operating time is assumed in initializing the decay heat variables, and if the equation form of G(t) is being used, the quantity in this word is used with the shutdown period t set to zero to determine the G factor at the start of the simulation. This quantity must be less than or equal to $1.2614 \cdot 10^8$ seconds.

W9(A) Units for W8 above. Must be SEC, MIN, HR, DAY, or WK. This word is not allowed with the ANS73 option.

W10(I) Shutdown trip. This trip is used to define the start of shutdown used in the G(t) computation (see Word 3 above) to account for neutron capture in fission products when using the ANS79-1, ANS79-3, ANS94-1, or ANS94-3 decay heat options. This word is not allowed for the ANS73 option.

15.2.2 Nodal Kinetics Format

W1(A) Fission product decay type. Enter NO-GAMMA for no fission product decay calculations, GAMMA for standard fission product decay calculations, or GAMMA-AC for fission product decay plus actinide decay calculations.

W2(R) Total reactor power (W). This is the sum of immediate (prompt and delayed neutrons) fission power, fission product decay power, and actinide decay power. Watts are used for both SI and British units.

W3(R) Delayed neutron fraction β. This number must be greater than 0.0 and less than 0.1.

W4(I) Number of delayed neutron groups. Must be greater than 0 and less than 50.

W5(R) Fission product yield factor. This is usually 1.0 for best-estimate problems, and 1.2 has been used with ANS73 data for conservative mode problems. The factor 1.0 is assumed if this word is not entered.

W6(R) ^{239}U yield factor. This is the number of ^{239}U atoms produced per fission times any conservative factor desired. The factor 1.0 is assumed if this word is not entered.

W7(R) Fissions per initial fissile atom, ψ_g. Used in factor $G(t) = 1.0 + (3.24x10^{-6} + 5.23x10^{-10}t)$ $T^{0.4}\psi_g$ to account for neutron capture in fission products when using ANS79-1, ANS79-3, ANS94-1, ANS94-4, ANS05-1, or ANS05-4 option. This word is not allowed with the ANS73 option. Entering this quantity as a nonzero includes the G factor as part of the decay heat. The factor is not included if this quantity is not entered or is entered as zero. Entering this word as a positive quantity indicates that the equation is to be used for shutdown time up to 10^4 s, and the table is to be used from that time on. Entering this word as a negative number indicates that the table is to be used for all shutdown times. Note that there is a discontinuity in G(t) when switching between the equation and the table. The standard indicates that the table can be used for all shutdown times and that would result in a higher neutron absorption capture effect. The magnitude of this quantity if nonzero must be greater than or equal to 1.0 and less than or equal to 3.0.

W8(R) Reactor operating time T. This quantity is the T in the expression given in W7 above. This word is not allowed with the ANS73 option. The unit for this quantity is given in the next word. If not entered or entered as zero, this quantity defaults to 52 wk. This quantity is used only if the power history data in Section 15.16 are not entered. When the power history data are entered, the reactor operating time is obtained from that data. When the power history data are not entered, an infinite operating time is assumed in initializing the decay heat variables, and if the equation form of G(t) is being used, the quantity in this word is used with the shutdown period t set to zero to determine the G factor at the start of the simulation. This quantity must be less than or equal to $1.2614 \bullet 10^8$ s.

W9(A) Units for W8 above. Must be SEC, MIN, HR, DAY, or WK. This word is not allowed with the ANS73 option.

W10(I) Shutdown trip. This trip is used to define the start of shutdown used in the G(t) computation (see Word 3 above) to account for neutron capture in fission products when using the ANS79-1, ANS79-3, ANS94-1, or ANS94-3 decay heat options. This word is not allowed for the ANS73 option.

15.3 Card 30000002, Fission Product Decay Information

This card is optional for POINT or NODAL problems if W1 of Card 30000001 contains GAMMA or GAMMA-AC. If this card is not entered, an approximation to the Proposed 1973 ANS Standard fission product data are used if default data are used. Two, five, six, eight, or ten data items may be entered on this card depending on the value of Word 1 on this card. Two data items may be entered for fission product types ANS73, ANS79-1, ANS94-1, or ANS05-1; five or eight data items may be entered for fission product type ANS79-3; and six or ten data items may be entered for fission product type ANS94-4 or

ANS05-4. If only five data items are entered for fission product type ANS79-3, the default number of decay heat groups (i.e., 23) is used for each of the three fissionable isotopes. If only six data items are entered for fission type ANS94-4 or ANS05-4, the default number of decay heat groups (i.e., 23) is used for each of the four fissionable isotopes.

W1(A) Fission product type. Enter ANS73, ANS79-1, ANS79-3, ANS94-1, ANS94-4, ANS05-1, or ANS05-4. If default fission product data are used, ANS73 specifies an approximation to the Proposed 1973 ANS Standard data; ANS79-1 specifies the 1979 Standard data for ^{235}U; ANS79-3 specifies the 1979 ANS Standard data for the three isotopes, ^{235}U, ^{238}U, and ^{239}Pu; ANS94-1 specifies the 1994 ANS Standard data for ^{235}U; and ANS94-4 specifies the 1994 ANS Standard data for the four isotopes ^{235}U, ^{238}U, ^{239}Pu, and ^{241}Pu; ANS05-1 specifies the 2005 ANS Standard data for ^{235}U; and ANS05-4 specifies the 2005 ANS Standard data for the four isotopes ^{235}U, ^{238}U, ^{239}Pu, and ^{241}Pu. ANS79-3, ANS94-4, and ANS05-4 also require that power fractions for each isotope be entered. If fission product data are entered, ANS73, ANS79-1, ANS94-1, and ANS05-1 specify only one isotope and ANS79-3, ANS94-4 and ANS05-4 specify three and four isotopes, respectively, and also require that the number of decay heat groups for each isotope be entered.

W2(R) Energy release per fission (MeV/fission). If not entered or zero, the default value of 200 MeV/fission is used.

The following data are required if ANS79-3 is entered as Word 1 on this card and should not be entered for the other decay heat options.

W3-W5(R) If ANS79-3 is specified in W1, the fraction of the power generated by fission of ^{235}U, ^{238}U, and ^{239}Pu must be entered in these three words. The sum of the fractions must add to one.

The following data items are optional if ANS79-3 is entered as Word 1 on this card and should not be entered for the other decay heat options.

W6-W8(I) Number of decay heat groups per isotope. If ANS79-3 is entered in W1 and default data are not being used, the number of decay groups for ^{235}U, ^{238}U, and ^{239}Pu must be entered in these words. The number of groups for each isotope must be less than or equal to 50.

The following data are required if ANS94-4 or ANS05-4 is entered as Word 1 on this card and should not be entered for the other decay heat options.

W3-W6(R) If ANS94-4 or ANS05-4 is specified in Word 1, the fraction of the power generated by fission of ^{235}U, ^{238}U, ^{239}Pu, and ^{241}Pu must be entered in these four words. The sum of the fractions must add up to one.

The following data items are optional if ANS94-4 or ANS05-4 is entered as Word 1 on this card and should not be entered for the other decay heat options.

W7-W10(I) Number of decay heat groups per isotope. If ANS94-4 or ANS05-4 is entered in Word 1 and default data are not being used, the number of decay groups for ^{235}U, ^{238}U, ^{239}Pu, and ^{241}Pu must be entered in these words. The number of groups for each isotope must be less than of equal to 50.

15.4 Card 30000003, Nodal Kinetics Control Information

This card is required for NODAL type problems.

W1(I) Number of nodal axial mesh intervals (i.e., mesh planes) in the z direction. This quantity must be greater than 0 and less than 100. The default value is 1.

W2(I) Number of nodal mesh intervals in the x direction on each mesh plane. This quantity must be greater than 0 and less than 100. If the following word is 0, this word is the number of rings of meshes surrounding the central mesh for hexagonal geometry.

W3(I) Number of nodal mesh intervals in the y direction on each mesh plane. A value of 0 indicates hexagonal geometry. This quantity must be greater than or equal to 0 and less than 100.

W4(I) Number of neutron groups. Only values of 2 and 4 are allowed and the default value is 2. This value must be 2 for the RBMK neutron cross section option.

W5(I) Number of thermal neutron groups. The default value is 1.

W6(I) Mesh symmetry flag. A value of 1 indicates that a full core is being simulated (this can be used for either Cartesian geometry or hexagonal geometry). Values of 2 or 4 indicate half and quarter symmetry for Cartesian geometry while values of 3 or 6 indicate third core or sixth core symmetry in hexagonal geometry. The default value is 1.

W7(I) Mesh plane exterior boundary condition flag. A value of 0 indicates a zero current boundary condition, a value of 1 indicates a zero flux boundary condition, a value of 2 indicates a non-reentrant current boundary condition, a value of 3 indicates a cyclic (rotational) boundary condition, and a value of 4 (only for Krylov solution algorithm) indicates that group-wise albedos should be entered on Card 30000021. The default value is 1.

W8(I) Mesh plane interior boundary condition flag. The values are the same as the exterior boundary condition flag. The default value is 0.

W9(I) Top axial boundary condition flag. The values are the same as the exterior boundary condition flag. The default value is 0.

W10(I) Bottom axial boundary condition flag. The values are the same as the exterior boundary condition flag. The default value is 0.

W11(I) Maximum number of thermal scattering iterations. The value must be greater than or equal to one and less than or equal to 100. Default value is 100.

W12(I) Maximum number of outer iterations per invocation of either the steady-state LSOR or transient LSOR solution modules. The value must be greater than or equal to one and less than or equal to 500. Default value is 500.

W13(I) Number of outer iterations between computation of nodal expansion method coupling coefficients for the LSOR solver. A value of 0 indicates that the coarse mesh diffusion method is to be used while a value greater than 0 indicates that the nodal expansion solution techniques is to be used. This value must be greater than or equal to zero and less than or equal to 50. If the order of the Chebyshev fission source extrapolation polynomial specified in the next word (Word 14) is greater than zero and this value is greater than zero, this value must be greater than the order of the Chebyshev fission source extrapolation polynomial (i.e.,Word 14). Default value is 0.

W14(I) Maximum order of Chebyshev fission source extrapolation polynomial for the LSOR solver. A value of 0 indicates that Chebyshev fission source extrapolation not be used while a value greater than 0 indicates that Chebyshev acceleration is to be used. If Chebyshev fission source extrapolation is used, the order of the polynomial must be greater than or equal to three and less than or equal to 20 (i.e., the minimum polynomial order is 3). Default value is 0.

W15(I) Number of outer iterations per transient time step for the LSOR solver. A value of 0 indicates that the convergence criteria are used to terminate the outer iterations each transient time step while a value greater than 0 indicates that a fixed number of outer iterations are to be used. This value must be greater than or equal to zero and less than or equal to 50. Default value is 0. The recommended option is to use the convergence criteria to terminate the outer iterations each time step and the use of a fixed number of iterations is strongly discouraged.

W16(I) Print control flag. A value of 0 indicates no printed output from the nodal kinetics model. A value of 1 indicates that four sections of nodal kinetics data are to be added to each major edit. The sections contain the control rod positions, the nodal kinetics zone powers and thermal hydraulic conditions, the axial and radial power distributions, and the neutron cross sections, neutron fluxes, and power densities. The individual sections of this printed output can be enabled or suppressed through the use of Cards 4 and 5. A value of 2

indicates that convergence information is to be written to the printed output for each iteration in the nodal kinetics solution of each time step and the output specified for a value of 1 is written to the printed output at the end of each time step. Values other than zero should be used with care since they produce voluminous output and can easily make extremely large output files. The value of 2 should only be used for debugging purposes.

W17(I) Kinetics solution algorithm flag. A value of 0 indicates that the LSOR (line successive over-relaxation) solution algorithm is to be used. A value of 1 indicates that the Krylov solution algorithm is to be used. The default value is 0.

W18(R) Value used in the figures for the multi-dimensional neutron kinetics model to specify that the node is not part of the kinetics solution domain. This number is used for error checking purposes, and must not be the same as any valid figure entry. The figures that use this value are the figures containing decimal numbers as opposed to the figures whose entries are integers. These figures are the initial power distribution figures (Cards 3005ZZ01 - 3005ZZ99), User Variable 1 figures (Cards 3006UU01 - 3006UU99), User Variable 2 figures (Cards 3007UU01 - 3007UU99), User Variable 3 figures (Cards 3008UU01 - 3008UU99), User Variable 4 figures (Cards 3009UU01 - 3009UU99), and Bundle Rotation figures (Cards 3010RR01 - 3010RR99). The default value is -1.0.

15.5 Card 30000004, Nodal Kinetics Control Parameters

This card is optional for NODAL type problems.

W1(R) Eigenvalue convergence criterion for the LSOR solver. Default value is 1.0×10^{-6}.

W2(R) Outer iteration L infinity norm convergence criterion for the LSOR solver. Default value is 1.0×10^{-6}.

W3(R) Outer iteration L2 norm convergence criterion for the LSOR solver. Default value is 1.0×10^{-5}.

W4(R) Inner iteration L2 norm convergence criterion for the LSOR solver. Default value is 1.0×10^{-3}.

W5(R) Outer iteration L2 relative error reduction criteria for NEM coupling coefficient update for the LSOR solver. Default value is 1.0×10^{-2}.

15.6 Card 30000005, Neutron Velocity Data

This card is required for NODAL type problems. Note that the units are cm/s rather than m/s.

W1(R) Group 1 neutron velocity (cm/s).

W2(R) Group 2 neutron velocity (cm/s).

W3(R) Group 3 neutron velocity (cm/s).

W4(R) Group 4 neutron velocity (cm/s).

15.7 Card 30000006, Prompt Neutron Fission Spectrum Data

This card is required for NODAL type problems. The values must sum to 1.

W1(R) Group 1 prompt neutron fission yield.

W2(R) Group 2 prompt neutron fission yield.

W3(R) Group 3 prompt neutron fission yield.

W4(R) Group 4 prompt neutron fission yield.

15.8 Card 30000007, Delayed Neutron Fission Spectrum Data

This card is optional for NODAL type problems. The values are the fission yields for the delayed neutron precursors by neutron energy group for each of the precursors. The values must sum to 1.0 within a relative error of 1.0×10^{-6} for each delayed neutron precursor groups.

W1(R) Group 1 delayed neutron precursor yield for delayed group 1.

W2(R) Group 2 delayed neutron precursor yield for delayed group 1.

W3(R) Group 1 delayed neutron precursor yield for delayed group 2.

W4(R) Group 2 delayed neutron precursor yield for delayed group 2.

15.9 Card 30000008, Xenon/Samarium Calculation Option

This card is optional for NODAL type problems. The first word is an integer flag that determines what type of Xenon/Samarium concentration calculation is performed. If this quantity is 0, no Xenon/Samarium calculation is performed. If this quantity is 1, equilibrium Xenon and Samarium are calculated in steady-state and frozen at that value for the transient. If this quantity is 2, equilibrium Xenon and Samarium are calculated in steady-state and permitted to vary during the transient. If this quantity is 3, equilibrium Xenon is calculated in steady-state and frozen at that value for the transient (no Samarium concentrations are calculated). If this quantity is 4, equilibrium Xenon is calculated in steady-state and permitted to vary during the transient (no Samarium concentrations are calculated). The second word is an integer flag that determines if the fast time option for the Xenon/Samarium calculations is invoked. If this quantity is 0, no fast time option is invoked. If this quantity is greater than 0 and less than 1000, then it

refers to the general table number that contains the multiplier to use for the fast time option. If this quantity is greater than 10000, then it refers to a control variable (value-10000) that provides the multiplier for the fast time option. W4 contains the fast time option for the decay heat computation.

W1(I) Xenon/Samarium calculation option. The default value is 0.

W2(I) Fast time calculation option for Xenon/Samarium. The default value is 0.

W3(R) Xenon/Samarium steady-state convergence adjustment parameter. The default value is 1.0.

W4(I) Fast time calculation option for decay heat. The default value is 0.

15.10 Card 30000009, Core Age Parameter

This card is optional for NODAL type problems. The value represents the burnup state of the core. Typical values are 0 for beginning of cycle (BOC), 1 for middle of cycle (MOC), and 2 for end of cycle (EOC).

W1(I) Core age parameter. Default value is 1.

15.11 Card 30000010, Krylov Solution Algorithm Information

This card is optional for NODAL type problems. It contains control information for the Krylov solution algorithm.

W1(I) Neutron precursor solution type. A value of 0 selects an explicit solution and a value of 1 selects an implicit solution. The default value is 1.

W2(I) Matrix preconditioner frequency. The variable is the maximum number of time steps between the computation of the Krylov matrix preconditioner. The default value is 0 (compute matrix preconditioner every time step).

W3(I) Maximum number of outer iterations per time step for the Krylov solver. A value of 0 means iterate to convergence. A value greater than 0 indicates to take a fixed number of outer iterations each time step. The default value is the value in W15 of Card 30000003.

W4(I) Number of intervals between nodal coupling coefficient computations for the Krylov solver. A value of 0 means no nodal coupling computation. The number of intervals specified by this word is interpreted as the number of iterations between the computation of the nodal coupling coefficients if the maximum number of outer iterations per time step specified in the previous word (Word 3) on this card is zero (i.e., terminate the outer iterations based on the convergence criteria). If the value of the previous word (Word 3) is greater than zero (i.e., terminate the outer iterations after a fixed number of iterations), the

number of intervals between the computation of the nodal coupling coefficients is interpreted as the number of time steps between the computation of the nodal coupling coefficients rather than the number of iterations between the computation of the nodal coupling coefficients. The default value is the value of Word 13 of Card 30000003.

W5(R) Theta value to neutron flux solution. Value must be greater than or equal to 0.5 and less than or equal to 1.0. A value of 1.0 means a fully implicit solution and a value of 0.5 indicates a Crank-Nicholson solution. The default value is 1.0.

W6(R) Outer iteration L2 norm convergence criteria for the Krylov solver. The default value is the value in W3 on Card 30000004.

W7(R) Outer iteration R2 norm convergence criteria for the Krylov solver. The default value is 1.0×10^{-3}.

W8(R) Outer iteration L infinity norm convergence criteria for the Krylov solver. The default value is the value of W2 on Card 30000004.

W9(R) NEM update convergence criteria for the Krylov solver. The default value is the value in W5 of Card 30000004.

W10(R) Eigenvalue convergence criteria for the Krylov solver. The default value is the value in W1 of Card 30000004.

W11(R) Initial value for the Wielandt shift used in the steady-state Krylov solver. The default value is 0.1.

W12(R) Wielandt shift parameter used in the steady-state Krylov solver. The default value is 0.04.

W13(I) Flag specifying the Krylov solution method. A value of 0 indicates that the BiCGSTAB algorithm will be utilized, and a value of 1 indicates that the GMRES algorithm will be utilized. The default value is 0.

W14(I) Maximum number of inner iterations for the Krylov solver in the range between 1 and 10. Note that for BiCGSTAB, this value is reset to 1 for transients. The default value is 5 for BiCGSTAB and 10 for GMRES (set on W13 of this card).

W15(I) Maximum number of GMRES solution vectors to store in the range between 1 and 100. If the number of inner iterations is larger than the maximum number of GMRES vectors, then “restarted GMRES” will be used. The default value is 10.

W16(I) Flag activating the TPEN nodal solution method for hexagonal geometries. A value of 0 indicates NEM will be used, and a value of 1 indicates TPEN will be used. The default value is 0.

W17(I) Flag activating the reactivity calculation. A value of 0 indicates no reactivity calculation will be performed, a value of 1 indicates that the total reactivity will be computed at each time step, and a value of 2 indicates that the total reactivity along with the individual reactivity feedback components will be computed at each time step. The default value is 0.

W18(I) Rod decusping option (currently only used with the TPEN nodal solver for hexagonal geometries). A value of 0 indicates no rod decusping algorithm will be utilized, a value of 1 indicates that homogeneous cross sections with intranode flux weighting will be utilized, and a value of 2 indicates that axial discontinuity factors will be utilized. The default value is 0.

W19(I) Number of fine meshes used for each axial node utilizing the rod decusping solution. Acceptable values are in the range of 1 to 20. The default value is 10.

15.12 Card 30000021, Group-wise Albedos for Krylov Solution

This card is only entered if the Krylov solution algorithm is activated and W7 - W10 on Card 30000003 is equal to 4. These values can be used for both cartesian and hexagonal geometries.

W1(R) Group 1 albedo for the outer radial boundary.

W2(R) Group 1 albedo for the bottom boundary.

W3(R) Group 1 albedo for the top boundary.

W4(R) Group 2 albedo for the outer radial boundary.

W5(R) Group 2 albedo for the bottom boundary.

W6(R) Group 2 albedo for the top boundary.

.....

15.13 Cards 30000101 through 30000199, Delayed Neutron Constants

If these cards are missing, constants for the six generally accepted delayed neutron groups (N_d) are supplied. Otherwise, two numbers for each delay group are entered, one or more pairs per card. Card numbers need not be consecutive. The number of pairs on these cards defines the number of delayed

neutron precursor groups. Up to 50 delayed neutron precursor groups (N_d) may be entered. The delayed neutron precursor yield ratios must sum to one within a relative error of 1.0×10^{-6}.

W1(R) Delayed neutron precursor yield ratio, f_i (= β_i/β).

W2(R) Delayed neutron decay constant, λ_i (s^{-1}).

15.14 Cards 30000201 through 30000299, Fission Product Decay Constants

These cards are not needed if W1 of Card 30000001 is NO-GAMMA. If this word is GAMMA or GAMMA-AC, data from these cards or default data are used to define fission product decay. If the cards are missing, data as defined in W1 of Card 30000002 are supplied. Up to 50 fission product groups may be entered. Data are entered on cards similarly to Cards 30000101 through 30000199. The factor in W5 of Card 30000001 is applied to the yield fractions.

W1(R) Fission product yield fraction.This word is $a_{\alpha_j}/\lambda_{\alpha_j}$ in Section 7.1.2 of Volume I of the manual. The fission product yield fraction (this word) divided by the energy release per fission (see Word 2 of Card 30000002) is the fraction of the total power associated with fission decay group α_j at t = 0.0 s.

W2(R) Fission product decay constant (s^{-1}). This word is λ_{α_j} in Section 7.1.2 of Volume I of the manual.

15.15 Cards 30000301 through 30000399, Actinide Decay Constants

These cards are not needed unless W1 of Card 30000001 is GAMMA-AC. If GAMMA-AC is entered, data from these cards or default data are used to define actinide decay. If the cards are missing, default data are supplied.

W1(R) Energy yield from ^{239}U decay (Mev).

W2(R) Decay constant of ^{239}U (s^{-1}).

W3(R) Energy yield from ^{239}Np (Mev).

W4(R) Decay constant of ^{239}Np (s^{-1}).

15.16 Cards 30000401 through 30000499, Power History Data

If these cards are not present, initial conditions for fission product and actinide groups are for steady-state operation at the power given in W2 of Card 30000001. This is equivalent to operation at that power for an infinite time. If these cards are present, the power history consisting of power and time duration is used to determine the fission product and actinide initial conditions. The power from gamma and actinide decay is assumed to be zero at the beginning of the first time duration. Data are entered in three-word, six-word, or seven-word sets, one or more sets per card. Card numbers need not be consecutive.

W1(R) Reactor power (W). This quantity is the total reactor power, that is, the sum of fission power and decay power, and must be $\geq$ 0. If a decay power obtained from the power history exceeds this quantity, the fission power is assumed to be 0.

W2(R) Time duration. Units are as given in next word. This quantity must be $\geq$ 0.

W3(A) Time duration units. Must be SEC, MIN, HR, DAY, or WK.

The following data are required if ANS79-3 is entered as Word 1 on Card 30000002 and should not be entered for the other decay heat options.

W4-W6(R) Power fractions. The power fractions for ^{235}U, ^{238}U, and ^{239}Pu must be entered in these words.

The following data are required if ANS94-4 or ANS05-4 is entered as Word 1 on Card 30000002 and should not be entered for the other decay heat options.

W4-W7(R) Power fractions. The power fractions for ^{235}U, ^{238}U, ^{239}Pu, and ^{241}Pu must be entered in these words.

15.17 Point Kinetics Feedback Input

Feedback information for point kinetics information are entered on the following cards. For steady-state computations in which constant power is desired, these cards can be omitted and the feedback reactivity will be zero.

15.17.1 Cards 30000011 through 30000020, Reactivity (or Scram) Curve or Control Variable Numbers

Reactivity (or scram) curves from the general tables (Cards 202TTTNN) or control variables that contribute to reactivity feedback are specified on these cards. These cards are not used if there are no references to reactivity contributions from general tables or control variables. Tables and control variables referenced must be defined. No error is indicated if reactivity curves are defined but not referenced on this

card, but memory space is wasted. Curve numbers, which are the TTT of the general table card number or control variable number code, are entered one or more per card. Card numbers need not be consecutive.

W1(I) Table or control variable number. Up to 20 numbers may be entered. Numbers from 1 through 999 indicate general table numbers. Numbers greater than 10000 indicate the control variable whose number is the entered number minus 10000.

15.17.2 Cards 30000501 through 30000599, Density Reactivity Table

This table is required if the SEPARABL option is being used and if Cards 30000701 through 30000799 are entered. One or more pairs of numbers are entered to define reactivity as a function of moderator density. The densities must be non-negative and must be entered in increasing magnitude. Data are entered one or more pairs per card, and card numbers need not be consecutive. Up to 100 pairs may be entered. The table uses linear interpolation for segments between table search argument values. For search arguments beyond the range of entered data, the end-point values are used.

W1(R) Moderator density (kg/m^3, lb_m/ft^3), ρ.

W2(R) Reactivity (dollars), R_ρ. See Volume I of this manual for a discussion of the symbols.

15.17.3 Cards 30000601 through 30000699, Doppler Reactivity Table

This table is required if the SEPARABL option is being used and if Cards 30000801 through 30000899 are entered. One or more pairs of numbers are entered to define Doppler reactivity as a function of heat structure volume average fuel temperature. The temperatures must be positive and must be entered in increasing magnitude. Heat structure composition data Cards 1CCCG201 through 1CCCG209 need to exclude the gap and the cladding for the heat structure volume average fuel temperatures. Data are entered one or more pairs per card, and card numbers need not be consecutive. Up to 100 pairs may be entered. The table uses linear interpolation for segments between table search argument values. For search arguments beyond the range of entered data, the end-point values are used.

W1(R) Fuel temperature (K, ^oF), T_F.

W2(R) Reactivity (dollars), R_F. See Volume I of this manual for a discussion of the symbols.

15.17.4 Cards 30000701 through 30000799, Volume Weighting Factors and Coefficients

These cards are used only if the SEPARABL option is being used and are omitted if no reactor kinetics feedback from hydrodynamic volumes is present. Each card contains the input for reactivity feedback due to conditions in one or more hydrodynamic volumes. Words 1 and 2 are a volume number and a volume number increment. Words 3 and 4 are the reactivity data for the volume defined by Word 1; Words 5 and 6 are the reactivity data for the volume defined by Word 1 plus Word 2; Words 7 and 8 are the reactivity data for the volume defined by Word 1 plus two times Word 2; etc. Each card must contain at

least four words. Volumes referenced by these cards must be defined by hydrodynamic component data cards, and any volume reactivity data must be defined only once on these cards. Card numbers need not be consecutive.

Usually, Word 4 is zero. If the reactivity is linear in density, one should use the table (with weighting factors) or the coefficients, but not both. If the reactivity is nonlinear in density, the table (with weighting factors) should be used. If the coefficients (i.e., Word 4) are non-zero, the reactivity coefficients derived from the density table should be zero.

W1(I) Hydrodynamic volume number. A volume number less that 1000000 indicates that this instance of RELAP5-3D is participating as the server process in a coupled simulation using the PVM kinetics coupling methodology. The conditions in volumes numbered less than 1000000 are obtained from the process serving as the client process in PVM kinetics coupling. The volume numbers for these coupled volumes must be mapped in the input file for the PVMEXEC program to real volumes in the client process.

W2(I) Hydrodynamic volume number increment (normally 10000 for a one-dimensional volume and normally 10 for a multi-dimensional volume).

W3(R) Volume weighting factor for density feedback for the i-th hydrodynamic volume, $W_{\rho i}$. See Volume I of this manual for a discussion of the symbols. This word must be greater than zero.

W4(R) Volume fluid temperature coefficient for the i-th hydrodynamic volume, a_{Wi} (dollars/K, dollars/^{o}F). As defined in Volume I, the weighting factor in Word 3 is not applied to this quantity.

15.17.5 Cards 30000801 through 30000899, Heat Structure Weighting Factors and Coefficients

These cards are used only if the SEPARABL option is being used and are omitted if no reactor kinetics feedback from heat structures is present. Each card contains the input for reactivity feedback due to conditions in one or more heat structures representing fueled portions of the reactor. Words 1 and 2 are a heat structure number and an increment. Words 3 and 4 are the reactivity data for the heat structure defined by Word 1; Words 5 and 6 are the reactivity data for the heat structure defined by Word 1 plus Word 2; Words 7 and 8 are the reactivity data for the heat structure defined by Word 1 plus two times Word 2; etc. Each card must contain at least four words. Heat structures referenced by these cards must be defined by heat structure component data cards, and any heat structure reactivity data must be defined only once on these cards. Card numbers need not be consecutive.

For each heat structure specified on these cards, input on the heat structure data Cards 1CCCG2NN must define the fueled region as the region over which the volume-average temperature is computed.

Usually, Word 4 is zero. If the reactivity is linear in fuel temperature, one should use the table (with weighting factors) or the coefficients, but not both. If the reactivity is nonlinear in fuel temperature, the table (with weighting factors) should be used. If the coefficients (i.e., Word 4) are non-zero, the reactivity coefficients derived from the Doppler table should be zero.

W1(I) RELAP5-3D© heat structure number. A heat structure number less than 10000 indicates that this instance of RELAP5-3D is participating as the server process in a coupled simulation using the PVM kinetics coupling methodology. The conditions in heat structures numbered less than 10000 are obtained from the process serving as the client process in PVM kinetics coupling. The heat structure numbers for these coupled heat structures must be mapped in the input file for the PVMEXEC program to real heat structures in the client process.

W2(I) Increment.

W3(R) Heat structure weighting factor for Doppler feedback for the i-th heat structure, W_{Fi}. See Volume I of this manual for a discussion of the symbols. This word must be greater than zero.

W4(R) Heat structure fuel temperature coefficient for the i-th heat structure, a_{Fi} (dollars/K, dollars/^{o}F). As defined in Volume I, the weighting factor in Word 3 is not applied to this quantity.

15.17.6 Cards 30001701 through 30001799, Volume-Weighting Factors

These cards are used only if the TABLE3, TABLE3A, TABLE4, or TABLE4A option is being used. Each card contains the weighting factor for reactivity feedback due to moderator fluid density (void fraction), void weighted moderator fluid temperature (liquid moderator temperature), and spatial boron density (boron concentration) in one or more hydrodynamic volumes. The quantities preceding the quantities within parentheses are used if TABLE3 or TABLE4 has been entered; the quantities within parentheses are used if TABLE3A or TABLE4A has been entered. The same factor is assumed to apply to all three effects, so only one factor is entered for each value. At least three quantities must be entered on each card. The use of the increment field is similar to that in Section 15.17.4.

W1(I) Hydrodynamic volume number. A volume number less that 1000000 indicates that this instance of RELAP5-3D is participating as the server process in a coupled simulation using the PVM kinetics coupling methodology. The conditions in volumes numbered less than 1000000 are obtained from the process serving as the client process in PVM kinetics coupling. The volume numbers for these coupled volumes must be mapped in the input file for the PVMEXEC program to real volumes in the client process.

W2(I) Hydrodynamic volume number increment (normally 10000 for a one-dimensional volume and normally 10 for a multidimensional volume).

W3(R) Weight factor, $W_{\rho i}$.

15.17.7 Cards 30001801 through 30001899, Heat Structure Weighting Factors

These cards are used only if the TABLE3, TABLE 3A, TABLE4, or TABLE4A option is being used. Each card contains the weighting factor for reactivity feedback due to heat structure volume average fuel temperature in one or more heat structures. At least three quantities must be entered on each card. The use of the increment field is similar to that in Section 15.17.4.

W1(I) RELAP5-3D© heat structure number. A heat structure less than 10000 indicates that this instance of RELAP5-3D is participating as the server process in a coupled simulation using the PVM kinetics coupling methodology. The conditions in heat structures numbered less than 10000 are obtained from the process serving as the client process in PVM kinetics coupling. The heat structure numbers for these coupled heat structures must be mapped in the input file for the PVMEXEC program to real heat structures in the client process.

W2(I) Increment.

W3(R) Weight factor, W_{Fi}.

15.17.8 Cards 300019C1 through 300019C9, Feedback Table Coordinate Data

If the TABLE3 or TABLE3A option is being used, the feedback table is a function of three variables: moderator fluid density or void fraction (C = 1), void fraction weighted moderator fluid temperature or liquid moderator temperature (C = 2), and heat structure volume average fuel temperature (C = 3). If the TABLE4 or TABLE4A option is being used, the feedback table is a function of four variables: the three above and spatial boron density or boron concentration (C = 4). Which variables are used depend on the feedback option used (see W2, Card 30000000 in Section 15.1). These cards define the coordinates of the table, and table values are entered (on Cards 30002001 through 30002999) for each point defined by all combinations of the coordinate values. The table size is the product of the number of coordinate values entered for each variable. At least 2 coordinate points must be entered, and up to 20 points may be entered for each variable. The table uses multi-dimensional interpolation for values between table coordinate values. For values beyond the range of the entered coordinate values, the end-point coordinate values are used. Coordinate values must be entered in increasing magnitude, one or more per card on one or more cards as desired. Card numbers need not be consecutive. The C in the parentheses above defines the C to be used in the card number.

W1(R) Coordinate value [kg/m^3, lb_m/ft^3 for moderator and spatial boron densities; K, ^oF for moderator and heat structure temperatures; void fractions and boron concentrations (mass of boron per mass of liquid) are dimensionless].

15.17.9 Cards 30002001 through 30002999, Feedback Table Data

Values defining the table are entered in pairs. The first is a coded number defining the position of the table entry. The second number is the table entry. One or more pairs may be entered on one or more cards as needed. Card numbers need not be consecutive. There is no required ordering for the coded number, but a coded number may be entered only once.

W1(I) Coded number. The coded number has the form ddmmffbb, where the letter pairs represent coordinate numbers of the independent variables of the table. The dd pair refers to moderator fluid density or void fraction, mm refers to void weighted moderator fluid temperature or liquid moderator temperature, ff refers to heat structure volume average heat structure temperature, and bb refers to spatial boron density or boron concentration. The paired numbers range from 00 to one less than the number of coordinate values for that variable. The 00 pair refers to the first coordinate value. If boron dependence is not included, bb is always 00. All table values must be entered. (A future version may allow gaps that are filled in by interpolation.)

W2(R) Table value.

15.18 Nodal Kinetics Feedback Input

The description of the nodal kinetics mesh assumes a reactor core divided into axial slices with the stack of mesh planes starting at the bottom of the core and extending upward. This assumption is for descriptive purposes only and no orientation is built into input processing.

15.18.1 Cards 30010101 through 30010199, Bottom-Top (Z) Mesh Intervals

Axial mesh intervals (axial plane heights) starting from the bottom and extending to the top of the core are entered in sequential expansion format on these cards. The number of intervals after expansion must equal W1 of Card 30000003. The sequential expansion input consists of pairs of numbers with the last mesh interval number equalling W1 of Card 30000003. Pairs of words are entered as needed.

W1(R) Mesh interval (m, ft).

W2(I) Kinetics mesh interval number.

15.18.2 Cards 30010201 through 30010299, West-East (X) Mesh Intervals or Hexagonal Mesh Size

For Cartesian geometry, enter mesh intervals (node size in the x direction) starting from the left side of the axial slice as viewed from the top of the reactor core and extending to the right side of the axial slice are entered in sequential expansion format on these cards. The number of intervals after expansion must equal W2 of Card 30000003. The sequential expansion input consists of pairs of numbers with the last mesh interval number equalling W2 of Card 30000003. Pairs of words are entered as needed. For

hexagonal geometry, a single pair of numbers is entered because all meshes (nodes) in hexagonal geometry are assumed to be the same size. The kinetics mesh interval number entered must have a value of one. The first word on this card is the distance between opposite faces of the hexagonal node (see Figure 7.2-1 of Volume I).

W1(R) Mesh interval (m, ft).

W2(I) Kinetics mesh interval number.

15.18.3 Cards 30010301 through 30010399, North-South (Y) Mesh Intervals

For Cartesian geometry, mesh intervals (node size in the y direction) starting from the top of the axial slice as viewed from the top of the reactor and extending down to the bottom of the axial slice are entered in sequential expansion format on these cards. The number of intervals after expansion must equal W3 of Card 30000003. The sequential expansion input consists of pairs of numbers with the last mesh interval number equalling W3 of Card 30000003. Pairs of words are entered as needed. This card is not used for hexagonal geometry and must not be entered.

W1(R) Mesh interval (m, ft).

W2(I) Kinetics axial mesh interval number.

15.18.4 Cards 30010401 through 30010499, Assignment of Zone Figures to Axial Mesh Intervals

Mesh intervals for the nodal kinetics calculation (node height) are usually smaller than for the hydrodynamic mesh (hydrodynamic volumes) in the axial direction. Zone figures are the first step used to relate the kinetics nodes to the hydrodynamic volumes and heat structures. A figure is a diagram of the layout of the kinetics nodes on a mesh plane when viewing the mesh plane from the top of the kinetics mesh. This input assigns zone figures to axial mesh intervals (x-y planes) starting from the bottom and extending to the top of the kinetics mesh using sequential expansion format. The next set of input assigns composition figures to axial mesh intervals (x-y planes) starting from the bottom and extending to the top of the kinetics mesh using sequential expansion format. The input then assigns zone identifiers to each kinetics node in the (x-y plane) zone figures, composition identifiers to each kinetics node in the (x-y plane) composition figures, and control rod identifiers for each kinetics node (same for each x-y plane). Each zone must contain only contiguous kinetics mesh intervals. Each zone must have a unique zone number, but the zone numbers need not be sequential or even be in increasing order. Pairs of words are entered as needed with the last mesh interval number equaling Word 1 of Card 30000003.

W1(I) Zone figure number. A zone figure number must be greater than 0 and less than 100.

W2(I) Kinetics axial mesh interval number.

15.18.5 Cards 30010501 through 30010599, Assignment of Composition

Figures to Axial Mesh Intervals

Composition figures are assigned to kinetics axial mesh intervals (x-y planes) starting from the bottom and extending to the top of the core using sequential expansion format. There are no restrictions on the assignment of composition figures to mesh intervals and intervals in the same zone may have different compositions.

W1(I) Composition figure number. A composition figure number must be greater than 0 and less than 100.

W2(I) Kinetics axial mesh interval number.

.....

15.18.6 Cards 30010600, User Variable 1 Axial Distribution

This card is optional and may only be used if the RBMK feedback option has been specified as W2 on Card 30000000. The axial distribution of user variable 1 is specified in sequential expansion format as pairs of values, the first number representing a weighting factor and the second number representing the axial levels to which the weighting factor should be applied. If this card is input, only one figure of the values of user variable 1 is allowed in the input deck.

W1(R) Weighting factor.

W2(I) Kinetics axial mesh interval number.

.....

15.18.7 Cards 30010601 through 30010699, Assignment of User Variable 1 Figures to Axial Mesh Intervals

These cards are optional and may only be entered if the RBMK feedback option has been specified as W2 on Card 30000000. These cards may not be entered if Card 30010600 is entered and vice-versa. Figures of user variable 1 are assigned to axial mesh intervals (x-y planes) starting from the bottom and extending to the top of the core using sequential expansion format. There are no restrictions on the assignment of figures of user variable 1 to mesh intervals.

W1(I) User variable 1 figure number. A user variable 1 figure number must be greater than zero and less than 100.

W2(I) Kinetics axial mesh interval number.

.....

15.18.8 Cards 30010700, User Variable 2 Axial Distribution

This card is optional and may only be used if the RBMK feedback option has been specified as W2 on Card 30000000. The axial distribution of user variable 2 is specified in sequential expansion format as pairs of values, the first number representing a weighting factor and the second number representing the axial levels to which the weighting factor should be applied. If this card is input, only one figure of the values of user variable 2 is allowed in the input deck.

W1(R) Weighting factor.

W2(I) Kinetics axial mesh interval number.

.....

15.18.9 Cards 30010701 through 30010799, Assignment of User Variable 2 Figures to Axial Mesh Intervals

These cards are optional and may only be entered if the RBMK feedback option has been specified as W2 on Card 30000000. These cards may not be entered if Card 30010700 is entered and vice-versa. Figures of user variable 2 are assigned to axial mesh intervals (x-y planes) starting from the bottom and extending to the top of the core using sequential expansion format. There are no restrictions on the assignment of figures of user variable 2 to mesh intervals.

W1(I) User variable 2 figure number. A user variable 2 figure number must be greater than zero and less than 100.

W2(I) Kinetics axial mesh interval number.

.....

15.18.10 Cards 30010800, User Variable 3 Axial Distribution

This card is optional and may only be used if the RBMK feedback option has been specified as W2 on Card 30000000. The axial distribution of user variable 3 is specified in sequential expansion format as pairs of values, the first number representing a weighting factor and the second number representing the axial levels to which the weighting factor should be applied. If this card is input, only one figure of the values of user variable 3 is allowed in the input deck.

W1(R) Weighting factor.

W2(I) Kinetics axial mesh interval number.

.....

15.18.11 Cards 30010801 through 30010899, Assignment of User Variable 3 Figures to Axial Mesh Intervals

These cards are optional and may only be entered if the RBMK feedback option has been specified as W2 on Card 30000000. These cards may not be entered if Card 30010800 is entered and vice-versa. Figures of user variable 3 are assigned to axial mesh intervals (x-y planes) starting from the bottom and extending to the top of the core using sequential expansion format. There are no restrictions on the assignment of figures of user variable 3 to mesh intervals.

W1(I) User variable 3 figure number. A user variable 3 figure number must be greater than zero and less than 100.

W2(I) Kinetics axial mesh interval number.

.....

15.18.12 Cards 30010900, User Variable 4 Axial Distribution

This card is optional and may only be used if the RBMK feedback option has been specified as W2 on Card 30000000. The axial distribution of user variable 4 is specified in sequential expansion format as pairs of values, the first number representing a weighting factor and the second number representing the axial levels to which the weighting factor should be applied. If this card is input, only one figure of the values of user variable 4 is allowed in the input deck.

W1(R) Weighting factor.

W2(I) Kinetics axial mesh interval number.

.....

15.18.13 Cards 30010901 through 30010999, Assignment of User Variable 4 Figures to Axial Mesh Intervals

These cards are optional and may only be entered if the RBMK feedback option has been specified as W2 on Card 30000000. These cards may not be entered if Card 30010900 is entered and vice-versa. Figures of user variable 4 are assigned to axial mesh intervals (x-y planes) starting from the bottom and extending to the top of the core using sequential expansion format. There are no restrictions on the assignment of figures of user variable 4 to mesh intervals.

W1(I) User variable 4 figure number. A user variable 4 figure number must be greater than zero and less than 100.

W2(I) Kinetics axial mesh interval number.

.....

15.18.14 Cards 3002ZZ01 through 3002ZZ99, Assignment of Zones to Zone Figures

Thermal-hydraulic zones are assigned to kinetics nodes in zone figure ZZ (at each axial mesh x-y plane) starting from the upper left hand corner of the zone figure and proceeding to the right across each row in succession from the top row to the bottom row of kinetics nodes in the zone figure. There are no restrictions on the assignment of zones to kinetics nodes. All kinetics nodes in the zone figure must be assigned a zone number. A thermal-hydraulic zone number of zero means that the kinetics node is not included in the kinetics solution domain. The zeros in the zone figures must be assigned to the same locations in each zone figure. See the initial discussion in Volume I, Section 7.2 (including references 7.2-2. and 7.2-3.); Volume I, Section 7.2.6; and Section 4.9 of this appendix for the layout of kinetics nodes in a zone figure.

W1(I) Zone number for first kinetics node. A zone number must be less than 10000.

W2(I) Zone number for second kinetics node.

W3(I) Zone number for third kinetics node.

.....

15.18.15 Cards 3003CC01 through 3003CC99, Assignment of Compositions to Composition Figures

Compositions are assigned to kinetics nodes in composition figure CC (at each axial mesh x-y plane) starting from the upper left hand corner of the composition figure and proceeding to the right across each row in succession from the top row to the bottom row of kinetics nodes in the composition figure. There are no restrictions on the assignment of compositions to kinetics nodes. A composition number of zero means that the kinetics node is not included in the kinetics solution domain. The zeros in the composition figures must be consistent with the zeros in the first zone figure.

W1(I) Composition number for first kinetics node. A composition number must be less than 1000.

W2(I) Composition number for second kinetics node.

W3(I) Composition number for third kinetics node.

.....

15.18.16 Cards 3004MMMM, Assignment of Control Rod Groups to Kinetics Nodes

Control rod groups are assigned to node MMMM on an axial plane and the assignment is the same for all axial planes in the model. There are no restrictions on the assignment of rod groups to nodes and a rod group may be associated with more that one node.

W1(I) Identification number of first control rod group in kinetics node MMMM.

W2(I) Identification number of second control rod group in kinetics node MMMM.

15.18.17 Card 300500000, Kinetics Axial Plane Initial Power Distribution

This card is optional, and contains the initial guess for the prompt fission power distribution in the axial plane. The axial distribution of power is specified in sequential expansion format as pairs of values, the first value representing the fraction of the total prompt fission power generated in the kinetics nodes in the axial plane and the second value representing the axial level to which the power fraction should be applied. The prompt fission power specified for each axial plane is apportioned equally to all kinetics nodes in the plane (i.e., a flat radial power distribution in the x-y plane). If this card is input, cards 3005PPXX, specification of node initial power distribution for each kinetics node, and cards 300500XX, specification of the initial power distribution for each zone are not entered.

W1(R) Fraction of total fission power deposited in the axial mesh plane.

W2(I) Identification number of the axial plane.

15.18.18 Cards 30050001 through 30050099, Zone Initial Power Distribution

These cards are optional and contain the initial guess for the power distribution in the zones. A uniform power distribution is assumed if the cards are not entered. The data consists of pairs of data items, the first data item being the identification number of a zone and the second item being the fraction of the total reactor power (sum of fission and decay powers) which is deposited in the zone. A pair of data items must be entered for each zone specified in the zone figures but the zones may be entered in any order.

W1(I) Identification number of zone.

W2(R) Fraction of total reactor power deposited in the zone.

15.18.19 Cards 3005PP01 through 3005PP99, Kinetics Node Initial Power Distribution Figures

These cards are optional and contain the initial guess for the prompt fission power distribution for each kinetics node. Values are specified for each kinetics node in axial plane PP (PP must be greater than zero and less than or equal to the number of axial planes in the kinetics mesh) (Word 1 of Card 30000003) starting from the upper left hand corner of the mesh and proceeding to the right across each row in

succession from the top row to the bottom row of kinetics nodes in the mesh plane. The values specify the fraction of total prompt fission power generated in each kinetics node and must be greater than or equal to zero or equal to the value specified in Word 18 of Card 30000003. An input value equal to the value of Word 18 on Card 30000003 means. If these cards are input, card 30050000 and cards 30050001 through 30050099 are not input. The pattern of nodes with a value equal to the value of Word 18 on Card 30000003 in the power distributions must be consistent with the pattern of zeros in the first zone figure.

W1(R) Fraction of total fission power for first kinetics node.

W2(R) Fraction of total fission power for second kinetics node.

W3(R) Fraction of total fission power for third kinetics node.

.....

15.18.20 Cards 3006UU01 through 3006UU99, User Variable 1 Figures

These cards are allowed if the RBMK feedback option has been specified as W2 on Card 30000000. Values of user variable 1 are specified for each kinetics node in user variable 1 figure UU (figure identifier UU must be greater than or equal to 1 and less than or equal to 99) starting from the upper left hand corner of the figure and proceeding to the right across each row in succession from the top row to the bottom row of kinetics nodes in the figure. A value equal to the value of Word 18 on Card 30000003 designates that the node is not part of the kinetics solution domain. This value is not allowed in the interior of the solution domain. If the axial distribution of user variable 1 has been specified using Card 30010600, only one figure of user variable 1 is allowed. If figures of user variable 1 have been assigned to the axial mesh planes using Cards 30010601 through 30010699, one or more figures are allowed. The pattern of nodes with a value equal to the value of Word 18 on Card 30000003 must be consistent with the pattern of zeros in the first zone figure.

W1(R) Value of user variable 1 for first kinetics node.

W2(R) Value of user variable 1 for second kinetics node.

W3(R) Value of user variable 1 for third kinetics node.

.....

15.18.21 Cards 3007UU01 through 3007UU99, User Variable 2 Figures

These cards are allowed if the RBMK feedback option has been specified as W2 on Card 30000000. Values of user variable 2 are specified for each kinetics mesh in user variable 2 figure UU (figure identifier UU must be greater than or equal to 1 and less than or equal to 99) starting from the upper left hand corner of the figure and proceeding to the right across each row in succession from the top row to the bottom row of kinetics nodes in the figure. A value equal to the value of Word 18 on Card 30000003 designates that the

node in not part of the kinetics solution domain. This value is not allowed in the interior of the solution domain. If the axial distribution of user variable 2 has been specified using Card 30010700, only one figure of user variable 2 is allowed. If figures of user variable 2 have been assigned to the axial mesh planes using Cards 30010701 through 30010799, one or more figures are allowed. The pattern of nodes with a value equal to the value of Word 18 on Card 30000003 must be consistent with the pattern of zeros in the first zone figure.

W1(R) Value of user variable 2 for first kinetics node.

W2(R) Value of user variable 2 for second kinetics node.

W3(R) Value of user variable 2 for third kinetics node.

.....

15.18.22 Cards 3008UU01 through 3008UU99, User Variable 3 Figures

These cards are allowed if the RBMK feedback option has been specified as W2 on Card 30000000. Values of user variable 3 are specified for each kinetics mesh in user variable 3 figure UU (figure identifier UU must be greater than or equal to 1 and less than or equal to 99) starting from the upper left hand corner of the figure and proceeding to the right across each row in succession from the top row to the bottom row of kinetics nodes in the figure. A value equal to the value of Word 18 on Cards 30000003 designates that the node is not part of the kinetics solution domain. This value is not allowed in the interior of the solution domain. If the axial distribution of user variable 1 has been specified using Card 30010800, only one figure of user variable 3 is allowed. If figures of user variable 3 have been assigned to the axial mesh planes using Cards 30010801 through 30010899, one or more figures are allowed. The pattern of nodes with a value equal to the value of Word 18 on Card 30000003 must be consistent with the pattern of zeros in the first zone figure.

W1(R) Value of user variable 3 for first kinetics node.

W2(R) Value of user variable 3 for second kinetics node.

W3(R) Value of user variable 3 for third kinetics node.

.....

15.18.23 Cards 3009UU01 through 3009UU99, User Variable 4 Figures

These cards are allowed if the RBMK feedback option has been specified as W2 on Card 30000000. Values of user variable 4 are specified for each kinetics node in user variable 4 figure UU (figure identifier UU must be greater than or equal to 1 and less than or equal to 99) starting from the upper left hand corner of the figure and proceeding to the right across each row in succession from the top row to the bottom row of kinetics nodes in the figure. A value equal to the value of Word 18 on Card 30000003 designates that the

node is not part of the kinetics solution domain. This value is not allowed in the interior of the solution domain. If the axial distribution of user variable 4 has been specified using Card 30010900, only one figure of user variable 4 is allowed. If figures of user variable 4 have been assigned to the axial mesh planes using Cards 30010901 through 30010999, one or more figures are allowed. The pattern of nodes with a value equal to the value of Word 18 on Card 30000003 must be consistent with the pattern of zeros in the first zone figure.

W1(R) Value of user variable 4 for first kinetics node.

W2(R) Value of user variable 4 for second kinetics node.

W3(R) Value of user variable 4 for third kinetics node.

.....

15.18.24 Cards 30100001 through 30100099, Bundle Rotation Figure

These cards are optional. The values specify the angle of rotation of the bundle relative to the orientation specified as part of the composition coefficients. Values are entered starting from the upper left hand corner of the figure and proceeding to the right across each row in succession for the top row to the bottom row. Values equal to the value of Word 18 on Cards 30000003 are ignored and signify that the mesh box is not part of the computational domain. The pattern of values equal to the value of Word 18 on Card 30000003 must be consistent with the pattern of zeros in the first zone figure. The rotations are clockwise rotations when viewed from the top of the kinetics mesh and are applied to the discontinuity factors for the composition specified in each mesh location. The allowed values for Cartesian geometry are 0.0, 90.0, 180.0, and 270.0. The allowed values for hexagonal geometry are 60.0, 120.0, 180.0, 240.0, and 300.0. Default values are zero. A rotation of 90.0 degrees means that the discontinuity factor specified for the y+ direction in the composition coefficients is applied to the x+ direction, the discontinuity factor specified for the x+ direction in the composition coefficients is applied to the y- direction, the factor specified for the y- direction in the composition coefficients is applied to the x- direction, and the factor specified for the x- direction is applied to the y+ direction. Similar rotations are applied for hexagonal geometry where the u+ discontinuity factor is applied to the x+ direction, etc.

W1(R) Rotation angle for first kinetics mesh.

W2(R) Rotation angle for second kinetics mesh.

.....

15.18.25 Neutron Cross-Section Data for RAMONA Option

The following cards are entered if the RAMONA option is specified as W2 of Card 30000000.

15.18.25.1 Cards 31ZZZZ101 through 31ZZZZ199, Volume Feedback Factors. These cards assign hydrodynamic volumes to zone ZZZZ for computing averaged properties needed to compute cross-section information for the one-dimensional steady-state and kinetics advancement using the RAMONA option. The hydrodynamic volumes in this zone should be at the same axial levels as the kinetic mesh intervals in this zone. Each volume is usually in just one axial level, but volumes in contiguous axial levels can be entered. If the hydrodynamic mesh uses more than the axial dimension to represent the core, volumes in the horizontal plane but in the same axial levels may be entered. The above are recommendations. The input allows any hydrodynamic volume to be entered in any zone but volumes may not appear in more than one zone. Quadruplets of words are entered as needed.

W1(I) Volume number. A volume number less that 1000000 indicates that this instance of RELAP5-3D is participating as the server process in a coupled simulation using the PVM kinetics coupling methodology. The conditions in volumes numbered less than 1000000 are obtained from the process serving as the client process in PVM kinetics coupling. The volume numbers for these coupled volumes must be mapped in the input file for the PVMEXEC program to real volumes in the client process.

W2(R) Volume weighting factor for average vapor/gas fraction.

W3(R) Volume weighting factor for average fluid temperature.

W4(R) Volume weighting factor for average poison concentration.

.....

15.18.25.2 Cards 31ZZZZ201 through 31ZZZZ299, Heat Structure Feedback Factors. These cards assign heat structures to zone ZZZZ for computing averaged properties needed to compute cross-section information using the RAMONA option. The assigned heat structures are usually connected to the hydrodynamic volumes assigned to the same zone on Cards 31ZZZZ101 through 31ZZZZ199. However the input allows any heat structure to be entered. Pairs of words are entered as needed.

W1(I) Heat structure number. A heat structure less than 10000 indicates that this instance of RELAP5-3D is participating as the server process in a coupled simulation using the PVM kinetics coupling methodology. The conditions in heat structures numbered less than 10000 are obtained from the process serving as the client process in PVM kinetics coupling. The heat structure numbers for these coupled heat structures must be mapped in the input file for the PVMEXEC program to real heat structures in the client process.

W2(R) Heat structure weighting factor for average for average structure temperature.

.....

15.18.25.3 Card 320000000, Temperature Units. This card contains the temperature units code. The units code indicates the units of the reference temperatures. If this quantity is 1, the units are K, if 2, the units are ^{o}C, if 3, the units are ^{o}R, and if 4, the units are ^{o}F.

W1(I) Reference temperature units code. Default = 1.

15.18.25.4 Card 320000001, Composition Card Type. This card is optional and specifies, if present, the card number format for the composition data cards. The default format is 32CCCXXXX. This format allows up to 999 compositions (CCC) to be entered on the composition cards. The alternate card number format, 32CCCCXXX allows up to 9999 compositions (CCCC) to be entered on the composition cards.

W1(I) Enter 999 for card number format 32CCCXXXX or 9999 for card number format 32CCCCXXX.

15.18.25.5 Cards 32CCC0000 or 32CCCC000, Composition Reference Data. These cards contain the neutron yields and the reference temperatures.

W1(R) Moderator reference temperature. Default = 273.16 K.

W2(R) Fuel reference temperature. Default = 273.16 K.

W3(R) Group 1 neutron yield. Default = 2.5.

W4(R) Group 2 neutron yield. Default = 2.5.

W5(R) Group 3 neutron yield. Default = 2.5.

W6(R) Group 4 neutron yield. Default = 2.5.

15.18.25.6 Cards 32CCC0GN1 through 32CCC0GN9, Composition Coefficient Data. The nine factors defining cross-section type N in group G for composition CCC and the discontinuity factors for each face and group are entered on these cards. If data for a composition number are entered but not referenced on Cards 32CCCC0000, the data are read and checked but discarded. The units for each cross-section are denoted by the symbol U. Group 1 is the fast group and group 2 is the thermal group.

<u>N</u> <u>Cross-section type.</u>

1 Group diffusion coefficient. These cross sections are required for each neutron group (U_1 = cm).

2 Group macroscopic absorption cross-section. These cross sections are required for each neutron group (U_2 = cm^{-1}).

3 Group macroscopic fission cross-section. These cross sections are optional. Defaults values are zero (U_3 = cm^{-1}).

4 Group buckling. These parameters are optional. Defaults values are zero (U_4 = cm^{-2}).

5-7 Group macroscopic scattering cross-sections from group j into group g; j = 1,ng; $j \neq g$. These cross sectional are optional. Default values are zero (U_5 = cm^{-1}).

W1(R) a_1.

W2(R) a_2.

W3(R) a_3.

W4(R) a_4.

W5(R) a_5.

W6(R) a_6.

W7(R) a_7.

W8(R) a_8.

W9(R) a_9.

<u>N</u> <u>Cross-section type.</u>

8 Group discontinuity factors. These parameters are optional. Default values are one (U_8=-). (Six or eight doublets for Cartesian and hexagonal geometry respectively, each doublet representing the uncontrolled and controlled discontinuity factors for a node face, the faces being ordered y+,x+,y-,x-,z+,z- (i.e., N, E, S, W, UP, DOWN) for Cartesian geometry and u+,x+,v-,u-,x-,v+,z+,z- (i.e., NE, E, SE, SW, W, NW, UP, DOWN in **Figure 7.2-1** of Volume I) for hexagonal geometry.

W1(R) Discontinuity factor for face 1 (uncontrolled).

W2(R) Discontinuity factor for face 1 (controlled).

W3(R) Discontinuity factor for face 2 (uncontrolled).

W4(R) Discontinuity factor for face 2 (controlled).

.....

15.18.26 Neutron Cross-Section Data for HWR Option

The following cards are entered if the HWR option is specified as W2 of Card 30000000.

15.18.26.1 Card 310000000, Volume and Heat Structure Feedback Region Data. The number of volume feedback regions and the number of heat structure feedback regions in the neutron cross-section function for the HWR option are entered on this card.

W1(I) Number of volume feedback regions.

W2(I) Number of heat structure feedback regions.

15.18.26.2 Cards 31ZZZZ1N1 through 31ZZZZ1N9, Volume Feedback Weighting Factors. These cards assign volumes to volume feedback region N of zone ZZZZ. Volume feedback region variables are volume average fluid density, volume average fluid temperature, and volume average poison density. The value of N varies from 1 up to and including the value of W1 on Card 310000000. Quadruplets of words are entered as needed.

W1(I) Volume number. A volume number less that 1000000 indicates that this instance of RELAP5-3D is participating as the server process in a coupled simulation using the PVM kinetics coupling methodology. The conditions in volumes numbered less than 1000000 are obtained from the process serving as the client process in PVM kinetics coupling. The volume numbers for these coupled volumes must be mapped in the input file for the PVMEXEC program to real volumes in the client process.

W2(R) Volume weighting factor for average fluid density.

W3(R) Volume weighting factor for average fluid temperature.

W4(R) Volume weighting factor for average poison concentration.

.....

15.18.26.3 Cards 31ZZZZ2N1 through 31ZZZZ2N9, Heat Structure Feedback Weighting Factors. These cards assign heat structures to heat structure feedback region N of zone ZZZZ. The value of N varies from 1 up to and including the value of W2 on Card 310000000. The assigned heat structure are usually connected to the hydrodynamic volumes assigned to the same region in the same zone in Cards 31ZZZZ1N1 through 31ZZZZ1N9. However the input allows any heat structure to be entered. Pairs of words are entered as needed.

W1(I) Heat structure number. A heat structure less than 10000 indicates that this instance of RELAP5-3D is participating as the server process in a coupled simulation using the PVM kinetics coupling methodology. The conditions in heat structures numbered less than 10000 are obtained from the process serving as the client process in PVM kinetics coupling. The heat structure numbers for these coupled heat structures must be mapped in the input file for the PVMEXEC program to real heat structures in the client process.

W2(R) Heat structure weighting factor for average structure temperature.

15.18.26.4 Card 320000001, Composition Card Type. This card is optional and specifies, if present, the card number format for the composition data cards. The default format is 32CCCXXXX. This format allows up to 999 compositions (CCC) to be entered on the composition cards. The alternate card number format, 32CCCCXXX allows up to 9999 compositions (CCCC) to be entered on the composition cards.

W1(I) Enter 999 for card number format 32CCCXXXX or 9999 for card number format 32CCCCXXX.

15.18.26.5 Cards 32CCC0000 or 32CCCC000, Composition Neutron Yield Data. This card contains the neutron yields for composition CCC or composition CCCC.

W1(R) Group 1 neutron yield. Default = 2.5.

W2(R) Group 2 neutron yield. Default = 2.5.

W3(R) Group 3 neutron yield. Default = 2.5.

W4(R) Group 4 neutron yield. Default = 2.5.

15.18.26.6 Cards 32CCC0GN1 through 32CCC0GN9 or Card 32CCCC0GN, Neutron Base Cross-Section Data. These cards contain the base controlled and uncontrolled neutron cross-sections for cross-section type N in group G for composition CCC or composition CCCC. The units for each of the cross-sections is denoted by the symbol U.

<u>N</u> <u>Cross-section type.</u>

1 Group diffusion coefficient. These cross sections are required for each neutron group (U_1 = cm).

2 Group macroscopic absorption cross-section. The cross sections are required for each neutron group ($U_2 = cm^{-1}$).

3 Group macroscopic fission cross-section. These cross sections are optional. Defaults values are zero (U_3 = cm^{-1}).

4 Group buckling. These parameters are optional. Default values are zero (U_4 = cm^{-2}).

5-7 Group macroscopic scattering cross-sections from group j into group g; j=1, ng; $j \neq g$. These cross sections are optional. Default values are zero (U_5 = cm^{-1}).

W1(R) Base uncontrolled cross-section value (U_n).

W2(R) Base controlled cross-section value (U_n).

N Cross-section type.

8 Group discontinuity factors. These parameters are optional. Default values are one (U_8=-). [Six or eight doublets for Cartesian and hexagonal geometry, respectively, each doublet representing the uncontrolled and controlled discontinuity factors for a node face, the faces being ordered y+,x+,y-,x-,z+,z- (i.e., N, E, S, W, UP, DOWN) for Cartesian geometry and u+,x+,v-,u-,x-,v+,z+,z- (i.e., NE, E, SE, SW, W, NW, UP, DOWN in **Figure 7.2-1** of Volume I) for hexagonal geometry.]

W1(R) Discontinuity factor for face 1 (uncontrolled).

W2(R) Discontinuity factor for face 1 (controlled).

W3(R) Discontinuity factor for face 2 (uncontrolled).

W4(R) Discontinuity factor for face 2 (controlled).

.....

15.18.26.7 Cards 32CCC1GN1 through 32CCC1GN9 or Card 32CCCC1GN, Volume Region Temperature Data. These cards are optional for each cross section and buckling parameter and must not be entered for group discontinuity factors. Group discontinuity factors are only a function of control rod position. The cards contain the coefficients and reference temperatures for the volume region temperature terms in the neutron cross-section function for neutron cross-section N in group G for composition CCC or composition CCCC. Pairs of data are entered and the number of pairs must be equal to W1 on Card 310000000. Default values are zero.

W1(R) First volume region temperature coefficient (1/K).

W2(R) First volume region temperature reference value (K).

W3(R) Second volume region temperature coefficient (1/K).

W4(R) Second volume region temperature reference value (K).

.....

15.18.26.8 Cards 32CCC2GN1 through 32CCC2GN9 or Card 32CCCC2GN, Volume Region Poison Concentration Data. These cards are optional for each cross section and buckling parameter and must not be entered for group discontinuity factors. Group discontinuity factors are only a function of control rod position. The cards contain the coefficient and reference poison density for the volume region poison density terms in the neutron cross-section function for neutron cross-section N in group G for composition CCC or composition CCCC. Pairs of data are entered and the number of pairs must be equal to W1 on Card 310000000. Default values are zero.

W1(R) First volume region poison concentration coefficient (1/ppm).

W2(R) First volume region poison concentration reference value (ppm).

W3(R) Second volume region poison concentration coefficient (1/ppm).

W4(R) Second volume region poison concentration reference value (ppm).

.....

15.18.26.9 Cards 32CCC3GN1 through 32CCC3GN9 or Card 32CCCC3GN, Volume Region Fluid Density Data. There cards are optional for each neutron cross section and buckling parameter and must not be entered for group discontinuity factors. Group discontinuity factors are only a function of control rod position. The cards contain the linear and quadratic coefficients and the reference fluid density for the volume region fluid density terms in the neutron cross-section function for cross-section N in group G for composition CCC or composition CCCC. Triplets of data are entered and the number of triplets must be equal to W1 on Card 30100000. Default values are zero.

W1(R) First volume region fluid density linear coefficient [1/(kg/m^3)].

W2(R) First volume region fluid density quadratic coefficient [1/(kg/m^3)^2].

W3(R) First volume region fluid density reference value (kg/m^3).

W4(R) Second volume region fluid density linear coefficient [1/(kg/m^3)].

W5(R) Second volume region fluid density quadratic coefficient [1/(kg/m^3)^2].

W6(R) Second volume region fluid density reference value (kg/m^3).

.....

15.18.26.10 Cards 32CCC4GN1 through 32CCC4GN9 or Card 32CCCC4GN, Heat Structure Region Temperature Data. These cards are optional for each cross section and buckling parameter and must not be entered for group discontinuity factors. Group discontinuity factors are only a function of control rod position. The cards contain the coefficients and reference temperatures for the heat structure region temperature terms in the neutron cross-section function for neutron cross-section N in group G for composition CCC or composition CCCC. Pairs on values are entered and the number of pairs must be equal to W2 on Card 310000000. Default values are zero.

W1(R) First heat structure region coefficient (1/K).

W2(R) First heat structure region reference value (K).

W3(R) Second heat structure region coefficient (1/K).

W4(R) Second heat structure region reference value (K).

.....

15.18.27 Neutron Cross-Section Data for GEN Option

The following cards are entered if the GEN option is specified as W2 of Card 30000000

15.18.27.1 Card 310000000, Volume and Heat Structure Feedback Region Data. The number of volume feedback regions and the number of heat structure feedback regions in the neutron cross-section function for the GEN option are entered on this card.

W1(I) Number of volume feedback regions.

W2(I) Number of heat structure feedback regions.

15.18.27.2 Cards 31ZZZZ1N1 through 31ZZZZ1N9, Volume Feedback Weighting Factors. These cards assign volumes to volume feedback region N of zone ZZZZ. Volume feedback region variables are volume average fluid density or vapor/gas fraction, volume average fluid temperature, and volume average poison density. The value of N varies from 1 up to and including the value of W1 on Card 310000000. Quadruples of words are entered as needed.

W1(I) Volume number. A volume number less that 1000000 indicates that this instance of RELAP5-3D is participating as the server process in a coupled simulation using the PVM kinetics coupling methodology. The conditions in volumes numbered less than 1000000 are obtained from the process serving as the client process in PVM kinetics coupling. The volume numbers for these coupled volumes must be mapped in the input file for the PVMEXEC program to real volumes in the client process.

W2(R) Volume weighting factor for average fluid density or vapor/gas fraction.

W3(R) Volume weighting factor for average fluid temperature.

W4(R) Volume weighting factor for average poison density.

.....

15.18.27.3 Cards 31ZZZZ2N1 through 31ZZZZ2N9, Heat Structure Feedback Weighting Factors. These cards assign heat structures to heat structure feedback region N of zone ZZZZ. The value of N varies from 1 up to and including the value of W2 on Card 31000000. The assigned heat structures are usually connected to the hydrodynamic volumes assigned to the same region in the same zone in Cards 31ZZZZ1N1 through 31ZZZZ1N9. However the input allows any heat structure to be entered. Pairs of words are entered as needed.

W1(I) Heat structure number. A heat structure less than 10000 indicates that this instance of RELAP5-3D is participating as the server process in a coupled simulation using the PVM kinetics coupling methodology. The conditions in heat structures numbered less than 10000 are obtained from the process serving as the client process in PVM kinetics coupling. The heat structure numbers for these coupled heat structures must be mapped in the input file for the PVMEXEC program to real heat structures in the client process.

W2(R) Heat structure weighting factor for average structure temperature.

15.18.27.4 Card 320000000, GEN Options. This card contains the temperature units code, the density or vapor/gas fraction variable flag, and the structure temperature power flag, and the diffusion coefficient/transport cross-section flag. The units code indicates the units of the reference temperatures. If this quantity is 1, the units are K, if 2, the units are ^{o}C, if 3, the units are ^{o}R, and if 4, the units are ^{o}F. The density or vapor/gas fraction variable flag indicates whether the density or vapor/gas fraction variable in the neutron cross-section formulation is the mixture density (flag = 0) or the fluid vapor/gas fraction (flag = 1). The structure temperature power flag indicates whether the temperature (flag = 0) or the square root of the temperature (flag = 1) is used in the neutron cross-section formulation. The diffusion coefficient/transport cross-section flag determines whether the diffusion coefficient (flag = 0) or the transport cross-section (flag = 1) is entered.

W1(I) Reference temperature units code. Default = 1.

W2(I) Density or vapor/gas fraction variable flag. Default = 0.

W3(I) Structure temperature power flag. Default = 0.

W4(I) Diffusion coefficient/transport cross section flag. Default = 0.

15.18.27.5 Card 320000001, Composition Card Type. This card is optional and specifies, if present, the card number format for the composition data cards. The default format is 32CCCXXXX. This

format allows up to 999 compositions (CCC) to be entered on the composition cards. The alternate card number format, 32CCCCXXX allows up to 9999 compositions (CCCC) to be entered on the composition cards.

W1(I) Enter 999 for card number format 32CCCXXXX or 9999 for card number format 32CCCCXXX.

15.18.27.6 Card 32CCC0000 or Card 32CCCC000, Composition Neutron Yield Data. This card contains the neutron yields for composition CCC or composition CCCC.

W1(R) Group 1 neutron yield. Default = 2.5.

W2(R) Group 2 neutron yield. Default = 2.5.

W3(R) Group 3 neutron yield. Default = 2.5.

W4(R) Group 4 neutron yield. Default = 2.5.

15.18.27.7 Cards 32CCC0GN1 through 32CCC0GN9 or Card 32CCCC0GN, Neutron Base Cross-Section Data. These cards contain the base uncontrolled, controlled, and driver neutron cross-sections for neutron cross-section N in group G for composition CCC or composition CCCC. The units for each of the cross-sections is denoted by the symbol U.

N	Cross-section type.
1	Group diffusion coefficient/group macroscopic transport cross section. These cross sections are required for each neutron group (U_1 = cm)/(U_1 = cm^{-1}).
2	Group macroscopic absorption cross-section. These cross sections are required for each neutron group (U_2 = cm^{-1}).
3	Group macroscopic fission cross-section. These cross sections are optional. Default values are zero (U_3 = cm^{-1}).
4	Group buckling. These parameters are optional. Default values are zero (U_4 = cm^{-2}).
5-7	Group macroscopic scattering cross-sections from group j into group g; j = 1, ng; $j \neq g$. These cross sections are optional. Defaults values are zero (U_5 = cm^{-1}).

W1(R) Base uncontrolled cross-section value (U_n).

W2(R) Base active controlled cross-section value (U_n).

W3(R) Base driver controlled cross-section value (U_n).

N Cross-section type.

8 Group discontinuity factors. These parameters are optional. Default values are one (U_8=-). [Six or eight triplets for Cartesian and hexagonal geometry respectively, each triplet representing the uncontrolled, active controlled and driver controlled discontinuity factors for a node face, the faces being ordered y+,x+,y-,x-,z+,z- (i.e., N, E, S, W, UP, DOWN] for Cartesian geometry and u+,x+,v-,u-,x-,v+,z+,z- (i.e., NE, E, SE, SW, W, NW, UP, DOWN in **Figure 7.2-1** of Volume I) for hexagonal geometry.

W1(R) Discontinuity factor for face 1 (uncontrolled).

W2(R) Discontinuity factor for face 1 (active controlled).

W3(R) Discontinuity factor for face 1 (driver controlled).

W4(R) Discontinuity factor for face 2 (uncontrolled).

W5(R) Discontinuity factor for face 2 (active controlled).

W6(R) Discontinuity factor for face 2 (driver controlled).

.....

N Cross-section type.

9 Group corner point discontinuity factors. These parameters are optional and are only entered if the TPEN nodal method for the Krylov solution algorithm in hexagonal geometries is being utilized (W14 on Card 30000010). Default values are one. Six triplets are entered, with each triplet representing the uncontrolled, active controlled and driver controlled discontinuity factors for a node corner. The corners are ordered SW, NW, N, NE, SE, S.

W1(R) Discontinuity factor for corner 1 (uncontrolled).

W2(R) Discontinuity factor for corner 1 (active controlled).

W3(R) Discontinuity factor for corner 1 (driver controlled).

W4(R) Discontinuity factor for corner 2 (uncontrolled).

W5(R) Discontinuity factor for corner 2 (active controlled).

W6(R) Discontinuity factor for corner 2 (driver controlled).

.....

15.18.27.8 Cards 32CCC1GN1 through 32CCC1GN9 or Card 32CCCC1GN, Volume Region Temperature Data. These cards are optional for each cross section and buckling parameter and must not be entered for group discontinuity factors. Group discontinuity factors are only a function of control rod position. The cards contain the coefficients and reference temperatures for the volume region temperature terms in the neutron cross-section function for neutron cross-section N in group G of composition CCC or composition CCCC. Quadruplets of data are entered and the number of quadruplets must be equal to W1 on Card 310000000. Default values are zero.

W1(R) First volume region uncontrolled temperature coefficient (1/K).

W2(R) First volume region active controlled temperature coefficient (1/K).

W3(R) First volume region driver controlled temperature coefficient (1/K).

W4(R) First volume region temperature reference value (K).

W5(R) Second volume region uncontrolled temperature coefficient (1/K).

W6(R) Second volume region active controlled temperature coefficient (1/K).

W7(R) Second volume region driver controlled temperature coefficient (1/K).

W8(R) Second volume region temperature reference value (K).

.....

15.18.27.9 Cards 32CCC2GN1 through 32CCC2GN9 or Card 32CCCC2GN, Volume Region Poison Concentration Data. These cards are optional for each cross section and buckling parameter and must not be entered for group discontinuity factors. Group discontinuity factors are only a function of control rod position. The cards contain the coefficient and reference poison density for the volume region poison density terms in the neutron cross-section function for neutron cross-section N in group G for composition CCC or composition CCCC. Quadruplets of data are entered and the number of quadruplets must be equal to W1 on Card 310000000. Default values are zero.

W1(R) First volume region uncontrolled poison concentration coefficient (1/ppm).

W2(R) First volume region active controlled poison concentration coefficient (1/ppm).

W3(R) First volume region driver controlled poison concentration coefficient (1/ppm).

W4(R) First volume region poison concentration reference value (ppm).

W5(R) Second volume region uncontrolled poison concentration coefficient (1/ppm).

W6(R) Second volume region active controlled poison concentration coefficient (1/ppm).

W7(R) Second volume region driver controlled poison concentration coefficient (1/ppm).

W8(R) Second volume region poison density reference value (ppm).

.....

15.18.27.10 Cards 32CCC3GN1 through 32CCC3GN9 or Card 32CCCC3GN, Volume Region Fluid Density or Vapor/Gas Fraction Data. These cards are optional for each cross section and buckling parameter and must not be entered for group discontinuity factors. Group discontinuity factors are only a function of control rod position. The cards contain the linear and quadratic coefficients and the reference fluid density or vapor/gas fraction for the volume region fluid density or vapor/gas fraction terms in the neutron cross-section function for neutron cross-section N in group G for composition CCC or composition CCCC. Septuplets of data are entered and the number of septuplets must be equal to W1 on Card 310000000. Default values are zero.

W1(R) First volume region uncontrolled fluid density or vapor/gas fraction linear coefficient [1/(kg/m^3)].

W2(R) First volume region active controlled fluid density or vapor/gas fraction linear coefficient [1/(kg/m^3)].

W3(R) First volume region driver controlled fluid density or vapor/gas fraction linear coefficient [1/(kg/m^3)].

W4(R) First volume region uncontrolled fluid density or vapor/gas fraction quadratic coefficient [1/(kg/m^3)^2].

W5(R) First volume region active controlled fluid density or vapor/gas fraction quadratic coefficient [1/(kg/m^3)^2].

W6(R) First volume region driver controlled fluid density or vapor/gas fraction quadratic coefficient [1/(kg/m^3)^2].

W7(R) First volume region fluid density or vapor/gas fraction reference value (kg/m^3).

W8(R) Second volume region uncontrolled fluid density or vapor/gas fraction linear coefficient [1/(kg/m^3)].

W9(R) Second volume region active controlled fluid density or vapor/gas fraction linear coefficient [1/(kg/m^3)].

W10(R) Second volume region driver controlled fluid density or vapor/gas fraction linear coefficient [1/(kg/m^3)].

W11(R) Second volume region uncontrolled fluid density or vapor/gas fraction quadratic coefficient [1/(kg/m^3)^2].

W12(R) Second volume region active controlled fluid density or vapor/gas fraction quadratic coefficient [1/(kg/m^3)^2].

W13(R) Second volume region driver controlled fluid density or vapor/gas fraction quadratic coefficient [1/(kg/m^3)^2].

W14(R) Second volume region fluid density or vapor/gas fraction reference value (kg/m^3).

.....

15.18.27.11 Cards 32CCC4GN1 through 32CCC4GN9 or Card 32CCCC4GN, Heat Structure Region Temperature Data. These cards are optional for each cross section and buckling parameter and must not be entered for group discontinuity factors. Group discontinuity factors are only a function of control rod position. The cards contain the coefficients and reference temperatures for the heat structure region temperature terms in the neutron cross-section function for neutron cross-section N in group G for composition CCC or composition CCCC. Quadruplets of values are entered and the number of quadruplets must be equal to W2 on Card 310000000. Default values are zero.

W1(R) First heat structure region uncontrolled temperature coefficient (1/K).

W2(R) First heat structure region active controlled temperature coefficient (1/K).

W3(R) First heat structure region driver controlled temperature coefficient (1/K).

W4(R) First heat structure region temperature reference value (K).

W5(R) Second heat structure region uncontrolled temperature coefficient (1/K).

W6(R) Second heat structure region active controlled temperature coefficient (1/K).

W7(R) Second heat structure region driver controlled temperature coefficient (1/K).

W8(R) Second heat structure region temperature reference value (K).

.....

15.18.27.12 Card 340000000, Xenon/Samarium Decay Constants. This card is optional. The card contains the decay constants for iodine, xenon, and promethium.

W1(R) Decay constant for ^{135}I. Default = 2.929985x10^{-5} (1/s).

W2(R) Decay constant for ^{135}Xe. Default = 2.115385x10^{-5} (1/s).

W3(R) Decay constant for ^{149}Pm. Default = 3.626055x10^{-6} (1/s).

15.18.27.13 Cards 34CCC0000 or Card 34CCCC000, Composition Xenon/Samarium Fission Yield Data. These cards are optional. The cards contain the neutron yields for the important isotopes in the Xenon and Samarium decay chains.

W1(R) Fission yield for ^{135}I. Default = 0.063.

W2(R) Fission yield for ^{135}Xe. Default = 0.0007549.

W3(R) Fission yield for ^{149}Pm. Default = 0.01067.

W4(R) Fission yield for ^{149}Sm. Default = 0.0.

15.18.27.14 Cards 34CCC0GN1 through 34CCC0GN9 or Card 34CCCC0GN, Xenon/Samarium Neutron Base Cross-Section Data. These cards contain the base controlled and uncontrolled neutron cross-sections for neutron cross-section type N in group G for composition CCC. The units for each of the cross-sections is barns (1.0 x 10^{-24} cm^2).

N	Cross-section type
1	Group xenon microscopic absorption cross-section.
2	Group samarium microscopic absorption cross-section.
W1(R)	Base uncontrolled cross-section value (barns).
W2(R)	Base active controlled cross-section value (barns).
W3(R)	Base driver controlled cross-section value (barns).

15.18.27.15 Cards 34CCC1GN1 through 34CCC1GN9 or Card 34CCCC1GN Xenon/Samarium Volume Region Temperature Data. These cards contain the coefficients and reference temperatures for the volume region temperature terms in the neutron cross-section function for

neutron cross-section N in group G for composition CCC. Quadruplets of data are entered and the number of quadruplets must be equal to W1 on Card 310000000.

W1(R) First volume region uncontrolled temperature coefficient (1/K).

W2(R) First volume region active controlled temperature coefficient (1/K).

W3(R) First volume region driver controlled temperature coefficient (1/K).

W4(R) First volume region temperature reference value (K).

W5(R) Second volume region uncontrolled temperature coefficient (1/K).

W6(R) Second volume region active controlled temperature coefficient (1/K).

W7(R) Second volume region driver controlled temperature coefficient (1/K).

W8(R) Second volume region temperature reference value (K).

15.18.27.16 Cards 34CCC2GN1 through 34CCC2GN9 or Card 34CCCC2GN, Xenon/Samarium Volume Region Poison Concentration Data. These cards contain the coefficient and reference poison density for the volume region poison density terms in the neutron cross-section function for neutron cross-section N in group G for composition CCC. Quadruplets of data are entered and the number of quadruplets must be equal to W1 on Card 310000000.

W1(R) First volume region uncontrolled poison concentration coefficient (1/ppm).

W2(R) First volume region active controlled poison concentration coefficient (1/ppm).

W3(R) First volume region driver controlled poison concentration coefficient (1/ppm).

W4(R) First volume region poison concentration reference value (ppm).

W5(R) Second volume region uncontrolled poison concentration coefficient (1/ppm).

W6(R) Second volume region active controlled poison concentration coefficient (1/ppm).

W7(R) Second volume region driver controlled poison concentration coefficient (1/ppm).

W8(R) Second volume region poison density reference value (ppm).

15.18.27.17 Cards 34CCC3GN1 through 34CCC3GN9 or Card 34CCCC3GN, Xenon/Samarium Volume Region Fluid Density or Vapor/Gas Fraction Data. There cards contain the linear and quadratic coefficients and the reference fluid density or vapor/gas fraction for the volume region fluid density or vapor/gas fraction terms in the neutron cross-section function for neutron

cross-section N in group G for composition CCC. Septuplets of data are entered and the number of Septuplets must be equal to Word 1 on Card 310000000.

W1(R) First volume region uncontrolled fluid density or vapor/gas fraction linear coefficient [1/(kg/m^3)].

W2(R) First volume region active controlled fluid density or vapor/gas fraction linear coefficient [1/(kg/m^3)].

W3(R) First volume region driver controlled fluid density or vapor/gas fraction linear coefficient [1/(kg/m^3)].

W4(R) First volume region uncontrolled fluid density or vapor/gas fraction quadratic coefficient [1/(kg/m^3)^2].

W5(R) First volume region active controlled fluid density or vapor/gas fraction quadratic coefficient [1/(kg/m^3)^2].

W6(R) First volume region driver controlled fluid density or vapor/gas fraction quadratic coefficient [1/(kg/m^3)^2].

W7(R) First volume region fluid density or vapor/gas fraction reference value (kg/m^3).

W8(R) Second volume region uncontrolled fluid density or vapor/gas fraction linear coefficient [1/(kg/m^3)].

W9(R) Second volume region active controlled fluid density or vapor/gas fraction linear coefficient [1/(kg/m^3)].

W10(R) Second volume region driver controlled fluid density or vapor/gas fraction linear coefficient [1/(kg/m^3)].

W11(R) Second volume region uncontrolled fluid density or vapor/gas fraction quadratic coefficient [1/(kg/m^3)^2].

W12(R) Second volume region active controlled fluid density or vapor/gas fraction quadratic coefficient [1/(kg/m^3)^2].

W13(R) Second volume region driver controlled fluid density or vapor/gas fraction quadratic coefficient [1/(kg/m^3)^2].

W14(R) Second volume region fluid density or vapor/gas fraction reference value (kg/m^3).

15.18.27.18 Cards 34CCC4GN1 through 34CCC4GN9 or Card 34CCCC4GN, Xenon/Samarium Heat Structure Region Temperature Data. These cards contain the coefficients and reference temperatures for the heat structure region temperature terms in the neutron cross-section function for neutron cross-section N in group G for composition CCC. Quadruplets of values are entered and the number of quadruplets must be equal to W2 on Card 310000000.

W1(R) First heat structure region uncontrolled temperature coefficient (1/K).

W2(R) First heat structure region active controlled temperature coefficient (1/K).

W3(R) First heat structure region driver controlled temperature coefficient (1/K).

W4(R) First heat structure region temperature reference value (K).

W5(R) Second heat structure region uncontrolled temperature coefficient (1/K).

W6(R) Second heat structure region active controlled temperature coefficient (1/K).

W7(R) Second heat structure region driver controlled temperature coefficient (1/K).

W8(R) Second heat structure region temperature reference value (K).

.....

15.18.28 Neutron Cross Section Data for RBMK Option

The following tables list the composition numbers for fuel channels, non-fuel channels, and control rod channels in an RBMK reactor.

Table 15.18-1 Composition numbers for fuel channels.

Description	Composition Number
2.0% enriched fuel	9
2.4% enriched fuel	10
2.0% enriched fuel with Gadolinium	11

Table 15.18-2 Composition numbers for non-fuel channels.

Description	Composition Number
Axial detector channel (cps loop) RBMK 1000	2

Table 15.18-2 Composition numbers for non-fuel channels.

Description	Composition Number
Axial detector channel (cps loop) RBMK 1500	3
Water column in fuel channel (mcc loop)	6
Regular additional absorber (mcc loop)	7
Cluster additional absorber (mcc loop)	8
Radial reflector coolant channel	12
Graphite (radial reflector)	20
Void tube in mcc loop	22

Table 15.18-3 Composition number for control rod channels.

Description	Composition Number
Fast acting scram rod	1
Manual control rod 2091	4
Automatic rod	4
Short bottom control rod	5
Manual control rod 2477 (skirt type)	21
Manual control rod cluster rod	23

The following cards are entered if the RBMK option is specified as W2 of Card 30000000.

15.18.28.1 Card 310000000, Volume and Heat Structure Feedback Region Data. The number of volume regions and the number of heat structure regions in the neutron cross-section function for the USER option are entered on this card.

W1(I) Number of volume feedback regions.

W2(I) Number of heat structure feedback regions.

15.18.28.2 Cards 31ZZZZ1N1 through 31ZZZZ1N9, Volume Feedback Weighting Factors. These cards assign volumes to volume feedback region N of zone ZZZZ. Volume feedback region variables are volume average fluid density/void fraction, volume average fluid temperature, and volume average poison density. The value of N varies from 1 up to and including the value of W1 on Card 310000000. Quadruplets of words are entered as needed.

W1(I) Volume number.

W2(R) Volume weighting factor for average fluid density or vapor/gas fraction.

W3(R) Volume weighting factor for average fluid temperature.

W4(R) Volume weighting factor for average poison density.

.....

15.18.28.3 Cards 31ZZZZ2N1 through 31ZZZZ2N9, Heat Structure Feedback Weighting Factors. These cards assign heat structures to heat structure feedback region N of zone ZZZZ. The value of N varies from 1 up to and including the value of W2 on Card 31000000.The assigned heat structures are usually connected to the hydrodynamic volumes assigned to the same region in the same zone in Cards 31ZZZZ1N1 through 31ZZZZ1N9. However the input allows any heat structure to be entered. Pairs of words are entered as needed.

W1(I) Heat structure number.

W2(R) Heat structure weighting factor.

.....

15.18.28.4 Card 320000000, RBMK Thermal-hydraulic Options. This card contains the fluid density or vapor/gas fraction flag and the poison concentration/poison density flag. The fluid density/void fraction flag indicates whether the fluid density or vapor/gas fraction variable computed in the regions of the zones is the mixture density (flag = 0) or the vapor/gas fraction (flag = 1). The poison concentration/poison density flag indicate whether the poison variable computed by the code is the poison concentration (flag = 0) in ppm (parts per million) or is the poison density (flag = 1) in kg/m^3**.**

W1(I) Fluid density or vapor/gas fraction flag. Default = 0.

W2(I) Poison concentration/poison density flag. Default = 0.

15.18.28.5 Card 320000001, RBMK Neutronic Options.

This card contains the information required for the RBMK neutron cross section calculation, including the position of the top of the fuel relative to the bottom of the kinetics mesh and data required for the xenon power correction factors. Words 1 and 2 specify the neutron fission yields for the fast and thermal groups, respectively. Word 3 specifies the distance to the top of the fuel from the bottom of the kinetics mesh. This value is used to calculate the control rod positions relative to each node. Word 4 is a packed word that controls the following three RBMK modeling options: the control rod position reference, the xenon power correction factor, and the units of local burnup. Words 5 and 6 contain data for calculation of the xenon power correction factor, which adjusts the cross-sections for the effects of xenon poisoning. This correction is correlated to the relative power, which is defined as the ratio of the actual kinetics node power to the average power that would be present in the kinetics node if the core were operated at rated

power with the rated fuel loading. Calculation of this ratio requires the rated core power (W) and the total fuel volume at this rated core power and rated fuel loading.

The initial value for the xenon power correction factor is specified by inputting a guess for the initial power distribution. This guess is specified on Card 30050000 (the fraction of total core fission power in each axial plane), or Cards 30050001 through 30050099 (the fraction of total core power in each thermal-hydraulics zone), or Cards 3005ZZ01 through 3005ZZ99 (the fraction of total core fission power in each kinetics node). The calculation of the xenon power correction factor is different depending on the problem option specified on Card 100. If the problem option is STDY-ST, the initial power distribution guess, if input, is used to calculate the initial value for the xenon power correction factor, and the xenon power correction factor is updated for each advancement during the simulation. If the problem option is TRNSNT, the initial power distribution is used to calculate the xenon power correction factor, and this value is then considered to be a constant value (i.e., the xenon concentration change is negligible compared to the transient time of the simulation) that is used for the entire simulation. Note that the values of fission power for each kinetics node are written to the file specified by the -N parameter on the command line at the major edit frequency specified on Cards 201 through 299.

W1(R) Neutron fission yield for neutron group 1 (fast group). The default value is 2.5.

W2(R) Neutron fission yield for neutron group 2 (thermal group). The default value is 2.5.

W3(R) Location of the top of the active fuel relative to the bottom of the kinetics mesh (m, ft). The default location is the top of the kinetics mesh.

W4(I) User options for flags to control rod reference position, xenon power correction factor, input units for burnup, and neutron flux correction. This word has a packed format, and requires a number between 0 and 63. The first bit from the right is the control rod position flag. If set to on (i.e., Word 4 is 1 if the other bits are not set), it indicates that the control rod position reference specified in Cards 3300RRRR is at the top of the kinetics mesh as specified in Word 3 (of Card 320000001). Otherwise, the control rod position reference is the top of the active fuel. Note that if Word 4 is set to 1, the control rod position will be adjusted by the difference between the top of the kinetics mesh and Word 3. If Word 4 is set to zero, no adjustment is made.

The second bit from the right is the xenon power correction factor. If set to on (i.e., Word 4 is 2 if the other bits are not set), it specifies that the xenon power correction factor is to be used. Otherwise the xenon power correction factor is set to 1. Words 5 and 6 are required if the xenon power correction flag is on.

The third bit from the right is the burnup option. If set to on (i.e., Word 4 is 4 if the other bits are not set), specified burnup units are MW-days/fuel assembly. Otherwise, burnup units are MW-days/kg. Burnup values are entered in User Variable 1 (see Cards 30010600, 300106XX, and 3006UUXX).

The fourth bit from the right is the option to specify the neutron flux correction. If set to on (i.e. Word 4 is 8 if the other bits are not set), the neutron flux correction is performed, In this case, detector data are required to be entered (Cards 320001000, etc.).

The fifth bit from the right specifies which method of neutron flux correction is to be performed. If set to on (i.e., Word 4 is 16 if the other bits are not set), the correction is applied to the local burnup supplied in User Variable 1. If set to off (i.e. Word 4 is zero if the other bits are not set), the correction is applied to the Group 2 fission cross section. In either case, the corrections are output to a file named by the -P parameter on the command line (the default name for this file is “fluxdata”). If the correction is applied to the Group 2 fission cross-section, the file “fluxdata” contains these corrections and the last set of entries in this file should be entered in User Variable 2 (see Cards 30010700, 300107XX, and 3007UUXX) for reading during the subsequent transient calculation.

The sixth bit from the right specifies the information written to file “fluxdata” if the correction is applied to the local burnup. If set to on (i.e., Word 4 is 32 if the other bits are not set), the file “fluxdata” contains the corrected values of the local burnup, separated into axial and radial components, and the last set of entries in this file should replace the existing entries for burnup in User Variable 1. If set to off (i.e., Word 4 is zero if the other bits are not set), file “fluxdata” contains correction values to the local burnup, and the last set of entries in this file should be entered in User Variable 2 for reading during the subsequent transient calculation. If Word 4 is not entered, the default value is zero.

W5(R) Total volume occupied by the fuel nodes of the kinetics mesh at rated core power and rated fuel loading (cm^3, ft^3).

W6(R) Rated core power (W). This may or may not be the same as the value entered on Card 30000001. If this value is omitted, the value on Card 30000001 is used.

15.18.28.6 Card 320001000, Control Data for Neutron Flux Correction

This card specifies the parameters for the neutron flux correction procedure. It is required if the neutron flux correction is to be used, and is not allowed otherwise. Words 1, 2, and 3 specify the dimensions of the detector flux measurement data. Two types of flux detectors are present. The radial detectors (DKER) have a single data value. Word 1 specifies the number of locations for which the DKER data are specified. The axial detectors (DKEV) have values along the axial plane. Word 2 specifies the number of DKEV detectors for which data are input. Word 3 specifies the number of axial locations for DKEV data. Words 4 through 8 specify the control parameters for the flux correction procedure. Words 4 and 5 specify the minimum and maximum axial node, respectively, where the flux correction is to be performed. Word 6 specifies the maximum permitted amount of the correction (in percent). Word 7 is the control parameter for the flux correction, and Word 8 is the control parameter for the critical eigenvalue adjustment.

W1(I) Number of radial detectors for which data are input.

W2(I) Number of axial detectors for which data are input.

W3(I) Number of data locations for each axial detector. If a positive value is entered, the axial values for each detector are entered starting at the bottom of the mesh and proceeding upward. If a negative value is entered, the axial values for each detector are entered starting for the top of the mesh and proceeding downward.

W4(I) Minimum axial node for which the correction procedure is to be applied. This value should correspond to the first core node within the neutronics mesh.

W5(I) Maximum axial node for which the correction procedure is to be applied. This value should correspond to the last core node within the neutronics mesh.

W6(I) Maximum amount of correction that is permitted, as a fraction of the initial value. The default value is 0.04 if the correction is applies to the Group 2 fission cross-section, and is 0.10 if the correction is applied to local burnup.

W7(R) Control parameter for flux correction (default is 5.0×10^{-5}).

W8(R) Control parameter for critical eigenvalue adjustment (default is 4.0×10^{-3}).

15.18.28.7 Cards 32001101-320001199, Radial Detector Data

These cards specify the y and x locations for the radial detectors and the associated flux measurement data. Words 1 and 2 are the y and x locations within the neutronics mesh. The data will be normalized to the prompt fission power calculated by the code in the corresponding location of the mesh. Triplets of data must be entered, and the number of these triplets must be equal to Word 1 on Card 320001000.

W1(1) Detector y location.

W2(I) Detector x location.

W3(R) Detector flux value.

.....

15.18.28.8 Cards 320001201 - 320001299, Axial Detector Positions

These cards specify the y and x locations for the axial detectors. Words 1 and 2 are the y and x locations within the neutronics mesh. Pairs of data are entered, one for each axial detector.

W1(I) Detector y location.

W2(I) Detector x location.

.....

15.18.28.9 Cards 320001301 - 320001299, Axial Detector Data

Enter the appropriate number of data values for each detector, in the order that the y-x pairs are specified on Cards 320001201 through 320001299. If Word 3 on Card 320001000 is a positive number, the data are entered starting at the bottom of the mesh and proceeding upward. If Word 3 of Card 320001000 is a negative value, the data are entered starting at the top of the mesh and proceeding downward.

W1(R) First datum for the first axial detector.

W2(R) Second datum for the first axial detector.

15.19 Control Rod Model Data

These cards contain the data for the control rod model and are only input if the nodal kinetics model has been selected. These cards are optional.

15.19.1 Card 33000000, Global Control Rod Insertion Direction Data

This card is optional. This card specifies the insertion direction of all control rods. Use this card if all rods are inserted from the same face of the reactor.

W1(I) Insertion direction of all control rods. A value of zero means up from the bottom of the reactor core and a value of 1 means down from the top of the reactor core. Default value = 0.

15.19.2 Cards 3300RRRR, Control Rod Group Data

These cards contain data for control rod group RRRR. A control rod group consists of any number of physical control rods that move together, i.e., have the same initial insertion depth and are moved by the same control logic. This grouping can be used to reduce the amount of input data for control rods.

W1(R) Initial insertion depth of control rod group (m, ft). Default = 0.0.

W2(I) Control variable or general table from which the insertion depth of the control rod group is to be determined. The current insertion depth of the control rod group is the sum of the initial insertion depth of the control rod group (Word 1 on this card) and the output of this table or control variable. Note that the output of the table or control variable must be in code internal units, i.e., SI units. A positive value of less than 1000 means the general

table with this number is used to determine the insertion depth of the control rod group. If this value is between 10001 and 19999, the insertion depth of the control rod group is determined by the control variable whose identifier is this number minus 10000. A value of 0 specifies that the control rod group does not move and that it remains at its initial insertion depth. Default = 0.

W3(R) Active length of control rod (m, ft). A value of 0.0 denotes a full length control rod. Default = 0.0.

W4(I) Control variable or general table from which the rod worth multiplier for the control rod group is to be determined. A positive value less than 1000 means the general table with this number is used to determine the rod worth multiplier for the control rod group. If this value is between 10001 and 19999, the rod worth multiplier for the control rod group is determined by the control variable whose identifier is the number minus 10000. A value of 0 indicates no rod worth multiplier for the control rod group. Default = 0.

15.19.3 Card 3301RRRR, Control Rod Group Insertion Direction Data

These cards are optional. The value on this card specifies the insertion direction of control rod group RRRR. These cards may not be used if Card 33000000 is used to specify the insertion direction for all of the control rods.

W1(I) Insertion direction of rod group RRRR. A value of zero means up from the bottom of the reactor core and a value of 1 means down from the top of the reactor core. Default = 0.

15.20 Fixed Neutron Source Data

These cards contain the data for the fixed neutron source input and are only input if the nodal kinetics model has been selected.

15.20.1 Cards 35IIJJKKN, Fixed Neutron Source Input Option.

These cards assign neutron sources to node II, JJ, KK in the kinetics model, where II is the row index of the node in the axial plane, JJ is the column index of the node in the axial plane, and KK is the index of the axial plane. If entered, the card must contain a value for each energy group.

W1(R) Source value for the first energy group (neutrons/m^3). Default = 0.0.

W2(R) Source value for the second energy group (neutrons/m^3). Default = 0.0.

W3(R) Source value for the third energy group (neutrons/m^3). Default = 0.0.

W4(R) Source value for the fourth energy group (neutrons/m^3). Default = 0.0.

15.21 Nuclear Detector Model

15.21.1 Card 390DD0000, Detector Data

These cards are only required if a detector is to be modeled.

W1(I) Number of source nodes for detector DD. For nodal kinetics, this can be from 1 to the total number of nodes in the kinetics model. For point kinetics, this is usually 1.

W2(R) Scale factor.

15.21.2 Card 390DDSSS0, Source Data

These cards are required if Card 390DD0000 is present. One card is required for each source SSS.

W1(A) Variable code for the source term.

W2(I) Parameter for the first source term.

W3(R) Weighting factor for the first source term.

W4(I) Number of attenuation terms used in the attenuation model for this source.

15.21.3 Cards 390DDSSS1 through 390DDSSS9, Attenuation Data

These cards are required if Word 4 on Card 390DDSSS0 is greater than zero. The data are input as W4 (on Card 390DDSSS0) sets of four data items. Units conversion is performed for the reference value and the attenuation coefficient based on the independent variable.

W1(A) Variable code for the independent variable in the first attenuation term.

W2(I) Parameter for the independent variable in the first attenuation term.

W3(R) Reference value for the independent variable in the first attenuation term.

W4(R) Attenuation coefficient in the first attenuation term.

W5(A) Variable for the independent variable in the second attenuation term.

W6(I) Parameter for the independent variable in the second attenuation term.

W7(R) Reference value for the independent variable in the second attenuation term.

W8(R) Attenuation coefficient in the second attenuation term.

.....

16 Cards 1001 through 1999, Strip Request Data

These cards are required only in STRIP-type problems. One or more cards are entered, each card containing one variable request. Card numbers need not be consecutive. Variables are ordered on the STRIPF file in the order of increasing card numbers. If an incorrect variable request code is entered, the value will be 0.0. It is not flagged as an input error, since at some later time in the transient, a renodalization may result in the variable request code becoming correct.

W1(A) Alphanumeric (variable code) name of the variable request code.

W2(I) Numeric (parameter) part of the variable request code.

17 RELAP5-3D©-Based Code Operating Procedures

When operating on UNIX and LINUX systems, the RELAP5-3D©-based program can interpret a UNIX-style and LINUX-style command line. The command line below is written with all of the allowed options (prefixed by a minus sign), and each option is followed by its default value.

```
relap5.x -f ftb1 -i indta -o outdta -p plotfl -r restrt -s stripf -stat statfl -j jbinfo \

-n null -c cdffile -a coupfl -X -C 0 -A dumpfil1 -B dumpfil2 -R rpdacc  -N nodpower -P fluxdata \

-w tpfh2o -d tpfd2o -h tpfh2 -l tpfli -k tpfk -b tpfhe -e tpfn2 -m tpfna \

-q tpfnak -t tpflipb -u tpfnh3 -W tpfh2on -g tpfglyc -H tpfblood \

-L tpfbipb -S tpfh2o95 -G tpfco2 -M tpfhen -E tpfxen -J tpfhenxen \

-U tpfms1 -V tpfms2 -Y tpfms3 -Z tpfms4 -x tpfdowa -y tpfr134a -F r5-r5f
```

If an option and its parameter are not entered, the default is used. With the exception of the X option, an option character must always be followed with a file name, and an option may not be repeated. The f option specifies a scratch word addressable file used only on CRAY versions. This file is a word addressable file, and the I/O is done by CRAY library subroutines that have successfully resisted external open and close statements. This file is small and can fit in most directories. This file should be removed after execution, but no error occurs in subsequent calculations if it is not removed. The file indta contains input data, outdta contains printed output, plotfl contains plotter information, restrt is the restart file, and stripf is the strip file. The files dumpfil1 and dumpfil2 are files used to dump common and dynamic blocks for debugging purposes. The files beginning with tpf (e.g., tpfh2o) are thermodynamic property files where the characters following the tpf are chemical names of the material. The RELAP5-3D© code uses the light and heavy water (h2o and d2o) materials, the 1984 light water (h2on) material, the 1995 light water (h2o95) material, and other non-aqueous materials. The light water (h2o) material file tpfh2o must always be available even if h2o is not the working fluid for any of the systems. This is because h2o is used for volumes with incorrect initial conditions so as to complete the input processing. The file jbinfo is an optional file created by the user who wishes to place some additional information on his output file (such as a listing of the control cards used to run the job). The indta file must be available and the outdta file must not exist, or else a diagnostic message followed by immediate termination will follow. The restart file must not exist for a NEW problem and must exist for other types problems. Most of the other options are for operation with the Nuclear Plant Analyzer (NPA). The nodpower file is an output file containing the fission power in each kinetics node and is written when the multi-dimensional kinetics reactor power option is selected by the user and the -N parameter appears on the command line There is no default name for this file. The fluxdata file is an output file containing data generated by the neutron flux correction option of the RBMK neutron cross section model when the -P parameter appears on the command line and the neutron flux correction option is selected by the user. There is no default name for this file. The r5-r5f file is the R5FORCE file, which contains output that is needed by R5FORCE.

The command line capability eliminates the need to have all files needed for execution in the same directory or to copy/rename files to match the default names. For example, the command:

```
relap5.x -i myprob.i -o /usr/tmp/andena/myprob.o \

-r /usr/tmp/andena/myprob.r -w /u2/andena/relap5/tpfh2o
```

takes the executable file and input file from the current directory, uses a temporary disk for the output and restart files, and uses a water property file from a different directory.

For operating systems other than UNIX and LINUX, the default file names must be used.

Appendix B
User Guide for the PVM Coupling Interface

Appendix B
User Guide for the PVM Coupling Interface

1 Introduction

This document is the fourth in a series of reports that describe the Parallel Virtual Machine (PVM) coupling Application Programming Interface (API) and the code coupling system that was built using the PVM coupling API. The first report[1] describes the PVM coupling Application Programming Interface (API). The second report[2] describes the PVMEXEC program that controls and coordinates a coupled simulation. The third report[3] describes the implementation of the PVM coupling API in the RELAP5-3D© code. This report describes the PVM coupling interface from the users perspective and provides advice and recommendations as to how to use the coupling interface.

1.1 Background

The PVM API and PVMEXEC program were developed to facilitate the simulation of a system (e.g., a nuclear power plant) using several different computer programs to describe the transient behavior of the system. Simulation codes are generally written to provide detailed models of some portion of a system, i.e., COBRA[4], RELAP5-3D©[5], FLUENT[6], TRAC-PF1/MOD1[7], and TRACE[8] for the fluid systems, CONTAIN[9] and MELCOR[10] for the containment systems, NESTLE[11] and PARCS[12] for reactor power, etc. The PVM API, the PVMEXEC program, and the code coupling system that they implement enables the use of different codes for the simulation of different portions of the system in a unified analysis of the transient behavior of the system.

Each code in the coupled simulation needs data from some of the other codes in the simulation. The data are passed between the several codes using the Parallel Virtual Machine[13] (PVM) message passing methodology. All of the coupled codes may be executed on a single computer where the data communication between the codes is internal to the single computer or each code may be executed on its own computer where the data communication occurs over the network connecting the computers. The set of networked computers that are to perform a coupled computation becomes a virtual machine. The PVM message passing library contains all of the functionality needed to set up the virtual machine, execute each of the coupled codes on its designated node in the virtual machine, and provide the communication mechanism for data transfer between the several nodes of the virtual machine.

An executive program, PVMEXEC, has been developed to initiate the ‘virtual’ machine, startup the codes to be used in the coupled simulation, coordinate the data transfers between the coupled codes, and shutdown the virtual machine at the end of the coupled simulation. In addition, the PVMEXEC program monitors the status of each computer and each code executing on the virtual machine so that faults can be handled gracefully and so that the virtual machine might be shutdown once the simulation codes terminate, either normally or abnormally. The PVMEXEC program was originally developed to couple the RELAP5-3D© code to other thermal-hydraulic codes, however any code that implements the PVMEXEC API may be used in a coupled simulation.

This report is intended as a user guide and describes how to design, build, and execute a coupled simulation using codes that implement the coupling interface. The several different types of coupling will be illustrated using the installation test cases that are supplied with the distribution of RELAP5-3D© that includes the coupling methodology. These test cases were developed to verify that the different types of coupling had been implemented correctly by the PVMEXEC and RELAP5-3D© codes. All of these test cases use two instances of the RELAP5-3D© code coupled to each other.

The general organization of this report is as follows. First there will be a discussion of the basis of the coupling methodology. Then there will be a discussion of the different types of coupling. This will be followed by a discussion of general principles that apply to all forms of coupling. Next will be a discussion of the input for the PVMEXEC program. The input file for the PVMEXEC program contains all of the information describing the coupled simulation whereas the input files for the coupled programs only describe that portion of the system that they are to simulate. Finally, there will be several sections describing specific examples of the various types of coupling.

1.2 Basis of Coupling Methodology

The basis of the coupling methodology as implemented by the PVMEXEC program and by the PVM Application Programming Interface (API) is domain decomposition. The domains that can be separated into separate pieces are the models of the important physical processes that determine the behavior of the system being simulated. The behavior of the separate pieces of the system being simulated are computed by different computer programs or by different instances of the same computer code. The physical processes that can be modelled by different computer codes are the thermal-hydraulic behavior of the fluids in the system, the neutronic behavior of the reactor core, the thermal-mechanical behavior of the solid structures in the system, and the behavior of the control components in the system being simulated. This means that one computer program may compute the behavior of the fluids in all portions of the system while other computer codes compute the neutronic behavior of the reactor core or the behavior of control components in the system.

Additionally, the model of the thermal-hydraulic system can be subdivided into smaller pieces and these pieces can be simulated by different computer codes using different fluid models for their portion of the system, e.g. the primary coolant loop of a reactor may be divided into the reactor vessel with the reactor core and other internals and the primary piping, pumps, and primary side of the steam generators can be lumped into another piece and these two pieces of the primary system simulated by codes using different fluid models e.g., the COBRA-TF code for the reactor vessel and internals and the RELAP5-3D© code for the remainder of the primary coolant system. Or the primary and secondary systems may be modeled by one code, e.g. RELAP5-3D©, and the containment systems can be modelled by a different computer code, e.g., the CONTAIN code. The control system may also be subdivided into smaller pieces. The neutronic behavior of the reactor core must be modeled by a single code while the thermal-hydraulic model of the reactor core may be subdivided into several pieces and the several pieces can be simulated by different PVM tasks.

In the PVM coupling methodology described in this report, an instance of a computer program executing on a computational node in the virtual machine is called a task. Each task in the virtual machine simulates one of the coupled domains. The PVMEXEC program is also considered a task in the virtual machine. Each task in the virtual machine is assigned a unique identifier called the task id by the PVM library software.

1.3 Subdivision of a Thermal-Hydraulic System

Consider the thermal-hydraulic system that is represented by the schematic in **Figure 1**. This system has been divided into two domains with only two connections between the domains. The volumes in the left domain, volumes 1 and 2, are adjacent to volumes I and II in the right domain with junctions between the adjacent volumes. **Figure 2** shows the schematic of the coupled analogue of this system. The two domains have been separated and the junctions between the adjacent volumes in the uncoupled problem have been represented in the coupled simulation in both domains with coupling junctions. Boundary volumes have been added to the ends of the coupling junctions where the volume labeled 1 in the right computational domain is the analogue of volume 1 in the left computational domain. Note that volume 1 in the right computational domain is a boundary component while volume 1 in the left computational domain is in the interior of the left computational domain; this is also true for the volumes labeled 2. The dotted lines in **Figure 2** show the information flow between the coupled tasks.

For this type of coupling in which only volume data, i.e. scalar data, are exchanged between the coupled tasks, the orientation of the coupling junctions can be arbitrary and need not be consistent between the two domains because the velocities in the coupling junctions are computed independently for the two domains. **Figure 3** shows the schematic for another type of thermal-hydraulic coupling in which data for the coupling junctions are exchanged between the computational domains. The orientation of the coupling junctions must be consistent between the two domains so that if the domain that computes the velocities in the coupling junctions interprets a positive velocity in the coupling junction as flow into its domain as shown in **Figure 3**, then the domain that receives the velocities must interpret positive velocities as flow out of its domain.

1.4 Coupling Taxonomy

Several types of coupling have been implemented in the PVMEXEC program. These types of coupling can be categorized in three ways: first by the computational models that are being coupled, second by the frequency of data exchanges between the computational tasks, and third by the type of solution algorithm being used by the models being coupled together. The computational models that can be coupled are the thermal-hydraulics models, the neutron kinetics models, and the control systems models. Secondly, coupling can be either synchronous or asynchronous. Synchronous coupling is where each task uses the same time step size and data are exchanged every time step. Asynchronous coupling is where data are exchanged at fixed intervals. In asynchronous coupling, explicitly coupled tasks are free to use their own time step sizes subject to the restriction of exchanging data at the correct time. Finally, the coupling may be categorized by the type of solution algorithm used by the models being coupled together. The coupling for the thermal-hydraulic model may be either explicit or semi-implicit. In explicit coupling the

data received from another task remain constant during the time step advancements. In semi-implicit coupling, some of the data received from the coupled task are advanced in time while some of the data are held constant during the time advancement.

Not all types of coupling have been implemented in the PVMEXEC program. The types of coupling that have been implemented in the PVMEXEC program are synchronous and asynchronous explicit thermal-hydraulic coupling, semi-implicit thermal-hydraulic coupling (synchronous coupling by definition), synchronous kinetics coupling, and synchronous control systems coupling. The kinetics and control systems coupling, as implemented, are a form of explicit coupling because the data exchanged between the coupled codes remain constant while being used by the code that receive them.

Explicit thermal-hydraulic coupling can be further subdivided into parallel explicit coupling and sequential explicit coupling. A schematic of parallel explicit coupling is shown in **Figure 2** and a schematic of sequential explicit coupling is shown in **Figure 3**. In parallel explicit coupling, the coupled tasks are peers and the order of the messages between them is arbitrary. In sequential explicit coupling, the leader task, i.e., the task labelled as the right computational domain in **Figure 3**, must be advanced first and then the follower task, i.e., the task labelled as the left computational domain in **Figure 3**, can be advanced using data received from the leader task. These roles define an order for the computations and data exchanges. The difference between parallel explicit coupling and sequential explicit coupling is that sequential explicit coupling is strictly mass and energy conserving while parallel explicit may not conserve mass and energy depending upon which variables are exchanged between the codes and when they are exchanged. The mass and energy errors in parallel explicit coupling can be reduced by reducing the size of the explicit coupling data exchange intervals but the mass and energy errors can not be completely eliminated. It is recommended that sequential explicit coupling be used rather than parallel explicit coupling. The only disadvantage of sequential explicit coupling is that the wall clock time for the simulation will be greater than the wall clock time for the equivalent parallel explicit simulation.

There are roles and a defined order of computation and data exchanges for the other types of coupling. In semi-implicit coupling, the two roles are master and slave. The master task, the task labelled as the left task in **Figure 3**, computes part of its solution and sends the data from the partial advancement to the slave task, the task labelled as the right task in **Figure 3**. The slave task has been waiting to receive these data from the master task and can begin its time step advancement once the data are received. The slave task uses the data received from the master task to begin and finish its advancement. Once the slave task has completed its advancement, it sends its final values back to the master task. The master task then uses the values received from the slave task to finish its advancement. The advancement of the slave task is embedded in the middle of the master task.

The computational sequence for kinetics coupling is arbitrary where the thermal-hydraulic models can be advanced first using the power computed during the last coupled advancement and then the kinetics models can be advanced using the results of the thermal-hydraulic advancement or vice-versa, the kinetics solution may be advanced first, etc. In the kinetics coupling implemented in the PVMEXEC program, the thermal-hydraulic models are advanced first and then the kinetics models are advanced using the thermal-hydraulic conditions in the reactor core computed by the thermal-hydraulic advancement because

this is the computational order for uncoupled computations in RELAP5-3D©. The task performing the kinetics solution is designated as the server task and the tasks using the power data computed by the server task are called the client tasks. The names client and server are used because the server performs the work requested by the client, i.e., compute the reactor power.

Like kinetics coupling, the computational sequence for control systems coupling is arbitrary and the RELAP5-3D© computational order has been adopted by the PVMEXEC program; first the thermal-hydraulic models are advanced, then the kinetics models are advanced, and finally the control systems models are advanced. Within RELAP5-3D©, the order of the data exchanges for control systems coupling is determined by the user by the numbering of the control components. The control components are advanced in numerical order as specified by the user. Care must be taken in numbering the control components so that the computational order of control components in one task that are to send data is the same as the computational order of the control components in the other tasks that are to receive data and vice-versa.

RELAP5-3D© has been modified so that it can function in any role in all types of coupling, either as the master task or as the slave task in semi-implicit thermal-hydraulic coupling, as either the server task or client task in kinetics coupling, and as the leader task or the follower task in explicit sequential thermal-hydraulic coupling. The tasks in the other types of coupling are peers and there is no defined role for these types of coupling.

2 General Considerations

The most important decision in the design of a coupled simulation is the determination of which computer codes to use in the simulation. The codes should be chosen based on the type of transient being simulated as well as on the capabilities of the codes being considered. For example, in the simulation of a Large Break LOCA transient where reflood phenomena are important, a code like COBRA-TF might be chosen to simulate the behavior of the reactor core, the reactor vessel, and its internals and the RELAP5-3D© code might be chosen to simulate the behavior of the remainder of the primary system including piping, pumps, and primary side of the steam generators as well as the secondary side of the stream generators and feedwater system. In addition, a code like the CONTAIN code might be used to compute the response of the reactor containment to the addition of mass and energy to the containment due to the blowdown of the reactor primary system through the break.

If more than one code is chosen for the simulation of a hydraulic system, e.g., the primary coolant system, then the next choice is where to divide the system and which parts of the system are to be simulated by which code. This decision will be guided in part by the choice of the code to be used in the coupled simulation, the capabilities of the codes themselves, and by the type of transient being simulated. For example, the COBRA-TF code uses a three field model of fluid flow whereas the RELAP5-3D© code uses a two fluid representation of fluid flow. The parts of the system to be simulated by COBRA-TF should require the three field fluid model for accurate simulation of the important phenomena in the

transient being simulated and RELAP5-3D© should be used for that portion of the system only requiring a two field fluid model.

When RELAP5-3D© is being used in a coupled simulation, the input files being used must be complete models of that portion of the system each RELAP5-3D© task is to simulate. This allows the RELAP5-3D© tasks to be executed individually without being coupled to the other codes. This is to facilitate the initialization of a coupled computation where the individual RELAP5-3D© tasks can be initialized separately before performing a global initialization using the coupling methodology. The initialization of other simulation codes may require them to be initialized in coupled mode depending upon how the coupling has been implemented in these codes.

The next important decision to be made is the type of coupling to use between the several codes. If the parts of the system being simulated by the different codes are tightly coupled, i.e., have similar response times, then synchronous coupling should be used. If the parts of the system being simulated by the different codes are not tightly coupled, then asynchronous coupling can be used. Based on these considerations, semi-implicit coupling (a type of synchronous coupling) would be recommended for coupling COBRA-TF and RELAP5-3D© for the simulation of the reactor core, reactor vessel and primary coolant system in order to preserve the numerical stability of the resulting coupled calculation and explicit, asynchronous coupling would be recommended for the coupling of RELAP5-3D© to the CONTAIN code for the simulation of the containment response. Because the response of the containment depends upon the mass and energy input to the containment through the break, the sequential subtype of explicit asynchronous coupling would be recommended for coupling RELAP5-3D© to the CONTAIN code because it conserves mass and energy between the two codes.

3 PVMEXEC Program

The PVMEXEC program is used to initiate, control, and terminate the execution of a coupled computation on a virtual machine. The input file for the PVMEXEC program contains all of the information about the coupled computation whereas the input files of the coupled codes only contain the information needed to simulate their respective portions of the coupled computation. There are five sections in the input file for the PVMEXEC program. These sections are delimited by the keywords ‘virtual’, ‘simulation’, ‘processes’, ‘messages’, and ‘timesteps’. Comments may be included in the input file and are marked by a sharp, i.e., ‘#’, at the beginning of the line. Lines (or cards for older users) may contain up to 256 characters. **Figures 5**, **6**, **7**, and **8** contain examples of input files for the several types of coupling. These files will be discussed in detail in their appropriate sections.

Each section of the input file begins with the reserved keyword by itself on a line in the input file. The lines that follow a keyword are considered part of that section until another keyword is encountered in the input file. The data in the input lines are interpreted as blank delimited words. Some of the data items entered by the user in one section of the input deck become user defined keywords in subsequent sections of the input file. All reserved keywords in the PVMEXEC input file must be in lower case. All other

character data in the PVMEXEC input file can be in either case as appropriate. For example, the command line parameters for RELAP5-3D© must be in lower case but the name of the RELAP5-3D© executable file can be in either case.

3.1 Virtual Section

The 'virtual' section of the input file is optional and, if present, describes the computers that are to be used in executing the coupled simulation. If this section is absent, the virtual machine consists of the computer executing the PVMEXEC program. There can be three types of input lines in the 'virtual' section of the input file. The first type of input line is required if this section is included in the input file. This type of line begins with the name of a computer that is to be used in the coupled simulation. More than one line of this type can be included in the input file. The names of the several computers become user defined keywords in the 'processes' section of the input file. The other two types on input lines begin with the keywords 'wait' and 'write' respectively. The lines with the keywords 'wait' and 'write' are optional. Each type of input line will be described in the following subsections.

3.1.1 Keyword 'machine'

The 'machine' keyword is a user define keyword and multiple 'machine' keywords may be defined in the 'virtual' section of the input deck. The values of the 'machine' keywords are the names of the computers that are to be used in the coupled simulation. Each computer is described on a single line with the network name of the computer appearing first followed by keyword parameters containing options for the virtual machine.

Commonly used options are wd and ep where each option is followed by a user define directory. The wd option specifies the working directory that contains the input files for the simulation codes and is the default location for any output files from the simulation code. The ep option specifies the execution path where the executable file for the simulation code is located. Other parameters may be found in the PVM documentation. If the wd and ep options are omitted, the default working directory and default execution path are the directory from which the PVMEXEC program is executed. For options that specify directories, each option may specify a different directory. Figure 5 shows the template file for one of the installation test cases. The character string 'MACHINE' in Figure 5 has been used as a placeholder for the actual machine name in this template. The character string 'WHERE' is a placeholder for the user defined location of a directory specified by the wd and ep options. The placeholders are modified by the RELAP5-3D© installation scripts to insert the name of the computer used for the installation of RELAP5-3D© and the directory from which the installation script executes the coupled installation test cases.

3.1.2 Keyword 'wait'

There are two optional parameters that may be included in the 'virtual' section of the PVMEXEC input deck. The first option uses the keyword 'wait' and is followed by a real number defining the global

wait time. The global wait time is the number of seconds that any task must wait to receive a message from another task, including the PVMEXEC task.

All data communication between tasks uses a handshake protocol in which a task sends a message to another task and then listens to receive an acknowledgment from the task to which it sent the message verifying that the other task has received the message. Alternately, a task listens to receive a message from another task and then sends an acknowledgment to the task that sent the message verifying to the sender that the message had been received. If a message has not been received within the wait time when waiting to receive a message or an acknowledgment has not been received during the wait time after sending a message, the simulation is terminated after writing a timeout error message. The timeout avoids deadlock situations where either all codes have sent a message and are waiting to receive an acknowledgment or where all codes are listening to receive a message that never arrives. The default global wait time is -1.0 seconds and is used by all tasks if not specifically overwritten later in the input file where a wait time of -1.0 means that all codes will wait indefinitely.

3.1.3 Keyword 'write'

The other optional parameter uses the keyword 'write' and is followed by a filename. When a task is executing in the virtual machine, any output that would normally be written to the computer screen (called stdout in UNIX/LINUX) is collected in a file named pvml.<user number> located on the /tmp directory where <user number> is the id number of the person executing the PVMEXEC program. The filename and location are for UNIX/LINUX type operating systems. Consult the PVM documentation for the name and location of this file on WINDOWS operating systems. The user may specify another directory for the pvml file instead of the /tmp directory by specifying a directory using the PVM_TMP environmental variable. Alternately, the user may specify either a relative path name or full path name for this output file using the 'write' keyword. This file, however specified, will be used for the stdout from all coupled codes unless different files are specified for each code in the 'processes' section of the input file. See **Figure 5** for an example of specifying the global stdout file.

3.2 Processes Section

The next section of the input file for the PVMEXEC program is the 'processes' section. This section of the input file specifies the several codes that are to be used in the coupled simulation. This section is divided into subsections delimited by the network names of the computers specified in the 'virtual' section.

3.2.1 Keyword 'machine'

Each subsection begins with a user defined 'machine' keyword that was defined in the 'virtual' section of the input file. Each subsection contains lines specifying the codes to be executed on that computer. Within each subsection, each code is described on a single line where the code described on each line becomes a task in the virtual machine. The line begins with a descriptive name for the task, followed by the type of time step control for the task (either synchronous or asynchronous), followed by the name of the executable file for the particular simulation code, finally followed by any command line

parameters needed by that particular simulation code. There should be a subsection for each of the computers listed in the 'virtual' section of the input file. The descriptive name for each executing code becomes a user defined keyword in the 'messages' section of the input file.

3.2.2 Keyword 'writes'

The output that would normally be written to the global stdout file specified in the virtual section of the input file may be directed to individual files by including lines in each subsection of the tasks section containing the keyword 'writes'. These lines are optional and begin with the descriptive name of a task followed by the keyword 'writes' followed either the relative pathname or the absolute pathname of the file of the file that is to contain the output from the code named by the first word on the line. Files described by a relative pathname will be written to the path beginning at working directory.

3.2.3 Keyword 'uses'

Finally, another optional line includes the keyword 'uses'. This line begins with the descriptive name of a task followed by the keyword 'uses' followed by an integer followed by the reserved keyword 'threads'. This line is used to specify the number of threads that the task is to use when and if the task has been programmed to use multiple threads of execution in its computations. If this line is absent for a given task, the default value of zero is sent to the task. A value of zero indicates that the task should decide for itself how many threads to use for its computations. RELAP5-3D© has been programmed to use multiple threads of execution as indicated by the inclusion of OpenMP directives in the code source with the maximum number of threads set to minimum of the number of cpus in the computer on which the task is executing and a value of 4.

3.3 Simulation Section

The next section of the input file is the 'simulation' section of the input file. This section begins with the keyword 'simulation' on a single line. This section of the input file is optional as there are default values for the parameters specified in this section. Each parameter is specified on a single line and each line begins with a keyword.

3.3.1 Keyword 'name'

The first keyword in this section of the input deck is 'name' and is followed by a character string of up to 80 characters in length. This string is written to the restart files of the several simulation codes for initial simulation runs and is compared to the string written on the restart files for restart runs. If the 'name' string in a restart file is not the same as the 'name' string in the PVMEXEC input deck for a restart run, a warning message is written to the output file of the simulation code and the restart run continues as if the names matched. If this string is not included in the input file for the PVMEXEC program, a string of 80 blank characters is used as the default simulation name.

3.3.2 Keywords ‘restart time’

The second keyword is ‘restart time’ and can be used to specify the simulation time at which to begin a restart run. This parameter is optional and if absent, a default value of zero is sent to coupled codes. This indicates that an initial run is intended. A non-zero value indicates a restart run that is to start from the time specified. A value of -1.0 for the restart time designates that the restart is to occur from the last restart record on the restart file. As implemented in RELAP5-3D©, the mode indicated by the value of the restart time, either an initial or a restart run, overrides the mode set in the RELAP5-3D© input deck. A warning message is written to the RELAP5-3D© output file if the modes do not match and code execution continues. A mismatch in the modes between the mode specified in the PVMEXEC input file and the input files of the coupled codes may cause subsequent errors and code failure.

3.3.3 Keywords ‘start time’

The third keyword is ‘start time’. This optional parameter can be used to set the start time of an initial simulation or to reset the simulation time in a restart run. The default start time for an original run is zero seconds, and the default start time for a restart run is the restart time. In RELAP5-3D©, the start time is reset to zero when performing a restart run and switching from steady state mode in the restart file to transient mode for the restart. The start time option can be used to ensure that all of the coupled codes use the same start time. If this parameter is omitted from the input deck, the default start time is used.

3.4 Messages Section

The next section of the input file is the ‘messages’ of the input file. This section of the input file specifies the data that are to be exchanged between the codes executing on the ‘virtual’ machine. This section of the input file is subdivided into subsections beginning with the keywords ‘explicit’ for explicit coupling, ‘semi-implicit’ for semi-implicit coupling, ‘kinetics’ for kinetics coupling, and ‘control system’ for coupling of control system models. The input lines in each subsection specify the data that are to be exchanged between pairs of tasks. The names of the tasks are the user defined keywords that were specified in the ‘processes’ section of the input file. Each line begins with the name of a task as defined in the ‘processes’ section of the input file, followed by the keyword ‘sends’, ‘receives’, ‘awaits’, or ‘preceeds’ followed by the name of another task. Lines containing the keywords ‘sends’ or ‘receives’ specify the data to be exchanged in a message between the named tasks and each message is given a unique identifier by the PVMEXEC program called a message tag.

3.4.1 Keywords ‘sends’ and ‘receives’

The lines that use the keyword ‘sends’ or ‘receives’ are terminated with a string (a series of blank delimited words) that defines the data that are to be sent or received. For each line that specifies data to be sent from one task to another there must be a corresponding line that describes how the data that are received by the second task are to be interpreted by the task receiving the data. The order of the names of the two tasks in the receive specification is the reverse of the same two task names as defined in the send data exchange specification. The first send data exchange specification is paired with the first receive data

specification with the same pair of task names as the send specification. Each pair of data specifications define a single message that is to be exchanged between the tasks, a data exchange being defined as a pair of messages: the message containing the data followed by the acknowledgment. The string defining the data to be sent or received is sent by the PVMEXEC program to the sending or receiving code and the data in the string must be understood by the code receiving the data specification string from the PVMEXEC program.

This document describes the format for the data specification string that has been implemented by the RELAP5-3D© code. The data specification string for RELAP5-3D© consists of pairs of words, each pair consisting of a character string containing the name of a RELAP5-3D© variable followed by a fully qualified volume, junction, or component number, or a character string containing a component name as found in the input deck for that particular RELAP5-3D© task followed by a volume or junction number within the component named. When a RELAP5-3D© component name is used in the data specification, RELAP5-3D© replaces the component name with a internally defined list of variable names, where the variable names used depend upon whether a volume component or junction component was named. Each code has its own way of specifying the data items in a particular message. The total number of individual data items specified in a ‘sends’ data specification, either data items named specifically using variable names or data items named implicitly using a component name, must be the same as the total number of items named in the corresponding ‘receives’ data specification.

3.4.2 Keyword ‘awaits’

In addition to the data specification lines in the messages section of the input file, additional lines containing the keyword ‘awaits’ may be included. This line contains a pair of task names separated by the keyword ‘awaits’ and the second task name is followed by a real number that defines the wait time for messages that are to be sent from the second task to the first task for either a data message or an acknowledgment. Two lines containing the same pair of task names but with the names reversed in the second line may be entered but with different wait times. These lines define the wait times for individual messages and allow the wait time for a data message to be different from the wait time for its acknowledgment.

3.4.3 Keyword ‘preceeds’

Finally, one additional line may be included in the message specification section for explicit coupling. This line contains the keyword ‘preceeds’ separating a pair of task names. This line specifies that the pair of tasks named are using sequential explicit coupling and the first task named is the leader in the sequential explicit coupling and that the second task named is the follower in the sequential explicit coupling. If this line is not entered for a pair of tasks, parallel explicit coupling is assumed.

3.5 Timesteps Section

The last section of the input file is the 'timesteps' section. This section of the input file specifies the time steps that are to be used for synchronous coupling or the data exchange intervals for asynchronous coupling. There can be any number of time step cards and each input card defined an interval of time during the simulation. The cards use the same data as the RELAP5-3D© time step cards for specifying the intervals. Each card begins with the end time of the interval, followed by the minimum and maximum time step sizes allowed during the interval. These items are followed by a packed word specifying whether extra printed output should by produced by synchronously coupled codes, finally followed by four integers that specify the frequency of minor edits and writes to the plot file, the frequency of major edits, the frequency of restart writes, and the frequency of explicit data exchanges. The packed work is equivalent to the 'dtt' bits of the control work on the time step cards for RELAP5-3D© (See Section 3 of Appendix A of Volume II of the RELAP5-3D© manual).

The output frequencies are converted to time intervals by multiplying them by the maximum time step size. The output times for minor edits, major edits, and restart writes determined by these lines supersede the output times determined from the information contained in the input decks of the coupled codes for synchronous coupling. Also, the maximum and minimum time step sizes as well as the packed word defining extra output on these cards supersede the internally defined values for synchronously coupled codes. Only the restart write times supersede the internally defined output times for asynchronously coupled codes (the explicit exchange intervals are not determined locally). The end of interval time on the last line in this section defines the end time of the simulation. The input lines should be entered with increasing end time on each card.

The output intervals are converted into time targets that define points in time that the codes should reach by the adjustment of their time step sizes. The PVMEXEC program performs the time step adjustments for synchronously coupled codes and the time step is adjusted locally for asynchronously coupled codes. It is recommended that the end of interval time on each time step card be an even multiple of the maximum time step size in each time interval and that the end of interval times and the maximum and minimum time step sizes in each interval be the same for the PVMEXEC program and all of the coupled codes. This is recommended because the time step selection logic in the PVMEXEC program (for synchronously coupled codes) and in RELAP5-3D© (for asynchronously coupled codes) will reduce the time step size if the time targets are too close together where RELAP5-3D© does not tolerate large time step reductions very well.

4 Examples of Coupled Simulations

This section of the report discusses examples of the several types of code coupling using the installation test cases that are included as part of the distribution of the RELAP5-3D© code. Each test case demonstrates some aspect of the coupling methodology and consists of two instances of RELAP5-3D© coupled together. There is an uncoupled analogue for some of the coupled test cases so that the results of the coupled and uncoupled test cases can be compared to verify that the coupled test case reproduces the

results of the uncoupled test case. Each coupled test case utilizes three input decks, one input deck for the PVMEXEC program and an input deck for each of the two instances of RELAP5-3D©.

The input deck for the PVMEXEC program is built using a template file that is modified to include the name of the computer on which the test case is being executed and to include the working directory and execution path from which the PVMEXEC program is being executed. The string 'MACHINE' in the template file is replaced by the name of the computer where the test case is being executed and the string 'WHERE' is replaced by the name of the directory containing the input file (See **Figure 5** for an example of a template file). The output files will be written to the working directory. It is assumed that the RELAP5-3D© executable is located in the same directory. This is not required by the PVM methodology and the working directory and the execution path may be different at the user's discretion. In these examples all input file names begin with the string 'pvm' followed by a three to five character string describing the test case followed by a single letter, 'x' for the input files for the PVMEXEC program, and other single letters for the RELAP5-3D© input decks that describe their roles in the coupled test case. The input files have the file extension 'i' designating an input file and the template file has the extension 'ii'.

4.1 Explicit Coupling

Explicit coupling is characterized by the fact that the data that are received by a coupled code are held constant during the time step advancements of that code until new data are received. Explicit coupling can be either synchronous where data are exchanged each and every time step or it can be asynchronous where data are exchanged at fixed intervals. Synchronous coupling means the analysis programs use the time step sizes calculated by PVMEXEC whereas asynchronously coupled codes may choose their own time step size independently so that each one of the asynchronously coupled code may use a different set of time steps to arrive at the same point in time, i.e., the time target, to perform the next data exchange.

Two forms of explicit coupling have been implemented using the PVM coupling methodology, i.e., parallel explicit coupling and sequential explicit coupling. In parallel explicit coupling, the coupled tasks are peers and can be advanced in time in any order. In sequential explicit coupling, one task, the leader task, must be advanced first over the coupling interval to compute the fluid flow rates in the coupling junctions between the two domains. Once the leader task has computed the flow rates in the coupling junctions, it sends the flow rates to the follower task which then uses the flow rates as its boundary condition and advances through the coupling interval. Sequential explicit coupling is guaranteed to conserve mass and energy between the two coupled tasks because the flow rates in one task are the same as the flow rates in the other task during the same coupling interval. Mass and energy are not conserved in the simplest implementation of parallel explicit coupling because the flow rates computed in the coupling junctions in the separate input decks of the two coupled tasks that represent the connection between the coupled domains are computed independently by the two tasks. The results of these independent computations will be different even if the geometry of the junctions are the same in the two tasks and the same code is used to simulate each portion of the coupled system. This is a consequence of the fact that in one task the upstream pressure for the coupling junction will change during the time step advancements because the upstream volume is in the interior of the computational domain for that task while the

downstream pressure, being the value received from the other task, will remain constant during the advancements. In the other task it is the upstream pressure that remains constant over the advancements while the downstream pressure changes. This difference in the time levels for the pressures used in the computation of the flow rates in the coupling junction ensures that the flow rates computed by the two tasks will be different.

4.1.1 Parallel Explicit Coupling

There are several installation test cases that use parallel explicit coupling. All of these test cases use asynchronous coupling. The pvmeda series of test cases are based on the edhtrk (Edward's pipe blowdown) uncoupled test case where the 20 volume pipe in the uncoupled test case was divided into two 10 volume pipes for the coupled test cases. **Figure 4** shows a diagram of both the uncoupled test case and its coupled counterpart. The dashed arrows show the data exchanges between the two codes. The schematic shows that the junction between the two halves of the test section in the uncoupled test case, i.e. the junction between volumes 10 and 11 in the uncoupled test case, is represented by two junctions in the coupled test case, junction 4 in the 'child' input deck and junction 104 in the 'parent' input deck. The junctions must be oriented in the same direction because each task must interpret a positive velocity in the junction in the same way, i.e., as out of the 'child' domain and into the 'parent' domain. If the velocities in the junction are not being exchanged between the two tasks, the junctions can be oriented independently. This test case also illustrates that a component, either a volume or a junction, whose conditions are sent to another task is an 'active' component whose fluid conditions are computed by the solution of the conservation equations. In contrast, the components that receive conditions from another coupled task are 'passive' or boundary components, whose conditions are specified by the user for uncoupled problems.

The test cases include two initial runs and two restart runs. There are three input decks for each test case: the input deck for the PVMEXEC program and the two RELAP5-3D© input decks. The input decks for the PVMEXEC program are built using template files, **Figures 5** through **8** (see page 31 through page 34). The two initial runs demonstrate the use of the default start time and the specified start time options in **Figure 5** and **Figure 6** respectively. The two restart runs demonstrate a restart from a specified restart time during the initial run and a restart from the last restart record on the restart file generated by the initial run, **Figure 7** and **Figure 8** respectively. **Figures 7** and **8** for the restart runs show that the entire PVMEXEC input file must be entered for a restart run. This is in contrast to RELAP5-3D© where only a minimal input file is needed for a restart run because most of the required data are read from the restart file. The PVMEXEC program does not produce a restart file so the user must re-enter all of the data needed for the restart run.

The template files are modified during the installation task to include the name of the computer being used to execute the coupled test case and to include the location of the working directory and execution path for the test cases. The template file assumes that the working directory and the execution path are the same. **Figure 5** shows the template file for the pvmedax test case. This is an initial run and is the basis for the two restart runs. The template file for the other initial run, pvmeda1x, is shown in **Figure 6**. The

template files are identical except for the start time option. Test case pvmedax uses a default start time of zero seconds, and the pvmeda1x test case uses a specified start time of 0.0001 seconds.

Figure 5 shows that the descriptive names of the two coupled instances of RELAP5-3D©, lines 9 and 11 in the 'processes' section of the input files are user defined keywords in the 'messages' section of the input file that describe the data exchanged between the two codes. The 'messages' section of the input file shows that there can be different numbers of messages sent from one coupled code to another coupled code and that the messages may contain different numbers of data items. The task named 'parent' sends four messages to the task named 'child' whereas the task named 'child' only sends two messages to the task named 'parent'. The send and receive message lines have been listed together so that the number of data items can be compared and so that the user might more easily compare the specifications for the individual data items. Line 15 in **Figure 5** shows that the first data item in the first message that the 'parent' task sends is to be the pressure in volume 1 of component 103 and line 16 shows that the 'child' task is to interpret the first data item in the first message received as the pressure in volume 1 of component 5. The two data items use the same format for specifying the data item because the two coupled codes are both instances of RELAP5-3D©. If one of the coupled codes had not been RELAP5-3D©, the character string specifying pressure might be the string 'pres' instead of 'p' and the location specifier might be the number 10301 or the string 1,103 instead of the number 103010000. The point is that the data specifiers are simulation code specific and have meaning only to that particular code.

The absence of the keyword 'preceeds' in the tasks section of this file designates the coupling is parallel explicit coupling rather than sequential explicit coupling. It is recommended that the specification for a receive message should follow immediately after the specification for the corresponding send message so the number of data items specified in each specification can be compared and checked that the data items being sent are correct and that they are being interpreted correctly in the receive message.

The input file shown in **Figure 5** shows the use of the 'write' and 'writes' keywords to redirect the standard output from the PVMEXEC code and the two instances of RELAP5-3D© from the default output file to individual files.

Figure 9 and **Figure 10** show a portion of the RELAP5-3D© output files for the 'parent' and 'child' tasks. These figures show the description of the data items in each message sent or received by each code along with the message tag that is assigned to each message by the PVMEXEC program. This printout provides another opportunity for the user to verify that the messages contain the information intended.

4.1.2 Sequential Explicit Coupling

There are two test cases that illustrate the use of sequential explicit coupling; pvmedsx and pvmeds10x. These two test cases are similar to the pvmeda test cases and are identical except for the explicit coupling exchange frequency. Test case pvmedsx exchanges data with a frequency of one and pvmeds10x exchanges data with a frequency of ten. The data exchange frequency should be chosen so the flow rates do not change too much over the coupling interval where 'too much' depends upon the transient

being simulated and the tightness of the coupling between the two domains. The geometry and components are the same as the pvmeda test cases. **Figure 11** shows a diagram of the test cases where the arrows show the data exchanges. It is unfortunate that the leader task, i.e., the task that 'preceeds' the other task, is named 'leader' and the follower task is named 'follower' because it conflates the name of the tasks with their roles in the coupling. The leader task sends junction data to the follower task and the follower task sends volume data to the leader task. This is in contrast to the pvmedax test case in which both coupled codes send volume data to the other code.

Figure 11 illustrates an important difference between sequential and parallel explicit coupling. In sequential explicit coupling, the coupling junction in the two coupled tasks, junction 104 in the leader task and junction 4 in the follower task, must observe the same junction orientation. If the coupling junction is oriented so that positive flow in the junction is OUT of the computational domain in one coupled task, then the coupling junction in the other task MUST be oriented so that positive flow in the junction is INTO its computational domain. Alternately, if the coupling junction is oriented so that positive flow in the junction is INTO the computational domain in one task, then the coupling junction is the other task MUST be oriented so that positive flow in the coupling junction is OUT of its computation domain. The PVM coupling system does not impose any convention in the orientation of the coupling junctions in sequential explicit coupling except that the junction orientation be consistent. It is the responsibility of the user to ensure that the orientations are consistent in the input decks of the two coupled tasks. In contrast, the implementation of semi-implicit coupling imposes a sign convention on the orientations of the coupling junctions that will be explained in Section 4.2.

Figure 12 lists the input deck for the pvmedsx test case. The input deck is very similar to the input deck for the pvmedax test case except for the 'messages' section. First, the 'messages' section contains the keyword 'preceeds' to designate that this test case uses sequential explicit coupling instead of the default parallel explicit coupling. Secondly, the data specifiers in the send and receive messages use component names and volume or junction numbers within the component instead of specifying individual data items. Component names and volume or junction numbers within the component MUST be used for sequential coupling but their use is optional in parallel explicit coupling where individual variable names and locations can be used. The component names are shown in parentheses below the component type and number in **Figure 11**. Component 5 in the follower task is shown using a dashed line to indicate that it must be present in the RELAP5-3D© input deck to form a complete system for RELAP5-3D© but it is not used in the solution of the conservation equations for the follower task. RELAP5-3D© expands a component name into a internally defined list of variables for that component where the list is different for volume components and junction components. **Figure 13** and **Figure 14** show a portion of the RELAP5-3D© output files for this test case. The figures show the result of the expansion of the component name and number into a list of variables.

4.1.3 Heat Structure Coupling

The coupling that has been discussed in the previous sections involve dividing a hydraulic system, that is, a self-contained network of volumes and junctions, into two or more pieces and simulating the

separate pieces in different tasks. Heat structure coupling involves coupling separate hydraulic systems using the heat flux through the solid structures whose surfaces contact fluids in different fluid systems. For example, the primary side of a steam generator is connected to the secondary side of the steam generator by the heat flux through the tubes in the steam generator. The primary coolant loops of a reactor system are coupled to the containment by the heat fluxes through the reactor vessel walls and the walls of the coolant piping. This type of coupling can be accomplished by modeling the heat structure that connects the two systems in the system model in the input decks of both of the coupled codes. These heat structures touch the fluid in their respective computational systems on only one side of the heat structure. The surface heat flux and the surface temperature on the surface of the heat structure that touches the fluid are computed by the internally coupled heat conduction and thermal-hydraulic model if a boundary condition can be supplied to the other side of the heat conductor by the other PVM coupled code. One code uses a surface heat flux as its boundary condition and the other code uses the surface temperature as its boundary condition. Either parallel explicit coupling or sequential explicit coupling can be user to exchange the heat flux data and temperature data between the coupled codes. However, if sequential explicit coupling is used, it is recommended that the leader task compute and send the surface heat flux to the follower task and that the follower task send the surface temperature to the leader task so that energy would be conserved between the two tasks.

Figure 15 shows a diagram of heat structure coupling through a tube wall in an uncoupled simulation and in the equivalent coupled simulation. The hashed area represents the heat structure. In the uncoupled simulation, fluid touches the heat structure on both surfaces and convective boundary conditions are used on both sides of the heat structure. In the coupled simulation the fluid in the primary task only touches the fluid on one side of the heat structure, the inside of the tube for a steam generator tube, and the fluid in the secondary task only touches the fluid on the opposite side of the heat structure, the outside of a steam generator tube. A convective boundary condition can be used for the surfaces that touch the fluid and the boundary condition must be specified, i.e., specified by the user or by another task, on the other side of the heat structure. In this case, the boundary condition must be specified on the outside of the tube in the primary task and on the inside of the tube in the secondary task.

The choice of which boundary condition to use for each task, either a surface heat flux or a surface temperature, is up to the user, and both boundary conditions can be the surface temperature, or both boundary conditions can be the surface heat flux, or a combination of surface temperature or surface heat flux can be used. It is recommended that one task use a surface heat flux and the other task use a surface temperature. This ensures that the energy out of one fluid system into the heat conductor is the same as the heat flux into the heat conductor in the other system, thus conserving energy. In RELAP5-3D© the surface heat flux and surface temperature can be accessed directly for sending to a coupled task but RELAP5-3D© cannot use the values received from another task as boundary conditions for its heat structures. The values received from the other task must be stored in a general table since only general tables can be used to specify a non-convective boundary condition for a heat structure in RELAP5-3D©.

4.2 Semi-Implicit Coupling

The other type of thermal-hydraulic coupling is semi-implicit coupling. Semi-implicit coupling is a type of synchronous coupling. All of the tasks participating in semi-implicit coupling must be defined as synchronous tasks in the 'processes' section of the input file of the PVMEXEC program. Semi-implicit coupling is characterized by the fact that changes in the conditions in one of the coupled domains during its time step advancement are felt in the other coupled domain during the same time step. This tight coupling of the conditions in the two domains eliminates the sonic Courant stability limit that is present in explicit thermal-hydraulic coupling.

The data to be exchanged between the two domains are specified in the section of the input file for the PVMEXEC program that begins with the keyword 'semi-implicit'. These data are defined by specifying the component name and the volume or junction number within that component for the coupling of RELAP5-3D© to another code. The method of specifying the data that the other code are to send to RELAP5-3D© or receive from RELAP5-3D© is code specific and may be specified in another manner. The input processor in RELAP5-3D© expands the component name and number into a pre-defined list of data items. The list of items for volumes is different from the list of items for junctions. One task sends volume data to the other task and the other task sends junction data back to the first task. The task sending volume data is designated the master task and the task sending junction data is designated the slave task. The slave task is responsible for computing the flow rates in the coupling junction using the conditions in the coupling volume that are received from the master task.

In RELAP5-3D© the simulation model as defined in the input deck is divided into self-contained fluid systems such as the primary coolant system and a number of secondary coolant systems. Any one of the fluid systems in a RELAP5-3D© simulation may only be connected to a single other task and coupling of a fluid system in RELAP5-3D© to multiple tasks is not allowed, i.e., there can only be one 'master' task and one 'slave' task for a fluid system. However, one fluid system in RELAP5-3D© may act as the master task in coupling to another task and a different fluid system in the same RELAP5-3D© model may function as the 'slave' task in coupling to a different task. **Figure 17** shows a schematic of a semi-implicitly coupled test case. The lower and upper core components in the master task are placed in the same fluid system by RELAP5-3D© because they are connected through the bypass component. If the bypass component was removed, RELAP5-3D© would normally put the lower core and upper core components into different fluid systems. However, because both of these components are coupled to the same task, i.e., the slave task, they are placed into the same fluid system by RELAP5-3D©.

Figure 16 shows a schematic for the uncoupled version of the 'pvmcore' installation test case and **Figure 17** shows the schematic of the coupled version of the same test case. This test case represents a heated reactor core channel and an unheated bypass channel connected between upper and lower plenum volumes. The dashed lines in **Figure 17** illustrate the data exchanges between the two tasks. **Figure 18** lists the template file for the input deck to the PVMEXEC program for this test case.

The coupling boundary components in the master task (the time dependent volume and attached single junction in **Figure 17**) are passive components because the conditions in these components are computed by the slave task and are sent to the master task. The coupling boundary components can be either time dependent junctions and time dependent volumes whose conditions are normally supplied by the user in tables or they can be single volumes and single junctions. Single volumes and single junctions are normally active components, i.e. their conditions are computed as part of the solution algorithm, but they are converted into passive components in coupled simulations if their conditions are received from another task. Any combination of these coupling boundary components can be used in the master task.

The coupling boundary components in the 'pvmcorep' input deck, the input deck for the master task in the 'pvmcore' test case, are time dependent volumes and single junctions as shown in **Figure 17**. The coupling boundary components in the pvmnds.i input deck (the input deck for the master task in the 'pvmnd' coupled test case that is a test case for combined semi-implicit thermal-hydraulic coupling and nodal kinetics coupling) are also a combination of time dependent volumes and single junctions (See **Figure 21**). The coupling boundary components in the 'pvmnonc' coupled test case (not discussed in this report) are time dependent volumes and time dependent junctions in the master task. These test cases illustrate the different combinations of volume and junction components that may be used as coupling boundary components when RELAP5-3D© is used for the master task of semi-implicit coupling. It is recommended that the coupling boundary components in the master task be time dependent volumes and time dependent junctions to emphasize that these components are passive components.

The coupling boundary components in the slave task must be active components, i.e., they must be single volumes and single junctions whose conditions are computed as part of the time step advancement when RELAP5-3D© is used for the slave task. The conditions in the coupling boundary components in the slave task are sent to the master task after they are computed during the time step advancement in the slave task. If a task is functioning as the master task in the coupling of a computational system, it can only send volume data to its corresponding slave task and if a task is functioning as the slave task, it must only send junction data. A mixture of volume data and junction data in the messages that the master task sends to or receives from its slave task is not allowed and vice-versa. The three test cases illustrate all of the combinations for the coupling boundary components for the master task in semi-implicit coupling.

The only requirement that is imposed on the input decks of the coupled tasks is that the coupling junctions in the master task be oriented such that a positive flow rate in the junctions indicates flow INTO the domain represented by the master task and conversely, that the coupling junctions in the slave task be oriented such that positive flow in the coupling junction represents flow OUT of the domain represented by the slave task. This is shown in **Figure 17** where the arrows representing the coupling junctions show the proper orientation of the coupling junctions. This requirement is different from the requirement for junction orientation in sequential explicit coupling where it is only required that the orientation of the junctions be consistent between the coupled tasks.

Finally, the input decks for RELAP5-3D© tasks in semi-implicit coupling must be valid input decks, capable of being executed successfully as uncoupled tasks. The coupling boundary volumes in the master

task shown in **Figure 17** are shown in dashed lines to indicate that their conditions are never used in coupled problems but that they must be included in the RELAP5-3D© input deck to satisfy the RELAP5-3D© input processor. If these coupling boundary volumes are not present in the RELAP5-3D© input deck, the code will terminate at the end of input processing with an input error.

4.3 Kinetics Coupling

Kinetics coupling is a specialized type of explicit coupling in which one of the coupled codes computes reactor power using either a point kinetics or nodal kinetics model and the other coupled codes use the computed reactor power in their computations. The code performing the kinetics computation is designated as the 'server' task and the other tasks are designated as the 'client' tasks. Kinetics coupling may be either synchronous or asynchronous but only synchronous kinetics coupling has been implemented by the PVMEXEC program at this time. The kinetics code needs thermal-hydraulic fluid conditions in the volumes and heat structures that represent the reactor core to perform its computations. The kinetics coupling as implemented in the PVMEXEC program expects the client tasks to perform their thermal-hydraulic computations at the beginning of a time step using the reactor power data received from the server task at the end of the previous time step. After the client codes advance their thermal hydraulic models, they send the required thermal-hydraulic conditions to the server task and listen to receive the computed reactor power data from the server task. Before beginning the kinetics computations of a time step advancement the server task listens to receive the thermal-hydraulic conditions from the client tasks, then advances the reactor power using the thermal-hydraulic conditions received from the client tasks. The thermal-hydraulic conditions received from the client tasks are used by the server task to compute the reactivity for point kinetics or the neutron cross sections for nodal kinetics. Once the server task has completed its time step advancement it sends the newly updated reactor power to the client tasks.

The data that are to be sent from the client tasks to the server task consist of predetermined sets of fluid conditions in the specified volumes in the thermal-hydraulic model of the client task or a single value, presently defined as the volume averaged temperature in a heat structure, in the specified heat structures in the client system model. The volumes are designated using the component name and volume number and the volume averaged temperature is designated by the use of the keyword 'heatstr' and the fully qualified heat structure number, where fully qualified mean using the heat structure component number and heat structure number within the heat structure component as described in Section 4.8 of the RELAP5-3D© input description (Appendix A of Volume II of the RELAP5-3D© manuals).

The power data that the server task send to the client tasks consist of a set of five values for point kinetics or sets of five power values for nodal kinetics. The power data consist of the total power, the fission power, the total gamma power, the gamma power from the decay of fission products, and the gamma power from the decay of actinides. The actinides are Neptunium 238 and Plutonium 239 produced by neutron absorption in Uranium 238. The power for point kinetics is specified by the use of the keyword 'power' with the parameter 0 (zero) and the sets of power data are specified by the use of the keyword 'zone' for nodal kinetics power data with the parameter being the zone identification number. The zones are defined in the input data for the kinetics model of the server task.

A ‘zone’ is a mapping between the volumes and heat structures in a thermal-hydraulic model and the computational nodes in the kinetics model. A zone contains one of more volumes and heat structures from the thermal-hydraulic model and one or more nodes from the kinetics model. The point kinetics model can be considered a kinetics model having only one zone that encompasses the entire reactor core. The conditions in the volumes of a zone are used to compute a weighted average set of fluid properties for the zone and the conditions in the heat structures in a zone are used to compute a weighted average structure temperature for the zone. The fission power in the zone is the summation of the fission powers in the kinetics nodes in the zone. The other powers in the zone are computed by the decay heat model using the total fission power in the zone.

The volume data that are to be received by the server task are defined using the keyword ‘volume’ and the parameter is a user defined value that must by distinct from the identifiers for the volumes in the thermal-hydraulic model in the server task. For RELAP5-3D© serving as the server, the volume parameters must be numbers less than 1000000. Similarly, the heat structure temperatures to be received by the server task are defined using the keyword ‘heatstr’ and parameter values less than 10000. If RELAP5-3D© is serving as the server task, the reactor power may also be determined using a power table or control variable. These two options are specified using the keywords ‘tableout’ and ‘cntrlvar’ respectively. If these options are used, the five power values sent by the server task are all the same value, the output value from the table or control variable.

The implementation of the kinetics coupling has been verified using two sets of test cases, one set of test cases for point kinetics and one set of test cases for nodal kinetics. Each set of test cases consists of two test cases, an uncoupled test case and a coupled test case. The test cases are all based on the thermal-hydraulic model in the ‘typpwr’ installation test case. **Figure 19** shows a schematic of the uncoupled test case (test case ‘pvmnd’) used to verify the implementation of the kinetics coupling. **Figure 20** shows a detailed view of the reactor vessel for the uncoupled test case and **Figure 21** shows the schematic of the reactor core for the coupled test case (test case ‘pvmndx’) that uses semi-implicit coupling for thermal-hydraulic coupling. The middle four volumes and heat structures of the reactor core, i.e., pipe 335 in the uncoupled model, have been removed from the input model for the server task and have been moved to the input model for the client task. The coupled test case uses semi-implicit coupling of the thermal-hydraulic model in the server task to the thermal-hydraulic model in the client task. The server task serves as the master task for semi-implicit coupling and the client task serves as the slave task for semi-implicit coupling. **Figure 22** shows a schematic of the nodal kinetics model in the server task. The figure shows the core model for the uncoupled version of the test case on the left and the coupled version of the test case on the right. Each zone has a single volume and a single heat structure but zones can have multiple volumes and multiple heat structures. The middle four zones in the server task are shown as having phantom volumes and heat structures because these volumes and heat structures do not exist in the thermal-hydraulic model for the server task. Their conditions are computed by the thermal-hydraulic model in the client task. The arrows in **Figure 22** show the thermal-hydraulic data flow between the client task and the server task.

The point kinetics test cases are the ‘pvmpt’ test cases and the nodal kinetics test cases are the ‘pvmnd’ test cases. The uncoupled test cases use RELAP5-3D© input decks pvmpt.i and pvmnd.i respectively and the coupled test cases use the ‘pvmpts’ (the server task) and ‘pvmptc’ (the client task) input decks for the coupled point kinetics test case and the ‘pvmnds’ (the server task) and ‘pvmndc’ (the client task) input decks for the server and client tasks in the coupled nodal kinetics test case. The template files for the point kinetics and nodal kinetics test cases are ‘pvmptx’ and pvmndx’ respectively. **Figure 23** shows the template file for the point kinetics test case and **Figure 24** shows the template file for the nodal kinetics test case.

The figures show that the data to be transferred between the server and client tasks are defined by pairs of words as is used by explicit and semi-implicit coupling. Remember that the way the data items are specified to the coupled codes is code specific and that using pairs of words is specific to RELAP5-3D© and may be different when coupling different codes to RELAP5-3D©. **Figure 24** shows how volume numbers less than 1000000 and heat structure numbers less than 10000 are used by the server task to receive data for phantom volumes and phantom heat structures that are not part of its thermal-hydraulic model.

The implementation of the kinetic coupling was verified by comparing the results of the coupled and uncoupled test cases where identical results were expected and where identical results were computed. The test cases used for the verification of the kinetics coupling use both thermal-hydraulic coupling and the kinetics coupling. However, this is not a requirement of kinetic coupling and the server task could be a pure kinetics code having no thermal-hydraulic model for the reactor core. In this case, all of the thermal-hydraulic conditions for the reactor code must be obtained from the client code.

4.4 Control Systems Coupling

Control system coupling is the last type of coupling and like kinetics coupling is a specialized type of synchronous explicit coupling. The assumed order of computations is to advance the thermal-hydraulic model, then advance the kinetics model, and finally advance the control systems model. This is the order of computations in RELAP5-3D©. The control systems coupling in RELAP5-3D© is implemented by a new type of control block called the ‘cplfnctn’ control block. This control block can send data to its analog in another task, and can receive data from its analog in the other task or from a different task. The control block first sends any data specified by the PVMEXEC program and then listens to receive any data specified by the PVMEXEC program. Because the control blocks in a RELAP5-3D© control systems model are updated in numerical order, the sends and receives are not coordinated by the PVMEXEC program as is done for parallel, explicit coupling. The user must be careful in ordering the control blocks in the coupled models so that when a control block in one task is sending data, the analogous control component in the other coupled task is listening to receive that data and vice-versa or a deadlock will occur. A deadlock occurs when both tasks are either listening to receive a message or are both listening to receive the acknowledgement to a message that they have just sent.

The ‘cplfnctn’ control block in RELAP5-3D© can send multiple data items and can receive multiple data items. The data items that are to be sent must be data items that are defined in the RELAP5-3D© input model. A input error results if the user tries to send a data item that is not part of the RELAP5-3D© input deck. When receiving data items, a control block needs to store the values so that they may be accessible to the other models in RELAP5-3D©. The mechanism chosen for RELAP5-3D© was to use the RELAP5-3D© interactive variables. The user must define as least as many interactive variables as there are values to be received by the several ‘cplfnctn’ control blocks. The variables to be sent or received by RELAP5-3D© for control systems coupling are specified in the ‘control’ section of the input deck for the PVMEXEC program. The data items are described by the keyword ‘extfnctn’ followed by the control block number of the ‘cplfnctn’ control block in the RELAP5-3D© input deck. This pair of descriptors is followed by pairs of descriptors, a name string and a integer parameter, that describe a data item in the RELAP5-3D© database. As many pairs of data descriptors are entered as necessary to specify the data items for that ‘cplfnctn’ control block. Multiple ‘extfnctn’ specifications may be entered on the same line in the input file for the PVMEXEC program. It is unfortunate that the identifier for a coupling control block in the input files for the PVMEXEC program, the string ‘extfnctn’, is different from the name of the coupling control block in RELAP5-3D©, the string ‘cplfnctn’.

Two test cases were used to verify the implementation of the control system coupling: ‘pvmcs’, and ‘pvmcsx’. **Figure 25** shows the schematic of a portion of the control system of the ‘pvmcs’ installation test case, which is the uncoupled analogue of the coupled test case ‘pvmcsx’. This test case is identical to the ‘edhtrk’ test case that is used as the uncoupled analogue of the ‘pvmedax’ coupling test case. The hydraulic coupling in the ‘pvmcsx’ test case is identical to the hydraulic coupling portion of the ‘pvmedax’ test case except that the tasks are defined as synchronous tasks instead of asynchronous tasks. Synchronous coupling is used for the control system test cases because only synchronous coupling has been implemented for control systems coupling in the PVMEXEC program and in RELAP5-3D©.

A schematic of the control systems in the coupled version of this test case is shown in **Figure 26**. The template for the input file for the PVMEXEC program for this test case is shown in **Figure 27**. Most of the control system in the ‘pvmcs’ test case is included in the input file for the ‘child’ task of the coupled simulation but control blocks 12 and 13 in the uncoupled test case are moved to the ‘parent’ task. These control blocks in the ‘parent’ task receive their input from interactive variable ‘extvar1’ which in turn receives its value from ‘cplfnctn’ control block 1. Control blocks 12 and 13 in the ‘child’ task are replaced by a ‘cplfnctn’ control block as shown in **Figure 26**. This control block both sends data to the ‘parent’ task and receives data from the ‘parent’ task. It sends its input data to ‘cplfnctn’ control block 1 in the ‘parent’ task and receives its output data from ‘cplfnctn’ control block 14 in the ‘parent’ task.

Figure 26 illustrates the use of interactive variables to store the values received by the ‘cplfnctn’ control blocks. Interactive variables are specified using the name of the interactive variable and the parameter 1000000000. It is the parameter 1000000000 that distinguishes a variable as an interactive variable in RELAP5-3D©. The user can verify that the variable named ‘extvar1’ specified in the input file for the PVMEXEC program is defined in the input deck for the parent task, i.e., file pvmcsp.i, and that the

interactive variables specified in the input file for the PVMEXEC program for the child task are defined in the RELAP5-3D© input deck for the child task, i.e., file pvmcsc.i, if they have access to the input files for the installation test cases. The implementation of the control systems coupling was verified by comparing the output of the uncoupled test case 'pvmcs' to the output of the coupled version of the test case 'pvmcsx'. The output of the regular control blocks, i.e., the non-coupling control blocks, was expected to be identical and identical values were computed.

5 Coupling Errors

There are many types of errors that can occur in a coupled computation and the coupling methodology has been designed to detect a number of these errors and fail gracefully. The first type of error that can occur is that the virtual machine may fail to start up correctly. The PVM software will write a message to the screen and then terminate. This type of error occurs because another virtual machine is already running or a previous coupled run failed and its virtual machine was not shut down properly. In either case the user must clean up the temporary files used by PVM before trying the failed run again. PVM writes a file named pvmd.<uid> where the string <uid> is the identification number of the user executing the coupled run. This file is written by default to the /tmp directory. The user may redirect this file to the directory defined in the PVM_TMP environmental variable. If this file is present, the virtual machine will fail to start up and the user must either remove this file or change the location for the file. The virtual machine may also fail to start up if the user has failed to define the PVM_ROOT and PVM_ARCH environmental variables that define the location of the PVM software library.

The second type of error is an error in the input processing sections of the coupled codes. The PVMEXEC program sends messages to the coupled codes during their input processing phase to define the data that are to be exchanged between the several coupled codes. The input processors of the coupled codes check that the variables named in the messages received from the PVMEXEC program exist in the database of the code and return a failure condition to the executive program at the end of initialization if the variables are not defined in the input file. Additionally, a coupled code may fail during initialization because of errors in its input deck. In both of these cases, the code returns a failure condition to the PVMEXEC program. The PVMEXEC program displays the initialization status of the coupled codes on the terminal screen and in its output file. If there is a failure in the initialization of any of the coupled codes, the coupled run is terminated and the virtual machine is terminated gracefully.

The third kind of error is an error in the transient time step advancements. Several conditions may cause the coupled run to terminate. One of the coupled codes may experience a hard failure such as a divide by zero and its execution terminated by the operating system. The PVM coupling has been coded to detect the failure of one of the coupled tasks and to terminate the other tasks gracefully. The tasks that have not failed will usually write a message saying that they have timed out while waiting for a message from the failed task. They will also inform the PVMEXEC program of this condition and the PVMEXEC program will direct the remaining tasks to terminate after writing a final restart record. Another kind of timeout may occur if the user has specified a wait time that is too small using the keyword 'awaits'. This detection and graceful shutdown task will occur UNLESS the user has told the task to wait 'forever' using the keyword 'awaits' in the input file for the PVMEXEC program. An infinite wait time, i.e., a wait time of

-1.0, should never be used for production runs because the codes will never timeout when a failure condition is encountered. The user should consult the output file of the code experiencing the hard failure or timeout to determine what has happened.

Another type of error that will cause a coupled run to terminate is if one of the coupled tasks encounters an error in its computations from which it cannot recover. For example, RELAP5-3D© cannot recover from a fluid property error. In this case RELAP5-3D© tells the PVMEXEC program that it must terminate its execution and the PVMEXEC program then tells all of the other coupled codes that they should also terminate their execution. It then terminates the virtual machine gracefully after all of the coupled codes have ceased their execution. The user should examine the output file of the code experiencing the problem to determine how to fix it.

The last kind of error is a deadlock where all of the coupled codes are listening to receive data from another code or all codes have just sent a message and are waiting to receive an acknowledgment for the message they just sent. The user will notice that the display on the terminal screen stops being periodically updated which happens when the coupled run is progressing normally. In this case, all of the codes should timeout waiting for the message or the acknowledgment. This kind of deadlock should only occur in control systems coupling where the user has defined the control blocks in the wrong order. Any other type of deadlock indicates an error in the coupling methodology and should be referred to the code support staff.

6 References

1. W. L. Weaver, *The Application Programming Interface for the PVMEXEC Program and Associated Code Coupling System*, INL/EXT-05-00107, Idaho National Laboratory, March 2005.

2. W. L. Weaver, *Programmers Manual for the PVMEXEC Program*, INL/EXT-05-00159, Idaho National Laboratory, March 2005.

3. W. L. Weaver, *Programmers Manual for the PVM Interface in the RELAP5-3D© Code*, INL/EXT-05-00203, Idaho National Laboratory, March 2005.

4. C. Y. Paik, L. E. Hochreiter, J. M. Kelly, and R. J. Xohrt, *Analysis of FLECHT SEASET 163-Rod Blocked Bundle Data Using COBRA-TF*, NUREG/CR-4166, EPRI-NP-4111, WCAP-10375, October 1985.

5. The RELAP5 Code Development Team, *RELAP5-3D© Code Manual*, INEEL-EXT-98-00834, Revision 4.0, Idaho National Laboratory, June 2012.

6. Fluent Corporation, *Fluent 6 User's Guide*, 2001.

7. Safety Code Development Group, *TRAC-PF1/MOD1: An Advanced Best-Estimate Computer Program for Pressurizer Water Reactor Thermal-Hydraulic Analysis*, LA-10157-MS, NUREG/CR-3858, Los Alamos National Laboratory, July 1986.

8. J. W. Spore et al., *TRAC-M/FORTRAN 90 (Version 3.0) Theory Manual*, NUREG/CR-6724, Los Alamos National Laboratory and Pennsylvania State University, July 2001.

9. K. K. Murata et al., *Code Manual for CONTAIN 2.0: A Computer Code for Nuclear Reactor Containment Analysis*, SAND97-1735, NUREG/CR-6533, Sandia National Laboratory, December 1997.

10. R. O. Gauntt et al., *MELCOR Computer Code Manuals: Version 1.8.5*, SAND2000-2417, NUREG/CR-6119, Sandia National Laboratory, October 2000.

11. P. J. Turinsky et al., *NESTLE: A Few-Group Neutron Diffusion Equation Solver Utilizing the Nodal Expansion Method for Eigenvalue, Adjoint, Fixed-Source Steady-State and Transient Problems*, EGG-NRE-11406, Idaho National Engineering Laboratory, June 1994.

12. T. Downar et al., *PARCS: Purdue Advanced Reactor Core Simulator*, PU/NE-98-26, Purdue University, September 1998.

13. A. Geist et al., *PVM (Parallel Virtual Machine) User's Guide and Reference Manual*, ORNL/TM-12187, Oak Ridge National Laboratory, February 1993.

14. R. P. Martin, "RELAP5/MOD3 Code Coupling Model," *Nuclear Safety, 36*, 1995, pp. 290-299.

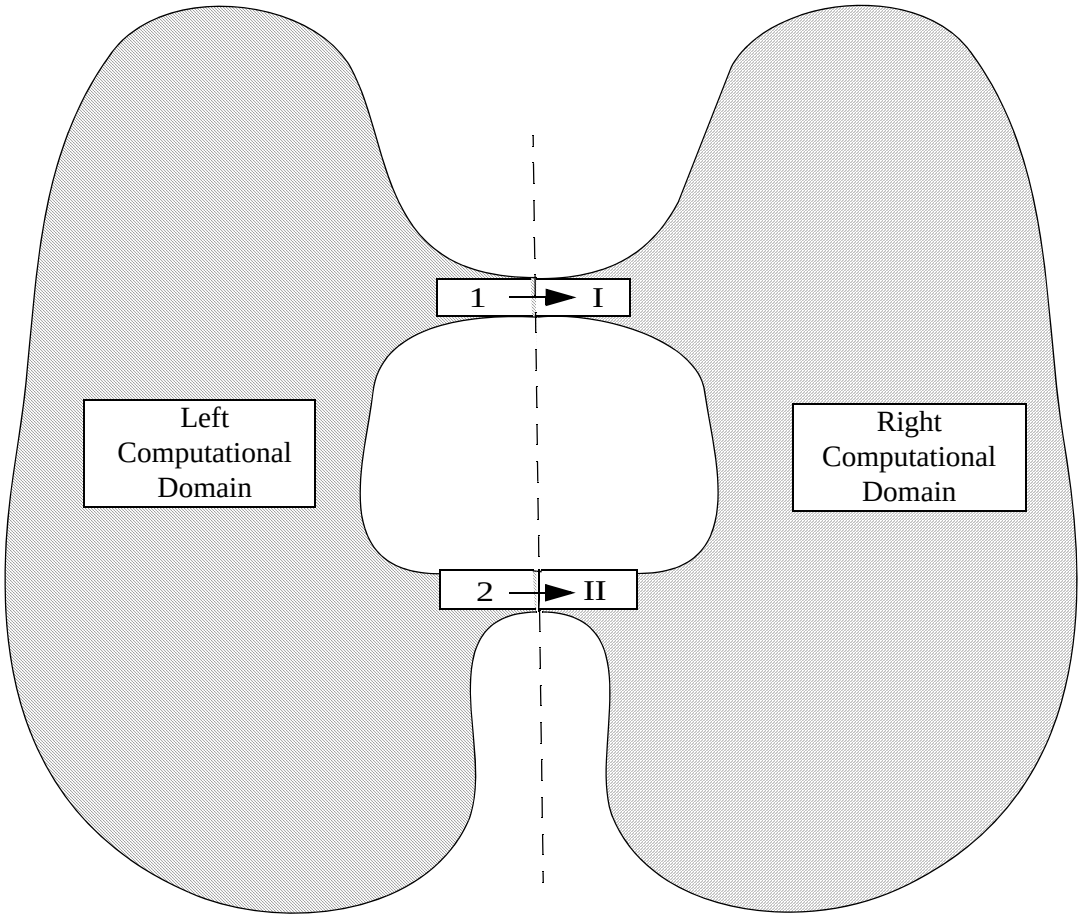

Figure 1 Schematic for coupled problem domain

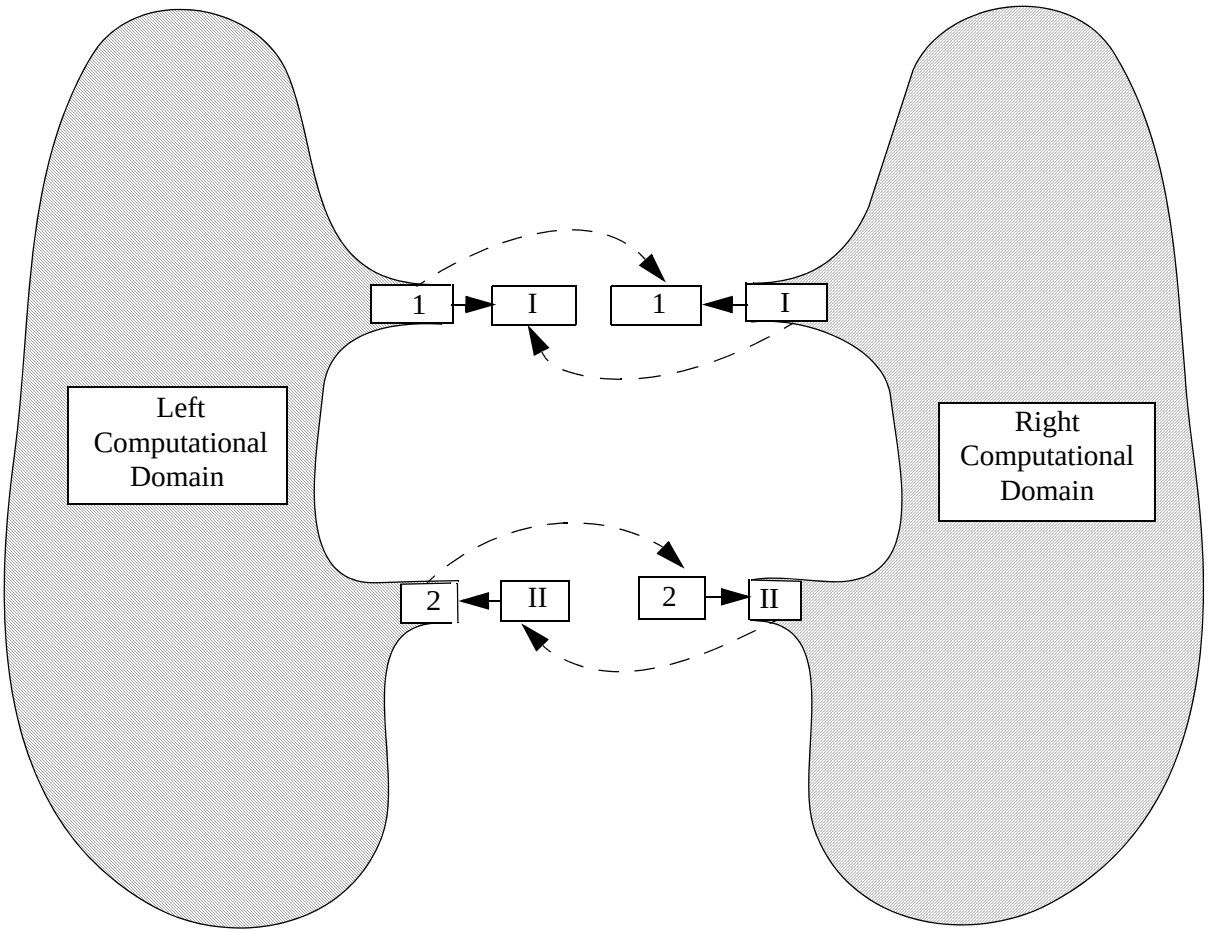

Figure 2 Schematic for parallel explicit coupling

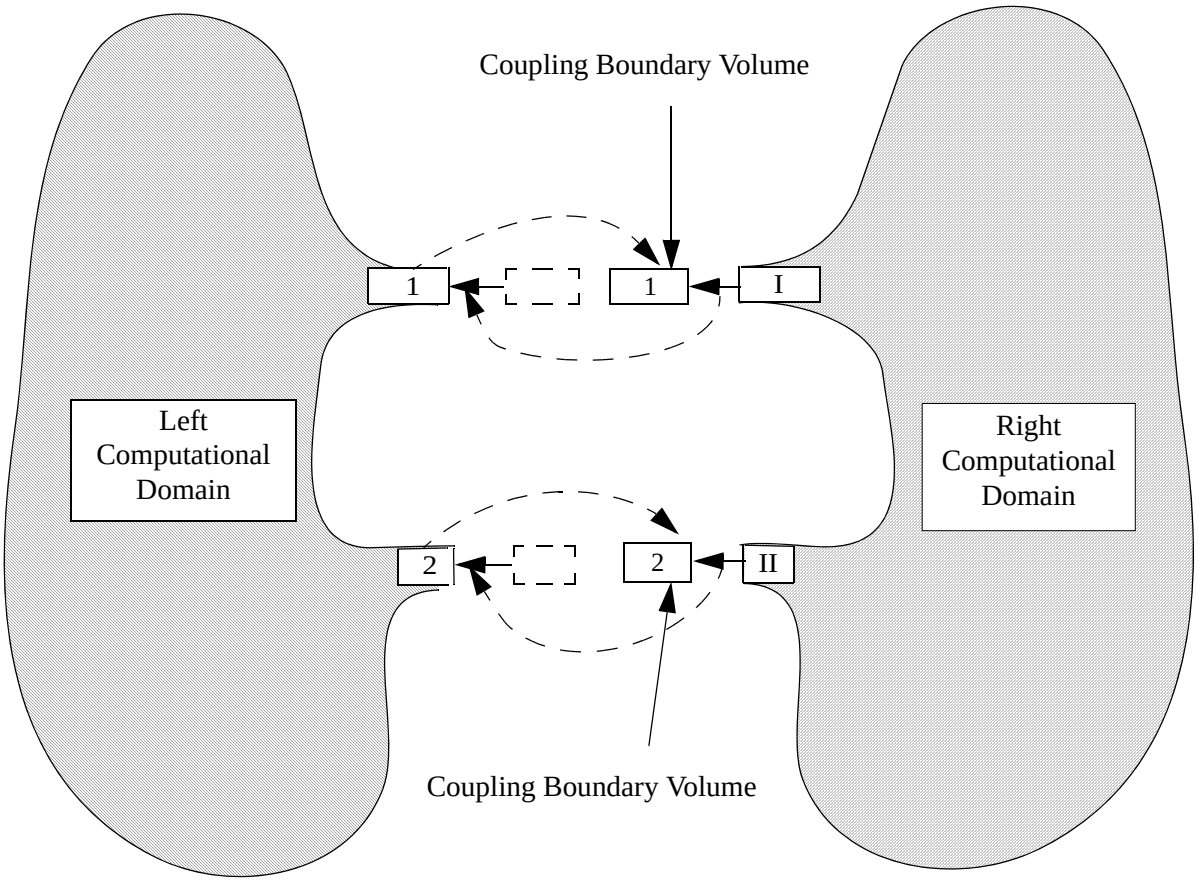

Figure 3 Schematic for semi-implicit and sequential explicit thermal-hydraulic coupling

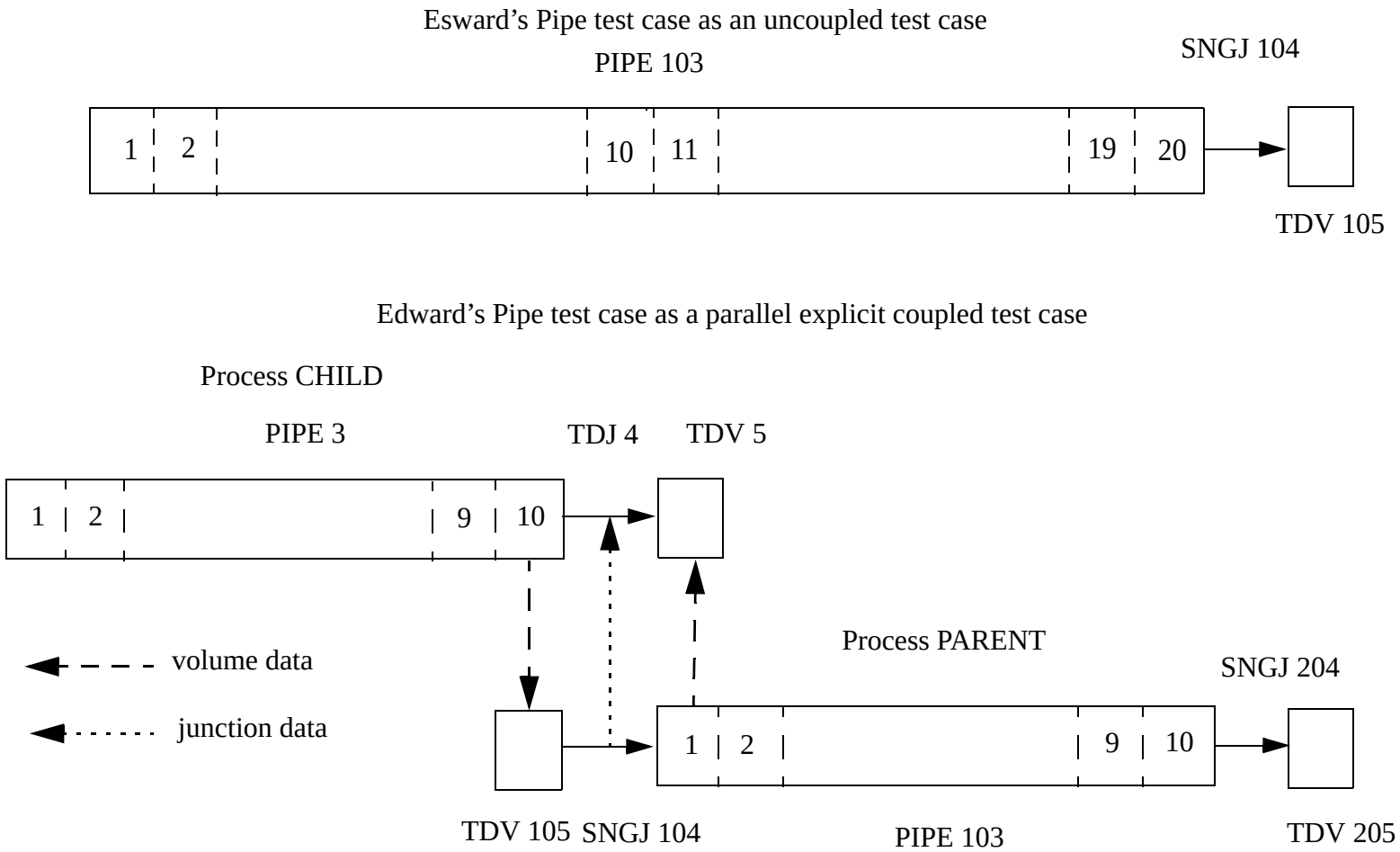

Figure 4 Schematic of PVMEDA parallel explicit test case

```
1.          # pvm asynchronous explicit test case pvmeda
2.          virtual
3.                  MACHINE wd=WHERE ep=WHERE
4.                  write pvmedax.out
5.          simulation
6.                  name edward's pipe asynchronous explicit coupling test case
7.          processes
8.                  MACHINE
9.                  parent asynchronous relap5.x -i pvmedap.i -o pvmedap.p -r pvmedap.r
10.                 parent writes pvmedap.out
11.                 child asynchronous relap5.x -i pvmedac.i -o pvmedac.p -r pvmedac.r
12.                 child writes pvmedac.out
13.         messages
14.                 explicit
15.                 parent sends child p 103010000 uf 103010000 ug 103010000
16.                 child receives parent p 5010000 uf 5010000 ug 5010000
17.                 parent sends child voidg 103010000
18.                 child receives parent voidg 5010000
19.                 parent sends child velfj 104000000 velgj 104000000
20.                 child receives parent velfj 4000000 velgj 4000000
21.                 parent sends child  mflowgj 104000000 mflowfj 104000000
22.                 child receives parent mflowgj 4000000 mflowfj 4000000
23.                 child sends parent p 3100000 uf 3100000 ug 3100000
24.                 parent receives child p 105010000 uf 105010000 ug 105010000
25.                 child sends parent voidg 3100000
26.                 parent receives child voidg 105010000
27.     #           child sends parent velfj 4000000 velgj 4000000
28.     #           parent receives child  velfj 104000000 velgj 104000000
29.     #           child sends parent mflowgj 4000000 mflowgj 4000000
30.     #           parent receives child mflowgj 104000000 mflowfj 104000000
31.         timesteps
32.         # 0.0050    0.0000001  0.00005  7   20  50  100  1
33.                 0.050    0.0000001  0.0001  7   10  50  100  1
34.         # 0.5000    0.0000001  0.0001  7   10  50  100  1
```

Figure 5 Listing of PVMEDAX template file

```
# pvm asynchronous explicit test case pvmeda
        virtual
                MACHINE wd=WHERE ep=WHERE
        processes
                MACHINE
                parent asynchronous relap5.x -i pvmedap.i -o pvmeda1p.p -r pvmeda1p.r
                child asynchronous relap5.x -i pvmedac.i -o pvmeda1c.p -r pvmeda1c.r
        simulation
                start time 0.0001
        messages
                explicit
                parent sends child p 103010000 uf 103010000 ug 103010000
                child receives parent p 5010000 uf 5010000 ug 5010000
                parent sends child voidg 103010000
                child receives parent voidg 5010000
                parent sends child velfj 104000000 velgj 104000000
                child receives parent velfj 4000000 velgj 4000000
                parent sends child  mflowgj 104000000 mflowfj 104000000
                child receives parent mflowgj 4000000 mflowfj 4000000
                child sends parent p 3100000 uf 3100000 ug 3100000
                parent receives child p 105010000 uf 105010000 ug 105010000
                child sends parent voidg 3100000
                parent receives child voidg 105010000
        #child sends parent velfj 4000000 velgj 4000000
        #parent receives child  velfj 104000000 velgj 104000000
        #child sends parent mflowgj 4000000 mflowgj 4000000
        #parent receives child mflowgj 104000000 mflowfj 104000000
        timesteps
        # 0.0050    0.0000001  0.00005  7   20  50  100  1
                0.050    0.0000001  0.0001  7   10  50  100  1
        # 0.5000    0.0000001  0.0001  7   10  50  100  1
```

Figure 6 Listing of PVMEDA1X template file

```
# pvm asynchronous explicit test case pvmeda
        virtual
                MACHINE wd=WHERE ep=WHERE
        processes
        MACHINE
                parent asynchronous relap5.x -i pvmedarp.i -o pvmedarp.p -r pvmedarp.r
                child asynchronous relap5.x -i pvmedarc.i -o pvmedarc.p -r pvmedarc.r
        simulation
                restart time 0.02
                name edward's pipe asynchronous explicit coupling test case
        messages
                explicit
                parent sends child p 103010000 uf 103010000 ug 103010000
                child receives parent p 5010000 uf 5010000 ug 5010000
                parent sends child voidg 103010000
                child receives parent voidg 5010000
                parent sends child velfj 104000000 velgj 104000000
                child receives parent velfj 4000000 velgj 4000000
                parent sends child  mflowgj 104000000 mflowfj 104000000
                child receives parent mflowgj 4000000 mflowfj 4000000
                child sends parent p 3100000 uf 3100000 ug 3100000
                parent receives child p 105010000 uf 105010000 ug 105010000
                child sends parent voidg 3100000
                parent receives child voidg 105010000
        #child sends parent velfj 4000000 velgj 4000000
        #parent receives child  velfj 104000000 velgj 104000000
        child sends parent mflowgj 4000000 mflowgj 4000000
        #parent receives child mflowgj 104000000 mflowfj 104000000
        timesteps
        # 0.0050    0.0000001  0.00005  7   20  50  100  1
                 0.050    0.0000001  0.0001  7   10  50  100  1
        # 0.5000    0.0000001  0.0001  7   10  50  100  1
```

Figure 7 Listing of PVMEDARX template file

```
# pvm asynchronous explicit test case pvmeda
        virtual
                MACHINE wd=WHERE ep=WHERE
        processes
                MACHINE
                parent asynchronous relap5.x -i pvmedarp.i -o pvmedar1p.p -r pvmedar1p.r
                child asynchronous relap5.x -i pvmedarc.i -o pvmedar1c.p -r pvmedar1c.r
        simulation
                 restart time -1.0
        messages
                explicit
                parent sends child p 103010000 uf 103010000 ug 103010000
                child receives parent p 5010000 uf 5010000 ug 5010000
                parent sends child voidg 103010000
                child receives parent voidg 5010000
                parent sends child velfj 104000000 velgj 104000000
                child receives parent velfj 4000000 velgj 4000000
                parent sends child  mflowgj 104000000 mflowfj 104000000
                child receives parent mflowgj 4000000 mflowfj 4000000
                child sends parent p 3100000 uf 3100000 ug 3100000
                parent receives child p 105010000 uf 105010000 ug 105010000
                child sends parent voidg 3100000
                parent receives child voidg 105010000
        #child sends parent velfj 4000000 velgj 4000000
        #parent receives child  velfj 104000000 velgj 104000000
        #child sends parent mflowgj 4000000 mflowgj 4000000
        #parent receives child mflowgj 104000000 mflowfj 104000000
        timesteps
        # 0.0050    0.0000001  0.00005  7   20  50  100  1
                 0.060    0.0000001  0.0001  7   10  50  100  1
        # 0.5000    0.0000001  0.0001  7   10  50  100  1
```

Figure 8 Listing of PVMEDAR1X template file

```
0 Variables for Explicit Send Message Tag   1
  variable code    parameter
 p                103010000
 uf               103010000
 ug               103010000
0 Variables for Explicit Send Message Tag   3
  variable code    parameter
 voidg            103010000
0 Variables for Explicit Send Message Tag   5
  variable code    parameter
 velfj            104000000
 velgj            104000000
0 Variables for Explicit Send Message Tag   7
  variable code    parameter
 mflowgj          104000000
 mflowfj          104000000
0 Variables for Explicit Receive Message Tag   9
  variable code    parameter
 p                105010000
 uf               105010000
 ug               105010000
0 Variables for Explicit Receive Message Tag  11
  variable code    parameter
 voidg            105010000
```

Figure 9 Partial listing of output file from ‘parent’ process in PVMEDAX test case

```
0 Variables for Explicit Send Message Tag   9
   variable code    parameter
 p                  3100000
 uf                 3100000
 ug                 3100000
0 Variables for Explicit Send Message Tag  11
   variable code    parameter
 voidg              3100000
0 Variables for Explicit Receive Message Tag   1
   variable code    parameter
 p                  5010000
 uf                 5010000
 ug                 5010000
0 Variables for Explicit Receive Message Tag   3
   variable code    parameter
 voidg              5010000
0 Variables for Explicit Receive Message Tag   5
   variable code    parameter
 velfj              4000000
 velgj              4000000
0 Variables for Explicit Receive Message Tag   7
   variable code    parameter
 mflowgj            4000000
 mflowfj            4000000
```

Figure 10 Partial listing of output file from ‘child’ process in PVMEDAX test case

Edward's Pipe test case as a sequential explicit coupled test case

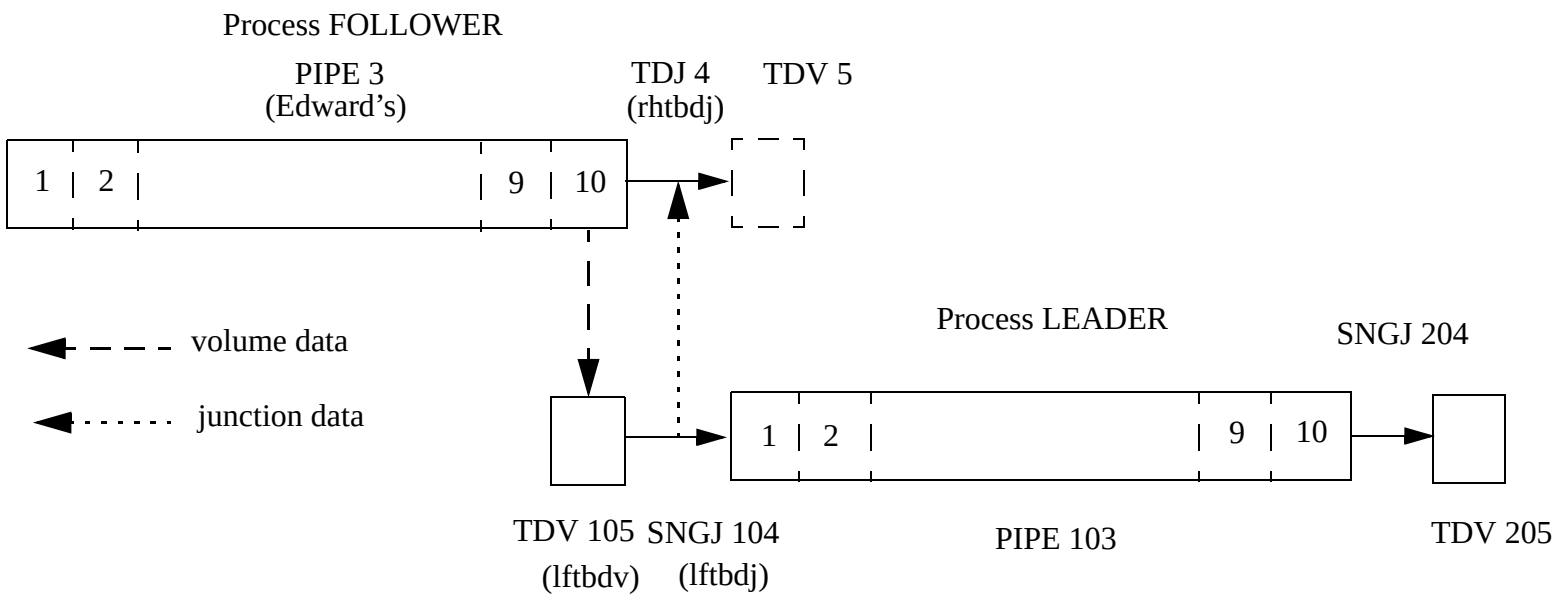

Figure 11 Schematic of PVMEDSX sequential explicit test case

```
# pvm asynchronous explicit conserving test case pvmedsx
        virtual
                MACHINE wd=WHERE ep=WHERE
        #    wait 10000.0  1
        processes
                MACHINE
                leader asynchronous relap5.x -i pvmedsl.i -o pvmedsl.p -r pvmedsl.r
                follower asynchronous relap5.x -i pvmedsf.i -o pvmedsf.p -r pvmedsf.r
        messages
                explicit
                leader preceeds follower
        # follower sends volume conditions to leader
                follower sends leader edward's 10
# leader receives volume conditions from follower
                leader receives follower lftbdv 1
        # leader sends average junction conditions to follower
                leader sends follower lftbdj 0
        # follower receives average junction conditions from leader
                follower receives leader rhtbdj 0
        timesteps
                0.050    0.0000001  0.0001  7   10  50  100  1
```

Figure 12 Listing of PVMEDSX template file

```
0 Variables for Explicit Send Message Tag   3
  variable code    parameter
 voidgj            104000000
 rhogj             104000000
 ugj               104000000
 qualaj            104000000
 velgj             104000000
 voidfj            104000000
 rhofj             104000000
 ufj               104000000
 velfj             104000000
 qualnj1           104000000
 qualnj2           104000000
 qualnj3           104000000
 qualnj4           104000000
 qualnj5           104000000
 aflowgj           104000000
 uflowgj           104000000
 uflowfj           104000000
 mflowgj           104000000
 mflowfj           104000000
 vflowgj           104000000
 vflowfj           104000000
 flenthg           104000000
 flenthf           104000000
 flentha           104000000
 nflowgj1          104000000
 nflowgj2          104000000
 nflowgj3          104000000
 nflowgj4          104000000
 nflowgj5          104000000
0 Variables for Explicit Receive Message Tag   1
  variable code    parameter
 p                 105010000
 voidg             105010000
 voidf             105010000
 ug                105010000
 uf                105010000
 quala             105010000
 rhog              105010000
 rhof              105010000
 tempg             105010000
 tempf             105010000
 qualan1           105010000
 qualan2           105010000
 qualan3           105010000
 qualan4           105010000
 qualan5           105010000
```

Figure 13 Partial listing of output file from ‘leader’ process in PVMEDSX test case

```
 Variables for Explicit Send Message Tag   1
   variable code    parameter
 p                  3100000
 voidg              3100000
 voidf              3100000
 ug                 3100000
 uf                 3100000
 quala              3100000
 rhog               3100000
 rhof               3100000
 tempg              3100000
 tempf              3100000
 qualan1            3100000
 qualan2            3100000
 qualan3            3100000
 qualan4            3100000
 qualan5            3100000
0 Variables for Explicit Receive Message Tag   3
   variable code    parameter
 voidgj             4000000
 rhogj              4000000
 ugj                4000000
 qualaj             4000000
 velgj              4000000
 voidfj             4000000
 rhofj              4000000
 ufj                4000000
 velfj              4000000
 qualnj1            4000000
 qualnj2            4000000
 qualnj3            4000000
 qualnj4            4000000
 qualnj5            4000000
 aflowgj            4000000
 uflowgj            4000000
 uflowfj            4000000
 mflowgj            4000000
 mflowfj            4000000
 vflowgj            4000000
 vflowfj            4000000
 flenthg            4000000
 flenthf            4000000
 flentha            4000000
 nflowgj1           4000000
 nflowgj2           4000000
 nflowgj3           4000000
 nflowgj4           4000000
 nflowgj5           4000000
```

Figure 14 Partial listing of output file from ‘follower’ process in PVMEDSX test case

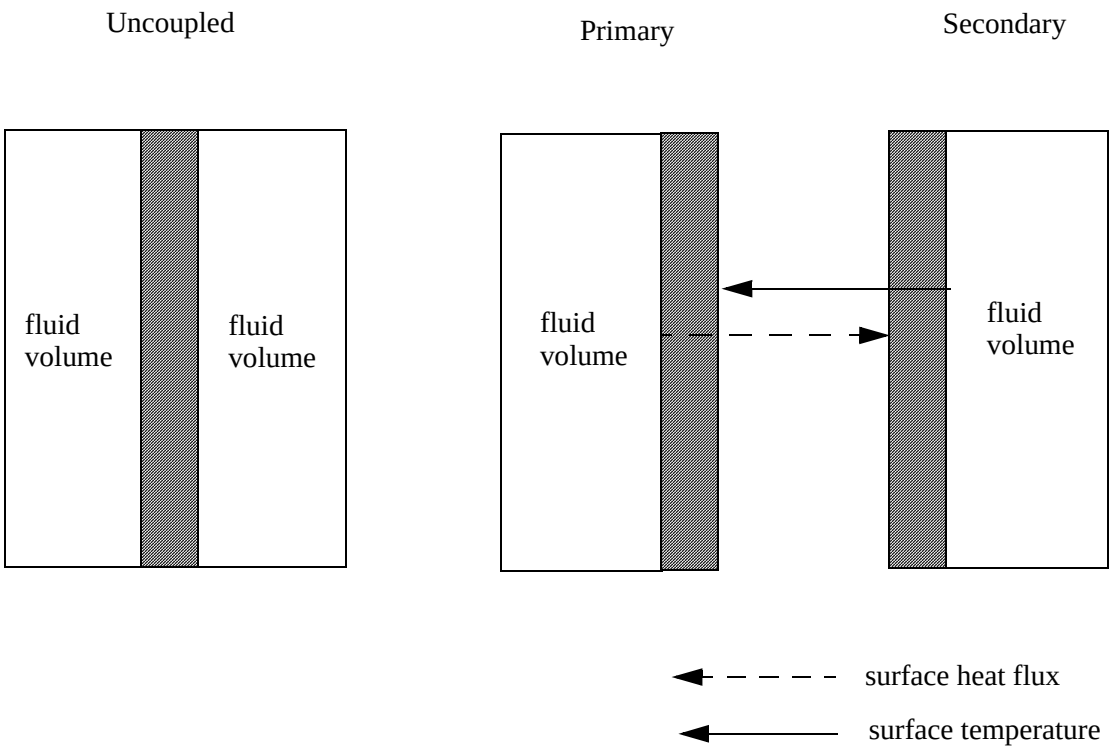

Figure 15 Schematic of heat structure coupling

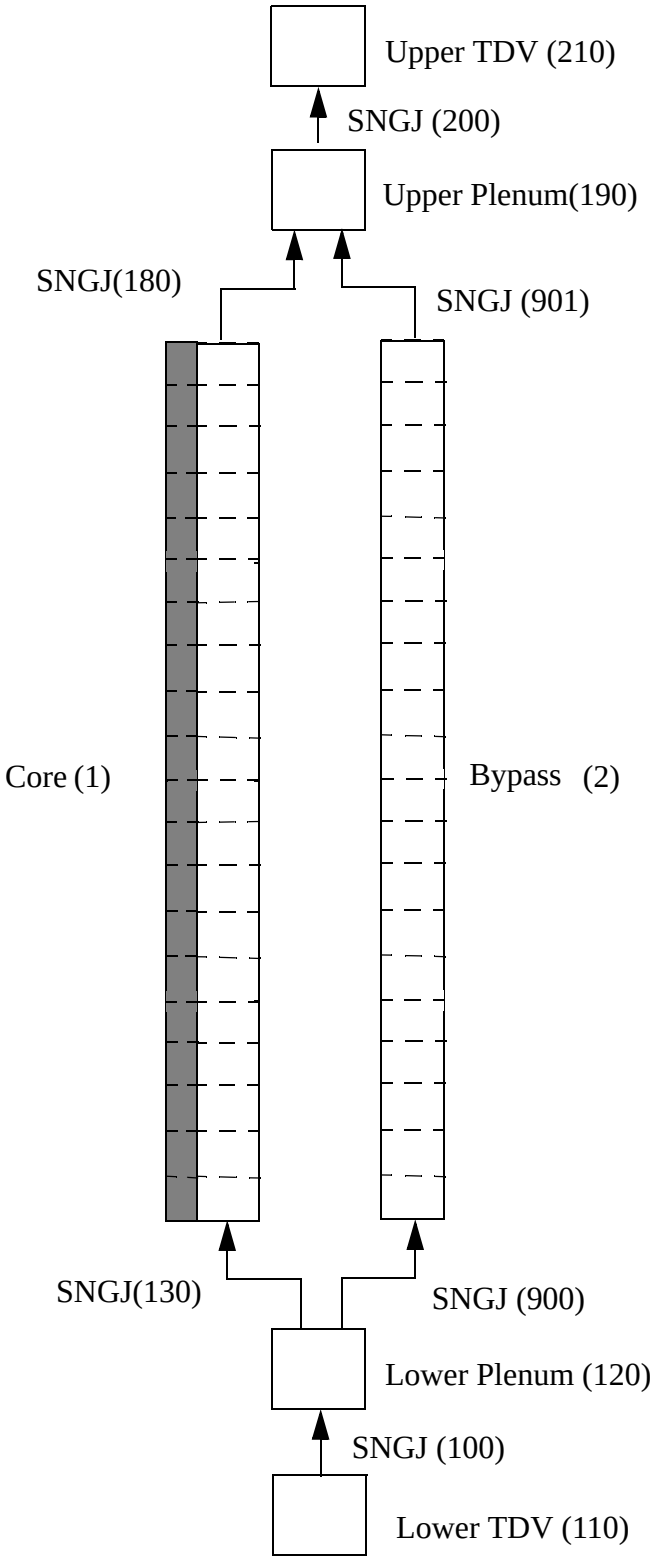

Figure 16 Schematic of uncoupled test case for semi-implicit coupling

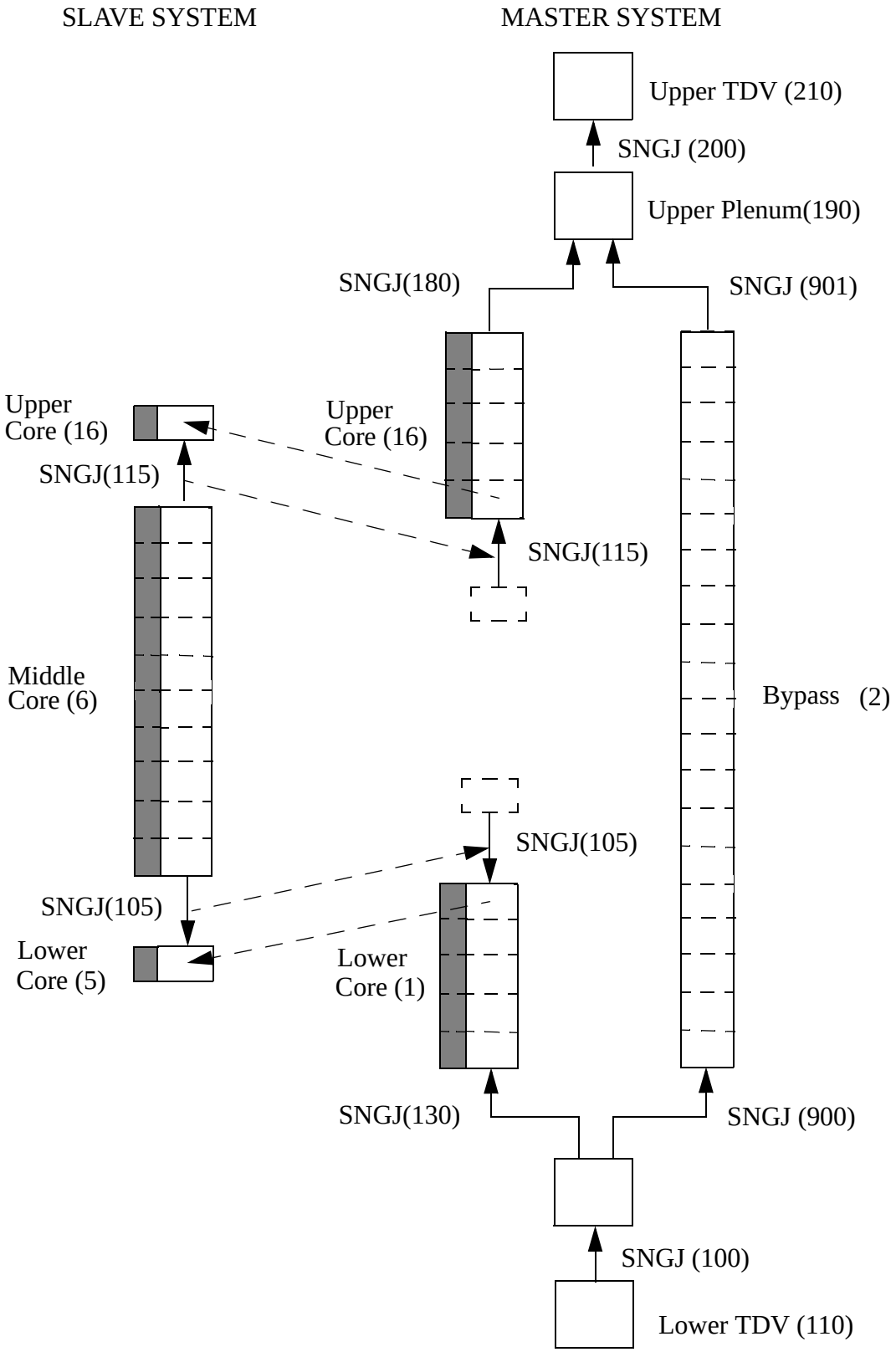

Figure 17 Schematic of coupled test case for semi-implicit coupling

```
# pvm semi-implicit test case pvmcore
virtual
        MACHINE wd=WHERE ep=WHERE
processes
    MACHINE
      primary synchronous relap5.x -i pvmcorep.i -o pvmcorep.p
      core synchronous relap5.x -i pvmcorec.i -o pvmcorec.p
messages
        semi-implicit
                primary sends core lrcore 5 upcore 1
                primary receives core lcrout 0 upcrin 0
                core sends primary lrcout 0 upcrin 0
                core receives primary lrcore 1 upcore 1
timesteps
 0.5000   0.000001  0.00625  403   1  20  500  0
 1.0000   0.000001  0.00625  403  20  20  500  0
 10.000   0.000001  0.0125   403  10  50  500  0
```

Figure 18 Listing of template file for ‘pvmcorex’ test case

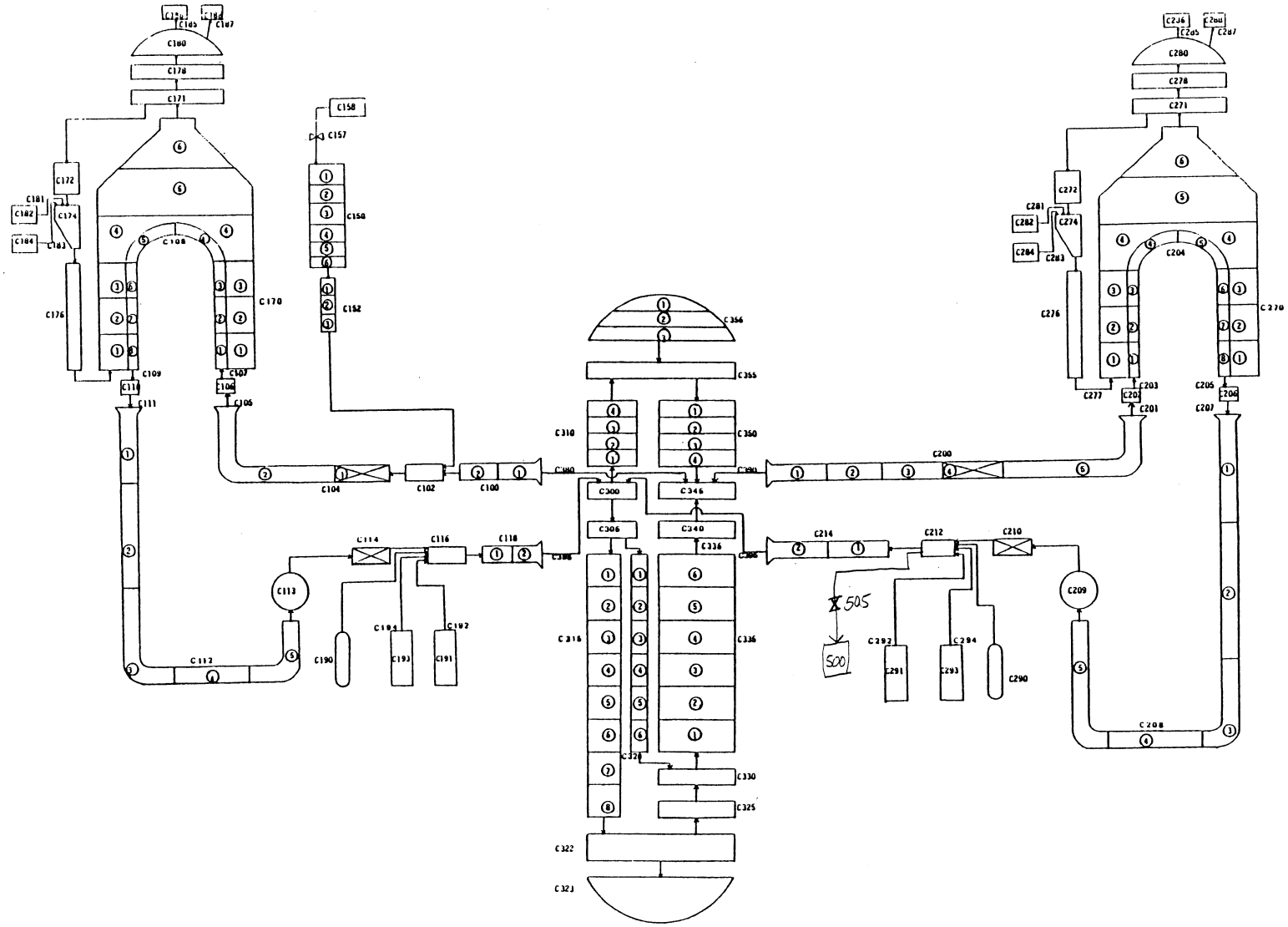

Figure 19 Schematic of TYPPWR test case

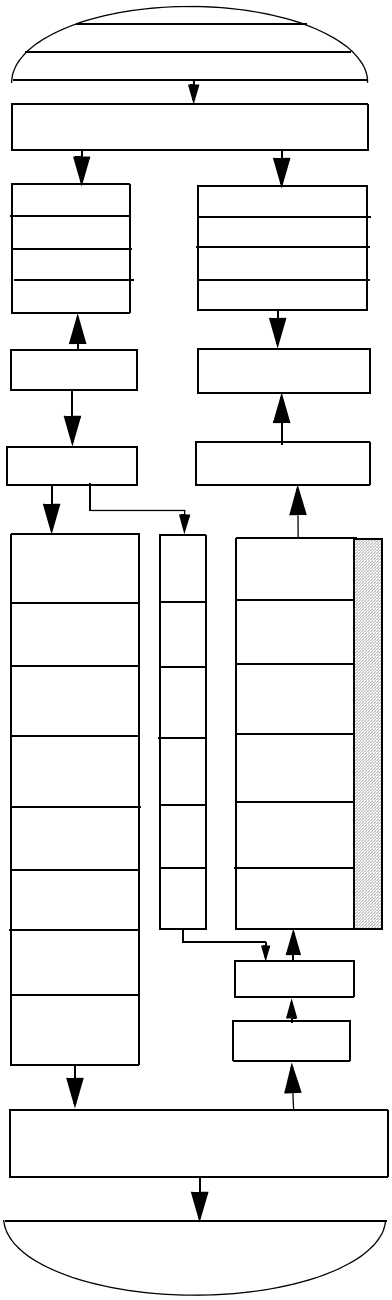

Figure 20 Schematic of reactor vessel in TYPPWR test case

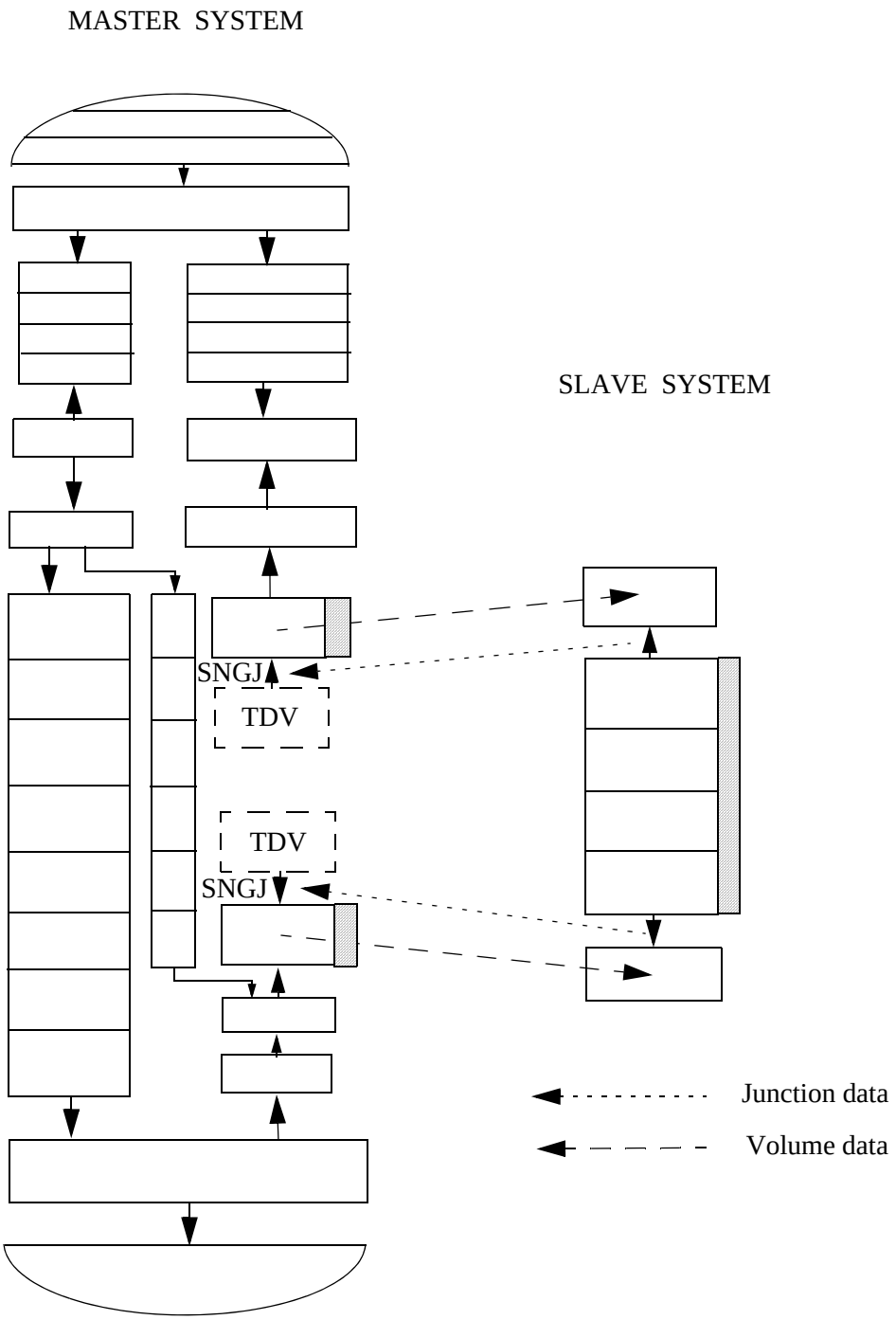

Figure 21 Schematic of coupled model of reactor vessel in kinetics coupling test cases

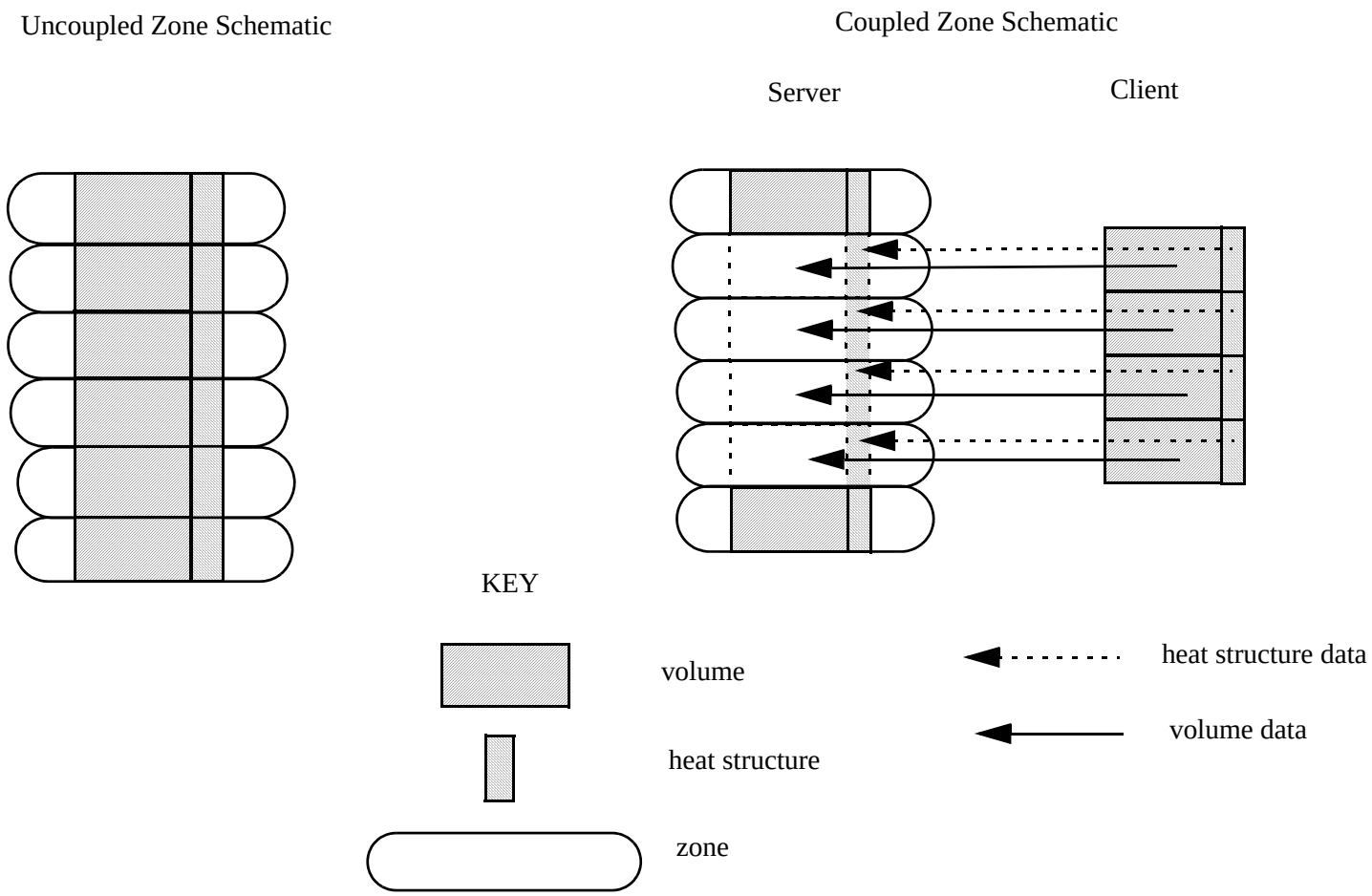

Figure 22 Schematic of Kinetics Zones

```
#  pvm executive input for point kinetics coupling
virtual
        MACHINE wd=WHERE ep=WHERE
processes
        MACHINE
            server synchronous relap5.x -i pvmpts.i -o pvmpts.p
            client synchronous relap5.x -i pvmptc.i -o pvmptc.p
messages
        semi-implicit
            server sends client lrcore 1 upcore 1
            client receives server lrcrbdv 1 upcrbdv 1
            client sends server corein 0 coreout 0
            server receives client lrcrout 0 upcrin 0
            kinetics
            server sends client power 0
            client receives server power 0
            client sends server core 1 core 2 core 3 core 4
            server receives client volume 33502 volume 33503 volume 33504 volume 33505
            client sends server heatstr 3350001 heatstr 3350002 heatstr 3350003 heatstr 3350004
            server receives client heatstr 1 heatstr 2 heatstr 3 heatstr 4
timesteps
        1.0 0.0000001 0.50  7 2 2 160 1
```

Figure 23 Listing of template file for pvmptx point kinetics coupling test case

```
#  pvm executive input for nodal kinetics coupling
virtual
        MACHINE wd=WHERE ep=WHERE
processes
        MACHINE
            server synchronous relap5.x -i pvmnds.i -o pvmnds.p
            client synchronous relap5.x -i pvmndc.i -o pvmndc.p
messages
        semi-implicit
            server sends client lrcore 1 upcore 1
            client receives server lrcrbdv 1 upcrbdv 1
            client sends server corein 0 coreout 0
            server receives client lrcrout 0 upcrin 0
        kinetics
            server sends client zone 3 zone 4 zone 5 zone 6
            client receives server zone 3 zone 4 zone 5 zone 6
            client sends server core 1 core 2 core 3 core 4
            server receives client volume 33502 volume 33503 volume 33504 volume 33505
            client sends server heatstr 3350001 heatstr 3350002 heatstr 3350003 heatstr 3350004
            server receives client heatstr 1 heatstr 2 heatstr 3 heatstr 4
timesteps
        1.00 0.0000001 0.03125  7 1 16 160 1
```

Figure 24 Listing of template file for pvmndx for nodal kinetics coupling test case

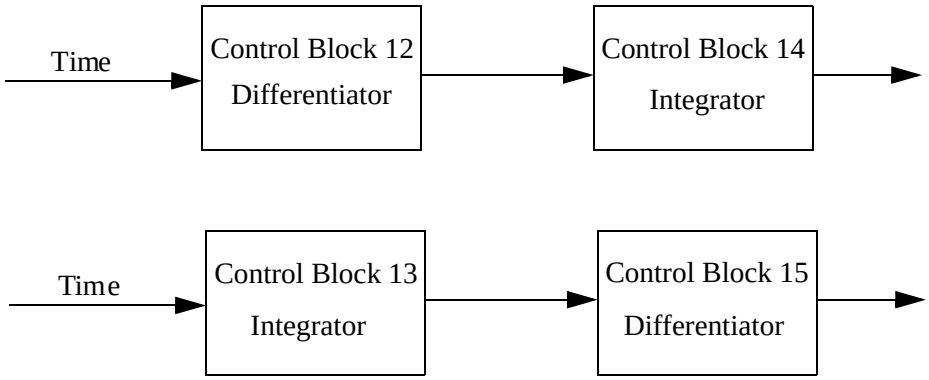

Figure 25 Schematic of uncoupled control systems test case

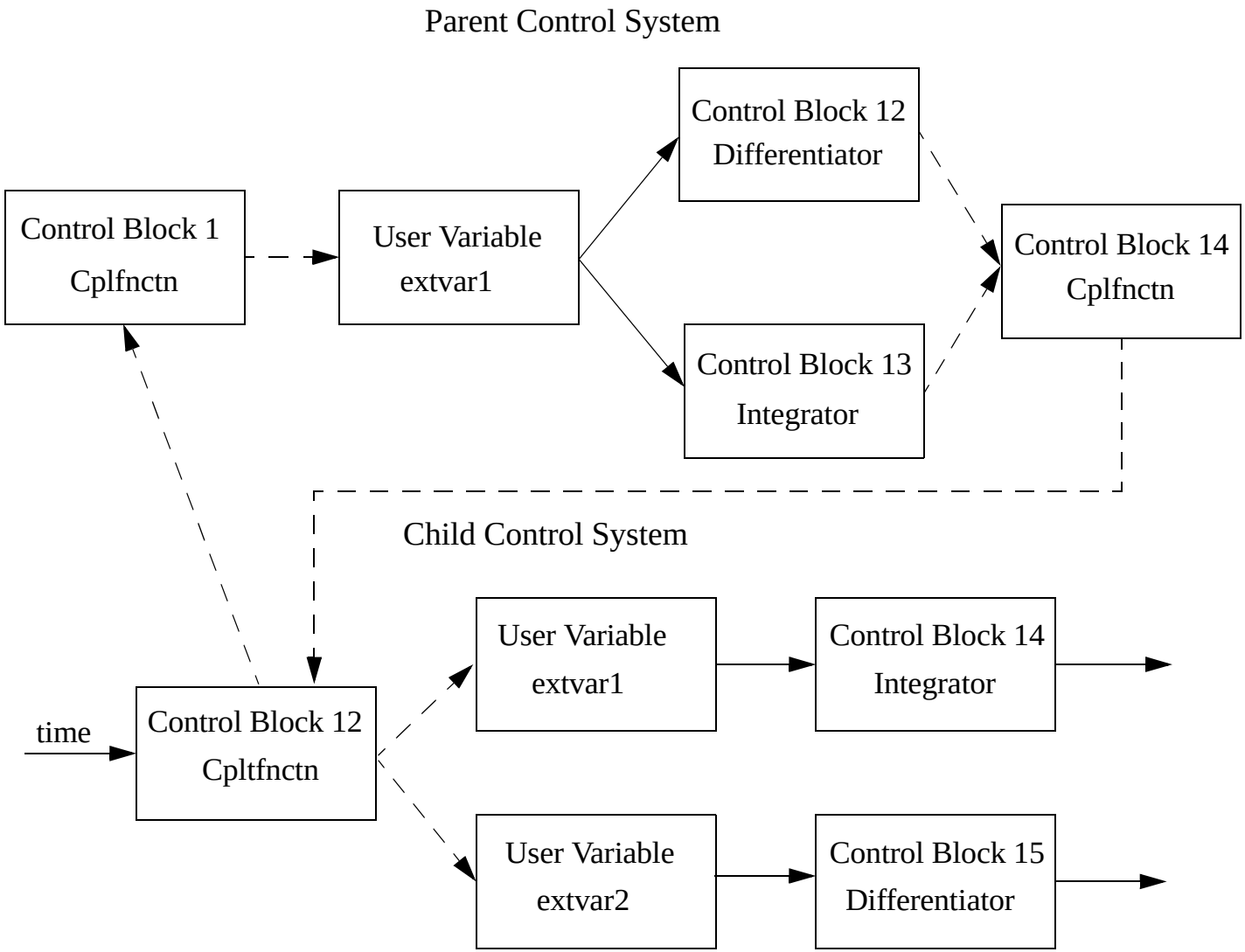

Figure 26 Schematic of coupled control systems test case

```
# pvm synchronous explicit test case pvmcsx for control system coupling
virtual
        MACHINE wd=WHERE ep=WHERE
#           wait 10.0
processes
    MACHINE
      parent synchronous relap5.x -i pvmcsp.i -o pvmcsp.p
      child synchronous relap5.x -i pvmcsc.i -o pvmcsc.p
messages
        explicit
                parent sends child p 103010000 uf 103010000 ug 103010000
                child receives parent p 5010000 uf 5010000 ug 5010000
                parent sends child voidg 103010000
                child receives parent voidg 5010000
                parent sends child velfj 104000000 velgj 104000000
                child receives parent velfj 4000000 velgj 4000000
                parent sends child  mflowgj 104000000 mflowfj 104000000
                child receives parent mflowgj 4000000 mflowfj 4000000
                child sends parent p 3100000 uf 3100000 ug 3100000
                parent receives child p 105010000 uf 105010000 ug 105010000
                child sends parent voidg 3100000
                parent receives child voidg 105010000
        control
                child sends parent extfnctn 12 time 0
                parent receives child extfnctn 1 extvar1 1000000000
                parent sends child extfnctn 14 cntrlvar 12 cntrlvar 13
                child receives parent extfnctn 12 extvar1 1000000000 extvar2 1000000000
timesteps
 0.050    0.0000001  0.0001  7   10  50  100  1
```

Figure 27 Listing of template file for coupled control system test case

Appendix C
PVMEXEC© Input Data Requirements

Appendix C
PVMEXEC© Input Data Requirements

1 Introduction

The input to the executive program is divided into five sections. These sections are delimited by reserved keywords. The keyword stands alone on an input card and indicates that the following cards contain data appropriate for that section of the input deck. A section of the input deck begins with a keyword and ends with another keyword or at the end of the input deck. In addition to the keywords that denote the different sections of the input deck, other keywords serve to identify the data on individual input cards. The keywords are arranged in a hierarchy where certain keywords can only appear after other keywords. The reserved keywords are

- virtual
  - wait
  - write
- simulation
  - name
  - start time
  - restart time
- processes
  - synchronous
  - asynchronous
  - uses
  - writes
- messages
  - explicit
    - preceeds
    - awaits

- semi-implicit
    - awaits
- kinetics
    - awaits
    - power
    - zone
    - heatstr
    - table
    - cntrlvar

• control
- awaits

• timesteps

and are written in lower case.

In addition to these reserved keywords, there are user defined keywords that are used in subsequent sections of the input decks after being defined at the beginning of the input deck. Because the sections of the input decks are delimited by keywords, they can appear in any order in the deck but are processed by the input processor in a specified order. The layout of the five sections of the input deck is described in the order in which they are processed. Comment lines may appear anywhere in the input deck. Comment lines contain the sharp character (#) as the first nonblank character on the line and comment lines can appear anywhere in the input deck. Blank lines are not allowed in the input deck and unusual characters such as a tab are not allowed as well.

2 Virtual Section of Input Deck

The first section of the input deck is optional. This section, if present, begins with the keyword ‘virtual’. There are two types of input records in this section.The first type of input record in this section specifies the data for the computational nodes in the virtual machine. The data consist of the name of the computational node followed by a variable number of PVM configuration parameters that are sent to the computational node when it is added to the virtual machine. The names of the computational nodes in the virtual machine become user defined keywords. If these input records are omitted, all processes are executed on the processor where the executive program is executed using defaults values of all PVM

configuration parameters. The second type of record in this section specifies the global wait time for communication between the processes. If this record is omitted, the default wait time is infinite.

The format of the first type of records in this section of the input deck is:

W1(A) Name of computational node.

W2(A) First PVM configuration parameter.

W3(A) Second PVM configuration parameter.

.....

See the PVM documentation for the description of the available PVM configuration parameters.

The format of the second type of record for this section of the input decks is:

W1(A) Keyword ‘wait’

W2(R) Global wait time (s). This is the amount of time to wait while listening to receive a message from another code or to wait to receive the acknowledgement to a message that has been sent to another coupled code. A value of -1.0 indicates an infinite wait time. This option should be used carefully because a deadlock might result if there is an error in the coupled computation.

W3(I) Debug flag. A value of 1 indicates that each coupled task will be started up in a debugger window. The debugger to be used depends upon the architecture being used to execute the virtual machine and the compiler used to compile the child processes. This input is intended for code development and should not be used for production runs. In addition, the global wait time specified by the previous word on this card should be set to -1.0 (infinite wait time) so that the coupled tasks do not ‘time out’ while the user is examining the state of the coupled codes in the debugger.

The format of the third and last type of record for the ‘virtual’ section of the input deck is:

W1(A) Keyword ‘write’

W2(A) Filename. The information normally written to the ‘standard output’ file for the PVMEXEC program and all child processes will be written to this file instead of the default file named pvml.<uid> located on the /tmp directory or on the directory specified in the PVM_TMP environmental directory. The <uid> is the user identification number of the user executing the coupled simulation.

The data in the first section of the input deck are used to generate a PVM host file for starting the virtual machine.

3 Processes Section of Input Deck

The second section of the input deck is required and specifies the simulation codes that are to be executed using the virtual machine along with where they are to be executed. This section of the input deck is delimited by the keyword ‘processes’. This keyword is followed by subsections which are delimited by the names of the computational nodes in the virtual machine that were specified in the ‘virtual’ section of the input deck. Each of these subsections contains a variable number of input records describing the simulation codes to be executed on that computational node.

An input record consists of a user name for the process, the keyword ‘synchronous’ or ‘asynchronous’, and the name of an executable file followed by any command line parameters needed by the executable. The keyword ‘synchronous’ denotes that the time step to be used by the code is controlled by the executive program. The keyword ‘asynchronous’ denotes that the code may select its own time step size subject to the restriction that it must exchange data with other processes at fixed, executive program specified times. Synchronous time step control is required for semi-implicit, control system, and kinetics coupling. Synchronous or asynchronous time step control may be used for explicit coupling. In addition, the executive program controls printing, plotting and restart information generation for synchronous processes while it only controls restart information generation for asynchronous processes. For RELAP5-3D©, the parameters would be things like the name of the input file, the name of the output file, etc. The format of this record is:

W1(A) User name for process.

W2(A) Keyword ‘synchronous’ or ‘asynchronous’.

W3(A) Name of executable file.

W4(A) First command line parameter.

W5(A) Second command line parameter.

A second input record may be included for each named process. This record begins with the user name of the process followed by the keyword ‘uses’, which in turn is followed by an integer that specifies the number of threads of execution to use for the process. Any words after the third word are ignored. This record is used for multi-threaded executables. The format of this second type of record is:

W1(A) User name of process.

W2(A) Keyword ‘uses’.

W3(I) Number of threads to be used by this process.

W4(A) Keyword ‘threads’. This word is optional.

A third input record may also be included for each named process. This record contains a filename and the information normally written to the ‘standard output’ file by this process will be written to this file instead. The format of this record is:

W1(A) User name of process.

W2(A) Keyword ‘writes’.

W3(A) Filename. The information normally written to the ‘standard output’ file by the process names in this input record will be written to this file instead of the default file named pvml.<uid> located on the /tmp directory or on the directory specified in the PVM_TMP environmental directory. The <uid> is the identification number of the user executing the coupled simulation.

4 Simulation Section of Input Deck

The third section of the input deck is optional and provides information about the simulation being executed. This section of the input deck begins with the keyword ‘simulation’. There can be up to three optional input data records in this section. The first input data record begins with the keyword ‘name’, followed by a string value that describes the simulation being executed.

W1(A) Keyword ‘name’.

W2(A) String containing description of simulation.

The second input data record begins with the keyword ‘restart’ followed by the word ‘time’ followed by a decimal number. The decimal number is the time from which to restart the coupled computation. A value of -1.0 indicates that the restart is to begin from the last restart record from a previous run. If this input record is absent from the input deck, a new problem is assumed.

W1(A) Keyword ‘restart’.

W2(A) Keyword ‘time’.

W3(R) Time from which to restart the previous simulation (s).

The third optional input data record begins with the keyword ‘start’, followed by the word ‘time’ followed by a real number. If this input record in absent from the input deck, a start time of zero is assumed for a new run and the start time is obtained from the restart record for a restart run. If the problem type is

new and this input record is input, the start time is set to the value in this input record. If the problem type is restart, then the only valid value for the start time is zero. This is used to reset the simulation time when switching from a steady state run to a transient run on a restart.

W1(A) Keyword ‘start’.

W2(A) Keyword ‘time’.

W3(R) Start time of simulation run (s).

If this entire section is omitted from the input deck, a new run starting from time zero is assumed and the name of the simulation is blank.

5 Message Section of Input Deck

The fourth section of the input deck is required and describes the messages that are to be sent between the individual processes. The section begins with the keyword ‘messages’. The data are divided into subsections denoted by the keywords ‘explicit’, ‘semi-implicit’, ‘kinetics’ and ‘control’. The individual input records in each subsection begin with the user name of a process, the keyword ‘sends’ or ‘receives’, and the user name of the process receiving or sending the data as appropriate given the keyword in the second position in the input record. These data are followed by pairs of identifiers which specify what data to send (or receive). The data identifier consists of a component/variable name and a volume/junction number or component number as appropriate. The component name is used with semi-implicit hydraulic coupling and kinetics coupling, and the variable name is used for explicit hydraulic coupling and control system coupling. The format of this input record is:

W1(A) Computational process name.

W2(A) Keyword. Enter ‘sends’ or ‘receives’.

W3(A) Computational process name.

W4(A) Name of first component/variable/keyword.

W5(I) Component or volume/junction number.

.....

Input cards for explicit hydraulic coupling messages may specify either a component name or a variable name while input cards for semi-implicit hydraulic coupling messages should only specify component names. Any type of volume or junction component may be the source of data being sent to another process. Components receiving data from a coupled process should be boundary component types like time dependent volumes or time dependent junctions whose conditions are determined at the

beginning of a time step advancement and would normally remain unchanged during the time step. The conditions in the coupling time dependent volumes and time dependent junctions for semi-implicit hydraulic coupling change during a time step advancement as a result of the semi-implicit coupling methodology while conditions in boundary coupling components for explicit hydraulic coupling remain unchanged during the time step advancement.

Input cards for kinetics messages may contain reserved keywords depending on whether the message is sending data to a coupled process or receiving data from a coupled process. Kinetics messages sending data to a coupled process may name volumes using the component name or heat structures using the keyword ‘heatstr’. These components must be present in the input deck for the process sending the message. The keyword ‘power’ is used to specify the reactor power from the point kinetics model and the keyword ‘zone’ is used to specify the power in a zone from the multi-dimensional kinetics model. The parameter for the keyword ‘power’ is 0 (zero). The keywords ‘table’ or ‘cntrlvar’ can be used to send the output from the table or control variable specified. Kinetics messages specifying data to be received by a process use the keywords ‘volume’ and ‘heatstr’ to specify that volume data and heat structure data are being received. The parameter for volume data must be less than 1000000 and the parameter for heat structure data must be less than 10000. The volumes and heat structures specified in kinetics receive messages must only be referenced by the point or multi-dimensional kinetics models.

Power data are received by specifying the keyword ‘power’ or ‘zone’. If ‘table’ or ‘cntrlvar’ values are being sent, the corresponding receive should be specified as ‘power’ (‘zone’ could also be used but is not recommended). The parameter for ‘power’ is 0 (zero). The data specified by the keywords ‘power’ and ‘zone’ should only be referenced by the heat structure source cards, Cards 1CCCG701 through 1CCCG799 for heat structures contained in the input deck of the process receiving the data.

Input cards for control system coupling specifying data to be sent by a process to another process may specify any data item that can be used as an input value to a control variable (See Section 3.1 of Appendix A of Volume II of the RELAP5-3D© manual). The corresponding data specifier in the receiving process must be an external function control block or an interactive variable.

In addition to the required input records specifying the contents of the messages, optional asymmetrical wait times may be specified for the communication between each pair of processes for each category of communication (i.e., explicit, semi-implicit, kinetics, and/or control). These wait times are specified by inserting the following input record in the appropriate subsection of the ‘messages’ section of the input deck. The format of the wait time input record is:

W1(A) Name of process awaiting message.

W2(A) Keyword ‘awaits’

W(A) Name of process to wait upon.

W(R) Wait time (s).

The wait time is set on a message by message basis and is used as the wait time for the acknowledgement if the message is a send message and is the wait time if the message is a receive message. The global wait time is used if the wait time input record is not input for a given pair of processes. The global wait time is used for communication between the executive process and the other processes in the virtual machine.

The last type of input card in the ‘messages’ section can only appear in the explicit subsection of the messages section of the input file. This card is optional and controls what type of explicit hydraulic coupling is used between the processes named on the card. By default, parallel explicit hydraulic coupling is used between processes not named on this type of input card. If this card is present, the explicit coupling between the two processes named on the card is sequential explicit hydraulic coupling and the card defines the leader and follower processes for the sequential explicit hydraulic coupling. The format of the input record is:

W1(A) Name of leader process in sequential explicit hydraulic coupling.

W2(A) Keyword ‘preceeds’.

W3(A) Name of follower process in sequential explicit hydraulic coupling.

6 Time Step Information

The last section of the input file contains the time step information for the coupled computation. This section is delimited by the keyword ‘timesteps’. The data in this section of the input deck describe a series of one or more time intervals with the maximum and minimum time step sizes for the interval along with the number of maximum time steps between plot records, print records, restart records, and explicit asynchronous coupling. A negative entry for any of the edit frequencies (W4, W5, W6, and W7) will cause the corresponding item not to be executed during that time interval. The end times on these input records must be in ascending order.

W1(R) Time interval end time (s).

W2(R) Minimum time step size (s).

W3(R) Maximum time step size (s).

W4(I) Control option. This word has the packed format dtt. It is not necessary to input leading zeros.

The digit d, which represents a number from 0 through 7, can be used to obtain extra output at every hydrodynamic time step. The number is treated as a three-bit binary number. If no bits are set (i.e., the number is 0), the standard output at the requested frequency using the maximum time step is obtained (see words 5 and 6 of this card). If the number is nonzero, output is obtained at each successful time step, and the bits indicate

which output is obtained. If the first bit from the right is set (i.e., d = 1 if the other bits are not set), major edits are obtained every successful time step. If the second bit from the right is set (i.e., d = 2 if the other bits are not set), minor edits are obtained every successful time step. If the third bit from the right is set (i.e., d = 4 if the other bits are not set), plot records are written every successful time step. These options should be used carefully, since considerable output can be generated.

The digits ss, which can represent a number from 0 to 99, can be used to modify the solution controls for semi-implicitly coupled processes. The only values permitted at this time are 0 and 1. A value of 1 indicates that the mass error time step control in RELAP5-3D© is to be disabled for semi-implicitly coupling and a value of 0 means that the individual coupled processes use the time step and/or solution controls indicated on their input cards. The value of this word can be used to override parts of the solution controls for semi-implicitly coupled codes and the response of each code is code specific. RELAP5-3D© responds by ignoring the mass error time step control as indicated earlier.

W5(I) Minor edit and plot frequency (-). This is the number of maximum (requested) time advances per minor edit to the printed output and write of plot information to the plot file.

W6(I) Major edit frequency (-). This is the number of maximum (requested) time advances per major edit to the printed output.

W7(I) Restart frequency (-). This is the number of maximum (requested) time-advances per write of restart information to the restart file.

W8(I) Explicit asynchronous coupling frequency (-). This is the number of maximum (requested) time advances per exchange of data between explicitly coupled codes.

Appendix D
Example of a Diagnostic Edit

Appendix D
Example of a Diagnostic Edit

This appendix contains an example (**Figure 1**) of a diagnostic edit for one time step using the semi-implicit scheme for the case when HELP = 3. As can be seen from the figure, this edit can be quite lengthy. As Section 2 of Volume I of this manual indicates, there are many subroutines called from the main hydrodynamic subroutine HYDRO and the main heat transfer/conduction subroutine HTADV. The diagnostic edit prints out information for most of the subroutines called by these two subroutines In addition, the particular ones printed will vary, depending on whether the time step is repeated, if bad donoring occurs, if the choking model is turned on, whether heat structures are present or not, whether the heat time advancement is different from the hydrodynamic time advancement, etc. For the example presented here, the time step is not a repeated time step, a heat transfer calculation occurs, and a choking diagnostic edit occurs. In order to save space in the appendix, only the first 3 heat structures, the first 3 volumes, and the first 2 junctions are shown.

Each subroutine section of the edit (except heat transfer) begins with a line of pound signs (###...). The next line lists the name of the subroutine, the label DIAGNOSTIC PRINTOUT, the simulated time (TIMEHY), the time step size (DT), the total attempted advancements (NCOUNT), and the value of the variables HELP, SUCCES, and FAIL. HELP is explained in Section 8 of this manual. SUCCES is a code variable that indicates if a time step is successful (SUCCES = 0 means successful, SUCCES = 1 or 2 means unsuccessful). FAIL is a code variable that is normally false (F) until the code fails, and then it becomes true (T). The printing of most of these blocks can be controlled by the user through input cards 4 or 5 (See Section 2.2 of Appendix A of this volume) to reduce the size of the diagnostic edits.

The order of the subroutines in the diagnostic edit printed in **Figure 1** is as follows:

Heat transfer subroutines (HTRC1 plus appropriate correlation subroutines.)

VOLVEL

PHANTV

PHANTJ

FWDRAG

VEXPLT

JCHOKE

JPROP

PRESEQ

SYSSOL

JPROP

VFINL

EQFINL

STATE

MASS ERR

JPROP

VLVELA

MS ERR T

The particular quantities printed out in each subroutine will not be presented here. Most of the tables are grouped by volumes and junctions, and they usually begin with either the volume number (VOLNO) or the junction number (JUNNO). The definition of many of these volume and junction terms are listed in the comment common blocks VOLDATC and JUNDATC in RELAP5-3D©. A copy of these blocks is contained in **Figure 2** and **Figure 3** as an aid to understanding this diagnostic edit. Many of the other quantities printed out are calculated only within that particular subroutine, and they are printed because it was felt they were important in debugging that subroutine.

```
o  htrc1 initial :   id =     30001   volno =   3010000   irwt =  0
     tw            htdiam        htsa        p             tsatt         satt          voidg         g             v
     5.016510E+02  7.620002E-02  4.902718E-02  6.405464E+05  4.345595E+02  4.345595E+02  9.451944E-01  2.404556E+01  9.339683E-04
     tempf         tempg
     4.356360E+02  4.341691E+02
 In chfcal
  CHF debug printout, ncount, volno, time         509    3010000 5.00000E-01
  Passed in and calculated quantities, both aqueous and nonaqueous
  p, pm, g, ga, gabs, gab, rf/rg, rfa, rfna
  6.40546E+05 6.40546E-01 2.40456E+01 2.40456E+01 2.40456E+01 2.40456E+01 0.00000E+00 0.00000E+00 0.00000E+00
  rga, rgna, hfga, hfgp, siga, sigma, x, diamv, aqua
  0.00000E+00 0.00000E+00 2.07619E+06 2.07619E+06 4.62893E-02 4.62893E-02 2.27550E-01 7.62000E-02 1.00000E+00
          p,g,x,ip,ig,ix= 0.640546E+06 0.240456E+02 0.227550E+00    6    3   13
               k1,k2,k3,k4,k5,k6,k7,k8=  0.79000      1.0000      1.0000      1.2009      1.0000     0.00000E+00  1.0000      1.0000
    chf =  0.000000E+00     chfmul=  0.000    hfgp,rhf,rhg,sigma,aqua =  0.207619E+07  904.809      3.37673     0.462893E-01  1.00000
     prednb - thconf        viscf         csubpf        sigma         tw-tsatt      rhof          rhog          hfgp
              6.823210E-01  1.674918E-04  4.344334E+03  4.628926E-02  6.709156E+01  9.048091E+02  3.376729E+00  2.076186E+06
     dittus - tf            thcons        viscs         cps
              4.356360E+02  6.823210E-01  1.674918E-04  4.344334E+03
              htcoef        qfluxo        mode     hlam          hnat          hturb
              7.595107E+02  5.013909E+04     2  3.904093E+01  7.595107E+02  2.920891E+02
    prednb    hmac          f             hmic          sf            htcoef        qfluxo        chf
              5.414682E+03  7.129171E+00  8.293794E+04  3.813658E-01  8.835262E+04  5.921886E+06  0.000000E+00
     pstdnb - thcons        viscs         csubpg        rhof          rhog          sigma
              3.372731E-02  1.575588E-05  2.414047E+03  9.048091E+02  3.376729E+00  4.628926E-02
     dittus - tf            thcons        viscs         cps
              4.345595E+02  3.372731E-02  1.575588E-05  2.414047E+03
              htcoef        qfluxo        mode     hlam          hnat          hturb
              3.750358E+01  2.516174E+03     9  1.929804E+00  9.340970E+00  3.750358E+01
     pstdnb -htbf          htbg          qtfbf         qtfbg         hfb           hv            qfbf          qfbg
              0.000000E+00  3.580729E+01  0.000000E+00  2.402367E+03  5.111356E+00  3.750358E+01  3.429289E+02  2.516174E+03
              htcoef        qfluxo          qfb           qtb
              4.261493E+01  2.859102E+03  2.859102E+03  2.402367E+03
   suboil final output :
     gamw        gammul          qffo        peclet         numod         enmin        encrit       sathfp
  8.670467E-03  2.528357E-05  3.429289E+02  1.166607E+04  3.829750E+01  6.817137E+05  6.813481E+05  6.817137E+05
   htrc1 final output :
     mode     chf           htcoef        htcf          htcg          qfluxo        qffo          qfgo
        8     0.000000E+00  4.261493E+01  5.111356E+00  3.750358E+01  2.859102E+03  3.429289E+02  2.516174E+03
              gamw          fstrt          quala          quale          dtsat          sathfp
              8.670467E-03  1.000000E+00  0.000000E+00  2.275499E-01  6.709156E+01  6.817137E+05
o  htrc1 initial :   id =     30002   volno =   3020000   irwt =  0
     tw            htdiam        htsa        p             tsatt         satt          voidg         g             v
     5.011370E+02  7.620002E-02  4.902718E-02  6.404966E+05  4.345564E+02  4.345564E+02  9.317909E-01  7.940285E+01  9.339683E-04
     tempf         tempg
     4.354654E+02  4.342100E+02
 In chfcal
  CHF debug printout, ncount, volno, time         509    3020000 5.00000E-01
  Passed in and calculated quantities, both aqueous and nonaqueous
  p, pm, g, ga, gabs, gab, rf/rg, rfa, rfna
  6.40497E+05 6.40497E-01 7.94029E+01 7.94029E+01 7.94029E+01 7.94029E+01 0.00000E+00 0.00000E+00 0.00000E+00
  rga, rgna, hfga, hfgp, siga, sigma, x, diamv, aqua
  0.00000E+00 0.00000E+00 2.07620E+06 2.07620E+06 4.62899E-02 4.62899E-02 2.18124E-01 7.62000E-02 1.00000E+00
          p,g,x,ip,ig,ix= 0.640497E+06 0.794029E+02 0.218124E+00    6    4   13
               k1,k2,k3,k4,k5,k6,k7,k8=  0.79000      1.0000      1.0000      1.2006      1.0000     0.00000E+00  1.0000      1.0000
```

Figure 1 Diagnostic edit from Edwards pipe problem with extras.

```
    chf =  0.000000E+00     chfmul=  0.000    hfgp,rhf,rhg,sigma,aqua =  0.207620E+07  904.978      3.37604     0.462899E-01  1.00000
     prednb - thconf        viscf         csubpf        sigma         tw-tsatt      rhof          rhog          hfgp
              6.823593E-01  1.674952E-04  4.344325E+03  4.628992E-02  6.658064E+01  9.049778E+02  3.376043E+00  2.076196E+06
     dittus - tf            thcons        viscs         cps
              4.354654E+02  6.823593E-01  1.674952E-04  4.344325E+03
              htcoef        qfluxo        mode     hlam          hnat          hturb
              7.685994E+02  5.047516E+04     2  3.904312E+01  7.586511E+02  7.685994E+02
    prednb    hmac          f             hmic          sf            htcoef        qfluxo        chf
              5.257292E+03  6.840094E+00  3.042331E+04  1.414360E-01  3.568060E+04  2.370858E+06  0.000000E+00
     pstdnb - thcons        viscs         csubpg        rhof          rhog          sigma
              3.370634E-02  1.574475E-05  2.414020E+03  9.049778E+02  3.376043E+00  4.628992E-02
     dittus - tf            thcons        viscs         cps
              4.345564E+02  3.370634E-02  1.574475E-05  2.414020E+03
              htcoef        qfluxo        mode     hlam          hnat          hturb
              9.367075E+01  6.236659E+03     9  1.928604E+00  9.322819E+00  9.367075E+01
     pstdnb -htbf          htbg          qtfbf         qtfbg         hfb           hv            qfbf          qfbg
              0.000000E+00  8.553882E+01  0.000000E+00  5.695230E+03  7.895455E+00  9.367075E+01  5.256845E+02  6.236659E+03
              htcoef        qfluxo          qfb           qtb
              1.015662E+02  6.762343E+03  6.762343E+03  5.695230E+03
   suboil final output :
     gamw        gammul          qffo        peclet         numod         enmin        encrit       sathfp
  1.329112E-02  2.528345E-05  5.256845E+02  3.852126E+04  5.870393E+01  6.817004E+05  6.811399E+05  6.817004E+05
   htrc1 final output :
     mode     chf           htcoef        htcf          htcg          qfluxo        qffo          qfgo
        8     0.000000E+00  1.015662E+02  7.895455E+00  9.367075E+01  6.762343E+03  5.256845E+02  6.236659E+03
              gamw          fstrt          quala          quale          dtsat          sathfp
              1.329112E-02  1.000000E+00  0.000000E+00  2.181238E-01  6.658064E+01  6.817004E+05
o  htrc1 initial :   id =     30003   volno =   3030000   irwt =  0
     tw            htdiam        htsa        p             tsatt         satt          voidg         g             v
     4.859351E+02  7.620002E-02  4.902718E-02  6.403597E+05  4.345479E+02  4.345479E+02  9.312849E-01  1.414440E+02  9.339683E-04
     tempf         tempg
     4.351487E+02  4.342624E+02
 In chfcal
  CHF debug printout, ncount, volno, time         509    3030000 5.00000E-01
  Passed in and calculated quantities, both aqueous and nonaqueous
  p, pm, g, ga, gabs, gab, rf/rg, rfa, rfna
  6.40360E+05 6.40360E-01 1.41444E+02 1.41444E+02 1.41444E+02 1.41444E+02 0.00000E+00 0.00000E+00 0.00000E+00
  rga, rgna, hfga, hfgp, siga, sigma, x, diamv, aqua
  0.00000E+00 0.00000E+00 2.07622E+06 2.07622E+06 4.62917E-02 4.62917E-02 2.12822E-01 7.62000E-02 1.00000E+00
          p,g,x,ip,ig,ix= 0.640360E+06 0.141444E+03 0.212822E+00    6    5   13
                k1,k2,k3,k4,k5,k6,k7,k8=  0.79000      1.0000      1.0000      1.2004      1.0000      0.18943      1.0000      1.0000
    chf =   404743.         chfmul=  0.180    hfgp,rhf,rhg,sigma,aqua =  0.207622E+07  905.291      3.37476     0.462917E-01  1.00000
     prednb - thconf        viscf         csubpf        sigma         tw-tsatt      rhof          rhog          hfgp
              6.824303E-01  1.675045E-04  4.344300E+03  4.629173E-02  5.138721E+01  9.052910E+02  3.374755E+00  2.076224E+06
     dittus - tf            thcons        viscs         cps
              4.351487E+02  6.824303E-01  1.675045E-04  4.344300E+03
              htcoef        qfluxo        mode     hlam          hnat          hturb
              1.226662E+03  6.229773E+04     2  3.904718E+01  7.116532E+02  1.226662E+03
    prednb    hmac          f             hmic          sf            htcoef        qfluxo        chf
              8.224450E+03  6.704742E+00  1.422551E+04  9.506101E-02  2.244996E+04  1.148699E+06  4.047429E+05
     pstdnb - thcons        viscs         csubpg        rhof          rhog          sigma
              3.311139E-02  1.541671E-05  2.413948E+03  9.052910E+02  3.374755E+00  4.629173E-02
     dittus - tf            thcons        viscs         cps
              4.345479E+02  3.311139E-02  1.541671E-05  2.413948E+03
              htcoef        qfluxo        mode     hlam          hnat          hturb
```

Figure 1 Diagnostic edit from Edwards pipe problem with extras. (Continued)

```
             1.454092E+02  7.472172E+03     9  1.894562E+00  8.752997E+00  1.454092E+02
     pstdnb -htbf          htbg          qtfbf         qtfbg         hfb           hv            qfbf          qfbg
             1.583266E+03  1.161797E+02  8.135961E+04  5.970149E+03  8.460500E+00  1.454092E+02  4.347615E+02  7.472172E+03
             htcoef        qfluxo          qfb           qtb
             1.699446E+03  8.732976E+04  7.906933E+03  8.732976E+04
   suboil final output :
     gamw        gammul           qffo        peclet         numod         enmin        encrit       sathfp
  2.057025E+00  2.528312E-05  8.135961E+04  6.861217E+04  9.084597E+03  6.816637E+05  5.949248E+05  6.816637E+05
   htrc1 final output :
     mode     chf           htcoef        htcf          htcg          qfluxo        qffo          qfgo
        6     4.047429E+05  1.699446E+03  1.583266E+03  1.161797E+02  8.732976E+04  8.135961E+04  5.970149E+03
              gamw          fstrt          quala          quale          dtsat          sathfp
              2.057025E+00  8.105669E-01  0.000000E+00  2.128222E-01  5.138721E+01  6.816637E+05
0##########################################################################################################################
     volvel Diagnostic printout, timehy =  0.5000000    , dt =  1.0000000E-03, ncount =       509, help =  3, lsuces =  0, fail = F
0Volume inlet and outlet terms
 ========================================================================================================================
        volno(i)            invcnt(l)
        avol(i)     iiflag  loop jx    junno(jx)  ivf ajun(jx)     voidfj(jx)   rhofj(jx)    velfjo*ivf   arat(jx)     cvelf(ivr)
                                                      athrot(jx)   voidgj(jx)   rhogj(jx)    velgjo*ivf   arat(jx+1)   cvelg(ivr)
 ========================================================================================================================
        003010000           1
        4.56037E-03
+                   outlet  1          003010000  1   4.56037E-03  5.48056E-02   904.81       0.74716      1.0000       0.00000E+00
                                                       1.0000       0.94519       3.3767       3.4585       1.0000       0.00000E+00
        003020000           2
        4.56037E-03
+                   inlet   1          003010000  1   4.56037E-03  5.48056E-02   904.81       0.74716      1.0000       0.00000E+00
                                                       1.0000       0.94519       3.3767       3.4585       1.0000       0.00000E+00
                    outlet  2          003020000  1   4.56037E-03  6.82091E-02   904.98       1.4113       1.0000       0.00000E+00
                                                       1.0000       0.93179       3.3760       7.5009       1.0000       0.00000E+00
        003030000           2
        4.56037E-03
+                   inlet   1          003020000  1   4.56037E-03  6.82091E-02   904.98       1.4113       1.0000       0.00000E+00
                                                       1.0000       0.93179       3.3760       7.5009       1.0000       0.00000E+00
                    outlet  2          003030000  1   4.56037E-03  6.87151E-02   905.29       2.1800       1.0000       0.00000E+00
                                                       1.0000       0.93128       3.3748       11.633       1.0000       0.00000E+00
0Volume average terms
 ========================================================================================================================
      volno(i)   sumvfx(ix)   difvfx(ix)   vvfx(ix)     vvfx(ix+1)   vfa(ix)      vfa(ix+1)    vrhof(ix)    vrhof(ix+1)  areav(ix)
                 sumvgx(ix)   difvgx(ix)   vvgx(ix)     vvgx(ix+1)   vga(ix)      vga(ix+1)    vrhog(ix)    vrhog(ix+1)  areav(ix+1)
 ========================================================================================================================
      003010000  0.74716      -0.55825     0.00000E+00  0.74716      0.00000E+00  0.16897      0.00000E+00  0.22614      0.00000E+00
                 3.4585       -11.961      0.00000E+00   3.4585      0.00000E+00  5.03391E-02  0.00000E+00  1.45552E-02  4.56037E-03
      003020000  1.1155       -0.41083     0.74716       1.4113      0.16897      0.39729      0.22614      0.28150      4.56037E-03
                 5.4651       -10.966       3.4585       7.5009      5.03391E-02  0.10761      1.45552E-02  1.43459E-02  4.56037E-03
      003030000  1.7971       -0.69333      1.4113       2.1800      0.39729      0.61843      0.28150      0.28369      4.56037E-03
                 9.5662       -19.757       7.5009       11.633      0.10761      0.16674      1.43459E-02  1.43326E-02  4.56037E-03
0##########################################################################################################################
     phantv Diagnostic printout, timehy =  0.5000000    , dt =  1.0000000E-03, ncount =       509, help =  3, lsuces =  0, fail = F
0Volume mass transfer terms
 ========================================================================================================================
 i     volno(i)   hif(i)       hifo(i)      hifc         hifc1        dtsf         dtsfm        dtsfsp       dtsfsb       xliqh
       vctrl(i)   hig(i)       higo(i)      higc         higc1        dtsg         higsub       dtsgms       dtsgm        xvaph
       nmap       fluxm        avelf        avelfg       rhocpf       hfg          term         term1        rvcrit(ix)   scrach
```

Figure 1 Diagnostic edit from Edwards pipe problem with extras. (Continued)

```
 ==========================================================================================================================
     1 003010000  6.31082E+07  6.33475E+07  4.91436E+07   1.0000      -1.0766       328.10       1.0000      0.00000E+00  6.86391E+05
               0  8.86346E+06  8.90658E+06  6.43145E+06   1.0000      0.39032      4.38413E+05  0.00000E+00   1.0000      2.75790E+06
               2   48.089      0.74716       2.7113      3.93079E+06  2.07619E+06  3.11365E-02   24.794      0.19410      0.21604
     2 003020000  9.27300E+07  9.31524E+07  6.86744E+07   1.0000     -0.90903       269.57       1.0000      0.00000E+00  6.85650E+05
               0  9.26113E+06  9.30843E+06  6.61368E+06   1.0000      0.34639      3.86389E+05  0.00000E+00   1.0000      2.75790E+06
               2   86.047       1.1155       4.3496      3.93152E+06  2.07620E+06  3.91431E-02   30.864      0.33011      0.20411
     3 003030000  1.38855E+08  1.40346E+08  4.73614E+07   1.0000     -0.60080       169.25       1.0000      0.00000E+00  6.84274E+05
               0  1.12352E+07  1.13291E+07  6.08563E+06   1.0000      0.28548      3.15850E+05  0.00000E+00   1.0000      2.75789E+06
               2  0.58148       1.7971       7.7691      3.93286E+06  2.07622E+06  4.07490E-02   31.104      0.59063      0.18786
0Final volume mass transfer terms
 ==========================================================================================================================
 i     volno      tempf        tempg        tempf-satt   tempg-satt   hif          hig          gammaw       qwf          qwg
 ==========================================================================================================================
     1 003010000   435.64       434.17       1.0766     -0.39032      6.31082E+07  8.86346E+06  8.67051E-03   16.813       123.36
                                                                      4.91436E+07  6.43145E+06
     2 003020000   435.47       434.21      0.90903     -0.34639      9.27300E+07  9.26113E+06  1.32914E-02   25.773       305.77
                                                                      6.86744E+07  6.61368E+06
     3 003030000   435.15       434.26      0.60080     -0.28548      1.38855E+08  1.12352E+07   2.0646       4003.5       293.77
                                                                      6.85443E+07  6.47971E+06
0Other volume terms
 ==========================================================================================================================
 i     volno(i)   viscf(i)     thconf(i)    voidf(i)     fwalf(i)     diamv(i)     costhe(ix)   fidxup(ix)   flomap(ix)   fwfxaf(ix)
       imap(i)    viscg(i)     thcong(i)    voidg(i)     fwalg(i)     dstar(ix)    rvcrit(ix)                pfinrg(ix)   fwfxag(ix)
 ==========================================================================================================================
     1 003010000  1.67492E-04  0.68232      5.48056E-02  5.48056E-02  7.62000E-02 -0.79283      0.00000E+00           12  0.20861
        3162114  1.43039E-05  3.14723E-02  0.94519      0.94519       33.300      0.19410                   0.00000E+00  0.79139
     2 003020000  1.67495E-04  0.68236      6.82091E-02  6.82091E-02  7.62000E-02 -0.75943      0.00000E+00           12  0.22548
        3162114  1.43038E-05  3.14719E-02  0.93179      0.93179       33.303      0.33011                   0.00000E+00  0.77452
     3 003030000  1.67505E-04  0.68243      6.87151E-02  6.87151E-02  7.62000E-02 -0.75821      0.00000E+00           12  0.27787
        3162114  1.43035E-05  3.14708E-02  0.93128      0.93128       33.308      0.59063                   0.00000E+00  0.72213
0##########################################################################################################################
     phantj Diagnostic printout, timehy =  0.5000000    , dt =  1.0000000E-03, ncount =       509, help =  3, lsuces =  0, fail = F
0junction drag terms
 ==========================================================================================================================
       junno(i)   fij(i)       c0j(i)       fxj(i)       sinbt(ix)    diamj(i)     faaj(i)      ireg(ix)     voidj(i)     avkx(ix)
       jc(i)      fijo(i)      c0jo(i)      fxjo(i)      vgjj(i)      athrot(i)    jcex(i)      dpstf(ix)    flompj(ix)   avlx(ix)
 ==========================================================================================================================
       003010000  9.90460E-02  1.0000       0.00000E+00  0.00000E+00  7.62000E-02  0.58698                0  0.94519       1.0000
           65536  9.97859E-02  1.0000       0.00000E+00  0.00000E+00   1.0000           1052768 -0.21658           12  1.0000
       003020000  8.99069E-02  1.0000       0.00000E+00  0.00000E+00  7.62000E-02  0.60980                0  0.93179       1.0000
           65536  9.09186E-02  1.0000       0.00000E+00  0.00000E+00   1.0000           1052768 -8.79932E-03           12  1.0000
0##########################################################################################################################
     fwdrag Diagnostic printout, timehy =  0.5000000    , dt =  1.0000000E-03, ncount =       509, help =  3, lsuces =  0, fail = F
0Volume terms
 ==================================================================================================
       volno(i)   vctrl(i)                voidf(i)     rhof(i)      viscf(i)     diamv(i)     fwalf(i)
                  imap(i)                 voidg(i)     rhog(i)      viscg(i)     roughv(i)    fwalg(i)
                                          fshape(i)    frica(i)     fricb(i)     fricc(i)
 ==================================================================================================
       003010000                       0  5.48056E-02   904.81      1.67492E-04  7.62000E-02   2.6663
                                 3162114  0.94519       3.3767      1.43039E-05  1.54581E-05  0.17785
                                           1.0000      0.00000E+00  0.00000E+00  0.00000E+00
       003020000                       0  6.82091E-02   904.98      1.67495E-04  7.62000E-02   3.8532
                                 3162114  0.93179       3.3760      1.43038E-05  1.54581E-05  0.24982
```

Figure 1 Diagnostic edit from Edwards pipe problem with extras. (Continued)

```
                                        1.0000      0.00000E+00  0.00000E+00  0.00000E+00
      003030000                      0  6.87151E-02   905.29      1.67505E-04  7.62000E-02   7.2527
                               3162114  0.93128       3.3748      1.43035E-05  1.54581E-05  0.36063
                                        1.0000      0.00000E+00  0.00000E+00  0.00000E+00
0scratch terms, friction factor loop
 ==========================================================================================================================
   nd   volno(i)     sumvfx(l)    fwfaf1(l)    reynf1(l)    fwf1(l)      fwfxaf(l)    reynf2(l)    fwf2(l)      pfinrg(l)
                     sumvgx(l)    fwfag1(l)    reyng1(l)    fwg1(l)      fwfxag(l)    reyng2(l)    fwg2(l)
                     frlmf1(l)    frtrf1(l)    frtbf1(l)    frlmf2(l)    frtrf2(l)    frtbf2(l)
                     frlmg1(l)    frtrg1(l)    frtbg1(l)    frlmg2(l)    frtrg2(l)    frtbg2(l)
 ==========================================================================================================================
    0    003010000   0.74716      5.48056E-02  0.00000E+00  0.00000E+00  0.20861       80803.      2.94681E-03  0.00000E+00
                      3.4585      0.94519      0.00000E+00  0.00000E+00  0.79139       74304.      5.26698E-02
                     0.00000E+00  0.00000E+00  0.00000E+00  0.00000E+00   1.0000      1.89062E-02
                     0.00000E+00  0.00000E+00  0.00000E+00  0.00000E+00   1.0000      1.92434E-02
    0    003020000    1.1155      6.82091E-02  0.00000E+00  0.00000E+00  0.22548      1.38926E+05  4.25777E-03  0.00000E+00
                      5.4651      0.93179      0.00000E+00  0.00000E+00  0.77452      1.18247E+05  7.39987E-02
                     0.00000E+00  0.00000E+00  0.00000E+00  0.00000E+00   1.0000      1.69286E-02
                     0.00000E+00  0.00000E+00  0.00000E+00  0.00000E+00   1.0000      1.74822E-02
    0    003030000    1.7971      6.87151E-02  0.00000E+00  0.00000E+00  0.27787      1.83026E+05  8.01149E-03  0.00000E+00
                      9.5662      0.93128      0.00000E+00  0.00000E+00  0.72213      2.21799E+05  0.10686
                     0.00000E+00  0.00000E+00  0.00000E+00  0.00000E+00   1.0000      1.60433E-02
                     0.00000E+00  0.00000E+00  0.00000E+00  0.00000E+00   1.0000      1.54692E-02
0Wall friction terms, phase apportioning loop
 ==========================================================================================
   volno(i)    fwalf(i)                 reynf1(l)    dpdxfx(l)    zambda(l)    tpdpdx(l)
               fwalg(i)     gfwabs(l)   reyng1(l)    dpdxgx(l)    ctermx(l)    ratdpf(l)
               frlmf1(l)    frtrf1(l)   frtbf1(l)    frlmg1(l)    frtrg1(l)    frtbg1(l)
 ==========================================================================================
   003010000     31.946                   16856.      4.10283E-02  0.28565       4.7608
                 2.1309       48.089      58804.      0.73011       23.052       11.981
                0.00000E+00   1.0000     2.70425E-02  0.00000E+00   1.0000      2.02335E-02
   003020000     52.061                   31325.      0.12210      0.28548       11.661
                 3.3754       86.047      91585.       1.6125       22.372       13.511
                0.00000E+00   1.0000     2.33064E-02  0.00000E+00   1.0000      1.84189E-02
   003030000     83.906                   50857.      0.28835      0.28517       29.063
                 4.1721       141.86     1.60168E+05   4.4094       21.608       11.569
                0.00000E+00   1.0000     2.08865E-02  0.00000E+00   1.0000      1.64623E-02
0Wall friction terms, heated wall effect
 ==========================================================================================
0##########################################################################################################################
     vexplt Diagnostic printout, timehy =  0.5000000    , dt =  1.0000000E-03, ncount =       509, help =  3, lsuces =  0, fail = F
0Sum and difference terms
 ==================================================================================================================
      junno(i)   sumf         sumg         sumold       diff         difg         difold       avrf         avrg
 ==================================================================================================================
      003010000   11.400      0.65675       10.755      0.34342     -0.34344     -0.93043       55.658       3.1687
      003020000   12.697      0.65277       22.742      0.38092     -0.38094      -2.3173       61.967       3.1443
0volume terms
 ==================================================================================================================================
      volno(i)   dl(i)        voidf(i)     rhof(i)      fwalf(i)     velf(i)      difvfx(ix)   sourcf(ix)   sourcm(ix)   gamas(i)
                 hydzc(i)     voidg(i)     rhog(i)      fwalg(i)     velg(i)      difvgx(ix)   sourcg(ix)   sourca(ix)   enths(i)
 ==================================================================================================================================
      003010000  0.20480      5.48056E-02   904.81       31.946      0.74716     -0.55825      -83.415      5.81609E-05  0.00000E+00
                 0.00000E+00  0.94519       3.3767       2.1309       3.4585      -11.961       83.556      0.00000E+00  0.00000E+00
```

Figure 1 Diagnostic edit from Edwards pipe problem with extras. (Continued)

```
      003020000  0.20480      6.82091E-02   904.98       52.061       1.1155     -0.41083      -103.79      7.31168E-05  0.00000E+00
                 0.00000E+00  0.93179       3.3760       3.3754       5.4651      -10.966       104.13      0.00000E+00  0.00000E+00
      003030000  0.20480      6.87151E-02   905.29       83.906       1.7971     -0.69333      -103.95      7.61165E-05  0.00000E+00
                 0.00000E+00  0.93128       3.3748       4.1721       9.5662      -19.757       108.25      0.00000E+00  0.00000E+00
0Junction terms
 ==================================================================================================================================
      junno(i)   fij(i)       ajun(i)      arat(i)      fjunf(i)     formfj(i)    velfjo(i)    velgjo(i)    fifj(ix)     vfdpk(ix)
                 fidxup(ix)   athrot(i)    arat(i+1)    fjunr(i)     formgj(i)    velfj(i)     velgj(i)     figj(ix)     vgdpk(ix)
 ==================================================================================================================================
      003010000  9.90460E-02  4.56037E-03   1.0000      0.00000E+00  0.00000E+00  0.74716       3.4585      1.84127E-02  3.61408E-05
                 0.00000E+00   1.0000       1.0000      0.00000E+00  0.00000E+00  0.74449       3.4536      1.84127E-02  8.95301E-04
      003020000  8.99069E-02  4.56037E-03   1.0000      0.00000E+00  0.00000E+00   1.4113       7.5009      3.75312E-02  3.70220E-05
                 0.00000E+00   1.0000       1.0000      0.00000E+00  0.00000E+00   1.4061       7.4892      3.75312E-02  8.11824E-04
0#################################################################################################################################
     jprop Diagnostic printout, timehy =  0.5000000    , dt =  1.0000000E-03, ncount =       509, help =  3, lsuces =  0, fail = F
0Junction donored properties, ivrev =  1
 ==================================================================================================================================
      junno(i)   velfj(i)     voidfj(i)    rhofj(i)     qualaj(i)    ufj(i)       jc(i)                      volno(k)   voidgo(k)
                 velgj(i)     voidgj(i)    rhogj(i)     voids        ugj(i)       jcex(i)                    volno(l)   voidgo(l)
 ==================================================================================================================================
      003010000  0.74449      5.48056E-02   904.81      0.00000E+00  6.85683E+05                  65536      003010000  0.94519
                  3.4536      0.94519       3.3767       1.0000      2.56726E+06                1052768      003020000  0.93179
      003020000   1.4061      6.82091E-02   904.98      0.00000E+00  6.84942E+05                  65536      003020000  0.93179
                  7.4892      0.93179       3.3760       1.0000      2.56734E+06                1052768      003030000  0.93128
0#################################################################################################################################
    preseq Diagnostic printout, timehy =  0.5000000    , dt =  1.0000000E-03, ncount =       509, help =  3, lsuces =  0, fail = F
0Volume terms
 ==================================================================================================================================
 i    volno      po           ufo          ugo          voidgo       qualao       rhof         rhog         sathf        sathg
                 drfdp        drfduf       drgdp        drgdug       drgdxa       dtfdp        dtfduf       dtgdp        dtgdug
                 dtgdxa       dtdp         dtdug        dtdxa        hif          hig          gammaw       qwf          qwg
 ==================================================================================================================================
     1 003010000 6.40546E+05  6.85683E+05  2.56726E+06  0.94519      0.00000E+00   904.81       3.3767      6.81714E+05  2.75790E+06
                 5.01465E-07 -2.27601E-04  5.24610E-06 -5.37932E-06  0.00000E+00  1.20999E-07  2.30226E-04  3.52149E-05  5.39424E-04
                 0.00000E+00  6.18254E-05  0.00000E+00  0.00000E+00  6.31082E+07  8.86346E+06  8.67051E-03   16.813       123.36
     2 003020000 6.40497E+05  6.84942E+05  2.56734E+06  0.93179      0.00000E+00   904.98       3.3760      6.81700E+05  2.75790E+06
                 5.01690E-07 -2.27682E-04  5.24550E-06 -5.37757E-06  0.00000E+00  1.20950E-07  2.30226E-04  3.52149E-05  5.39430E-04
                 0.00000E+00  6.18292E-05  0.00000E+00  0.00000E+00  9.27300E+07  9.26113E+06  1.32914E-02   25.773       305.77
     3 003030000 6.40360E+05  6.83566E+05  2.56745E+06  0.93128      0.00000E+00   905.29       3.3748      6.81664E+05  2.75789E+06
                 5.02101E-07 -2.27828E-04  5.24469E-06 -5.37466E-06  0.00000E+00  1.20855E-07  2.30228E-04  3.52165E-05  5.39447E-04
                 0.00000E+00  6.18397E-05  0.00000E+00  0.00000E+00  1.38855E+08  1.12352E+07   2.0646       4003.5       293.77
0Junction terms
 ==================================================================================================================================
      junno(i)   ajun(i)      voidfj(i)    rhofj(i)     ufj(i)       velfjo(i)    velgjo(i)          vfdpk(ix)    vfdpl(ix)
                 qualaj(i)    voidgj(i)    rhogj(i)     ugj(i)       velfj(i)     velgj(i)           vgdpk(ix)    vgdpl(ix)
 ==================================================================================================================================
      003010000  4.56037E-03  5.48056E-02   904.81      6.85683E+05  0.74716       3.4585            3.61408E-05  3.61408E-05
                 0.00000E+00  0.94519       3.3767      2.56726E+06  0.74449       3.4536            8.95301E-04  8.95301E-04
      003020000  4.56037E-03  6.82091E-02   904.98      6.84942E+05   1.4113       7.5009            3.70220E-05  3.70220E-05
                 0.00000E+00  0.93179       3.3760      2.56734E+06   1.4061       7.4892            8.11824E-04  8.11824E-04
0Scratch storage volume terms
 ==================================================================================================================================
 i    volno(i)   coefp        sourcf(ix)   sourcm(ix)   a52(ix)      a54(ix)      resoru(ix)   fracal(ix)   fgrw(ix)     fal(ix)
      sourca     sourcp(is)   sourcg(ix)   a51(ix)      a53(ix)      a55(ix)      resorm(ix)   fracag(ix)   a4(ix)       gal(ix)
 ==================================================================================================================================
```

Figure 1 Diagnostic edit from Edwards pipe problem with extras. (Continued)

```
     1 003010000   3.5213      -83.415      5.81609E-05  0.14896     -1.08748E+05  0.00000E+00  0.00000E+00  0.00000E+00  0.00000E+00
        0.00E+00  -5037.1       83.556      0.00000E+00  1.97906E-02 -1.21660E+05  0.00000E+00  0.00000E+00  0.00000E+00  0.00000E+00
     1 003020000   5.3498      -103.79      7.31168E-05  0.13383      -95718.      0.00000E+00  0.00000E+00  0.00000E+00  0.00000E+00
        0.00E+00  -5037.2       104.13      0.00000E+00  2.04082E-02 -1.09098E+05  0.00000E+00  0.00000E+00  0.00000E+00  0.00000E+00
     1 003030000   4.7470      -103.95      7.61165E-05  0.11481      -76670.      0.00000E+00  0.00000E+00  0.00000E+00  0.00000E+00
        0.00E+00  -5037.3       108.25      0.00000E+00  2.41167E-02  -92623.      0.00000E+00  0.00000E+00  0.00000E+00  0.00000E+00
0#################################################################################################################################
     syssol Diagnostic printout, timehy =  0.5000000    , dt =  1.0000000E-03, ncount =       509, help =  3, lsuces =  0, fail = F
0Pressure matrix
 ==============================================================================================================================
 eq.no. volno    el.no.  coefp      el.no.  coefp      el.no.  coefp      el.no.  coefp      el.no.  coefp       dia.dom.term
 ==============================================================================================================================
      1 003010000     1   3.5213         2  -2.5213
+                                                                                                                        1.0000
      2 003020000     1  -2.2958         2   5.3498         3  -2.0540
+                                                                                                                       1.00000
      3 003030000     2  -1.8424         3   4.7470         4  -1.9046
+                                                                                                                       1.00000
      4 003040000     3  -1.7625         4   4.6387         5  -1.8762
+                                                                                                                        1.0000
      5 003050000     4  -1.8671         5   4.8086         6  -1.9415
+                                                                                                                       1.00000
      6 003060000     5  -1.9655         6   5.0072         7  -2.0417
+                                                                                                                        1.0000
      7 003070000     6  -2.0705         7   5.2225         8  -2.1520
+                                                                                                                        1.0000
      8 003080000     7  -2.1856         8   5.4555         9  -2.2699
+                                                                                                                        1.0000
      9 003090000     8  -2.3072         9   5.6968        10  -2.3896
+                                                                                                                       1.00000
     10 003100000     9  -2.4286        10   5.9334        11  -2.5048
+                                                                                                                       1.00000
     11 003110000    10  -2.5434        11   6.1544        12  -2.6110
+                                                                                                                        1.0000
     12 003120000    11  -2.6474        12   6.3530        13  -2.7056
+                                                                                                                       1.00000
     13 003130000    12  -2.7390        13   6.5272        14  -2.7881
+                                                                                                                       1.00000
     14 003140000    13  -2.8182        14   6.6774        15  -2.8592
+                                                                                                                        1.0000
     15 003150000    14  -2.8858        15   6.8057        16  -2.9198
+                                                                                                                        1.0000
     16 003160000    15  -2.9431        16   6.9144        17  -2.9712
+                                                                                                                        1.0000
     17 003170000    16  -2.9912        17   7.0048        18  -3.0136
+                                                                                                                        1.0000
     18 003180000    17  -3.0287        18   7.0786        19  -3.0499
+                                                                                                                        1.0000
     19 003190000    18  -3.0654        19   7.1417        20  -3.0763
+                                                                                                                        1.0000
     20 003200000    19  -3.0709        20   4.1547        21  0.00000E+00
+                                                                                                                        1.0838
     21 005010000    21   1.0000
+                                                                                                                        1.0000
0Solution array
```

Figure 1 Diagnostic edit from Edwards pipe problem with extras. (Continued)

```
 ==========================================================================================================================
       sourcp(i)    sourcp(i+1)  sourcp(i+2)  sourcp(i+3)  sourcp(i+4)  sourcp(i+5)  sourcp(i+6)  sourcp(i+7)  sourcp(i+8)
 ==========================================================================================================================
       -5036.2      -5035.9      -5034.8      -5032.5      -5027.1      -5020.9      -5012.3      -5000.5      -4985.0
       -4965.1      -4940.4      -4910.7      -4875.5      -4834.5      -4787.4      -4733.7      -4672.8      -4604.5
       -4529.4      -4443.0      0.00000E+00
0Singularity parameter (if gerr .lt. 0.0, the matrix solution is singular)
 gerr =  1.00000E-12
0#########################################################################################################################
     jprop Diagnostic printout, timehy =  0.5000000    , dt =  1.0000000E-03, ncount =       509, help =  3, lsuces =  0, fail = F
0Junction donored properties, ivrev =  1
 ==========================================================================================================================
      junno(i)   velfj(i)     voidfj(i)    rhofj(i)     qualaj(i)    ufj(i)       jc(i)                     volno(k)   voidgo(k)
                 velgj(i)     voidgj(i)    rhogj(i)     voids        ugj(i)       jcex(i)                   volno(l)   voidgo(l)
 ==========================================================================================================================
      003010000  0.74448      5.48056E-02   904.81      0.00000E+00  6.85683E+05                 65536       003010000  0.94519
                  3.4533      0.94519       3.3767       1.0000      2.56726E+06               1052768       003020000  0.93179
      003020000   1.4061      6.82091E-02   904.98      0.00000E+00  6.84942E+05                 65536       003020000  0.93179
                  7.4883      0.93179       3.3760       1.0000      2.56734E+06               1052768       003030000  0.93128
0#########################################################################################################################
     vfinl Diagnostic printout, timehy =  0.5000000    , dt =  1.0000000E-03, ncount =       509, help =  3, lsuces =  0, fail = F
0Final junction velocities and flows
 ==========================================================================================================================
      junno(i)   flag         ajun(i)      voidfj(i)    rhofj(i)     velfj(i)           vfdpk(j)     vgdpk(j)       k   p(k)-po(k)
                              mflowj(i)    voidgj(i)    rhogj(i)     velgj(i)           vfdpl(j)     vgdpl(j)       l   p(l)-po(l)
 ==========================================================================================================================
      003010000               4.56037E-03  5.48056E-02   904.81      0.74448            3.61408E-05  8.95301E-04    1   -5036.2
                              0.21862      0.94519       3.3767       3.4533            3.61408E-05  8.95301E-04    2   -5035.9
      003020000               4.56037E-03  6.82091E-02   904.98       1.4061            3.70220E-05  8.11824E-04    2   -5035.9
                              0.50325      0.93179       3.3760       7.4883            3.70220E-05  8.11824E-04    3   -5034.8
0#########################################################################################################################
    eqfinl Diagnostic printout, timehy =  0.5000000    , dt =  1.0000000E-03, ncount =       509, help =  3, lsuces =  0, fail = F
0Common junction data
 ==================================================================================================================
 junno         i  ajun(i)      voidfj(i)    rhofj(i)     velfj(i)     ufj(i)       conmf(i)     cond(i)      conm(i)
                  qualaj(i)    voidgj(i)    rhogj(i)     velgj(i)     ugj(i)       conmg(i)
 ==================================================================================================================
 003010000     1  4.56037E-03  5.48056E-02   904.81      0.74448      6.85683E+05  1.68358E-04 -1.18094E-04  2.18621E-04
                  0.00000E+00  0.94519       3.3767       3.4533      2.56726E+06  5.02632E-05
 003020000     2  4.56037E-03  6.82091E-02   904.98       1.4061      6.84942E+05  3.95821E-04 -2.88394E-04  5.03247E-04
                  0.00000E+00  0.93179       3.3760       7.4883      2.56734E+06  1.07427E-04
0From-to contributions to source terms
 ==================================================================================================================
 junno         i            k  scv2(i)      scv3(i)      scv4(i)                l  scv2(i)      scv5(i)      scv6(i)
 ==================================================================================================================
 003010000     1            1  0.00000E+00   138.57       115.56                2  0.00000E+00   138.57       115.56
 003020000     2            2  0.00000E+00   296.18       271.39                3  0.00000E+00   296.18       271.39
0#########################################################################################################################
    eqfinl Diagnostic printout, timehy =  0.5000000    , dt =  1.0000000E-03, ncount =       509, help =  3, lsuces =  0, fail = F
0Volume data
 ==========================================================================================================================
 volno         i  sourcf(i)    sourcm(i)    sorp(i)      po(i)        ugo(i)       ufo(i)       voidgo(i)    qualao(i)    rhom(i)
                  sourcg(i)    sourca(i)    delxa(i)     p(i)         ug(i)        uf(i)        voidg(i)     quala(i)     dotm(i)
 ==========================================================================================================================
 003010000     1  -198.97      1.76255E-04 -2.18621E-04  6.40546E+05  2.56726E+06  6.85683E+05  0.94519      0.00000E+00   52.546
```

Figure 1 Diagnostic edit from Edwards pipe problem with extras. (Continued)

```
                  -55.018      0.00000E+00  0.00000E+00  6.35510E+05  2.56700E+06  6.84312E+05  0.94545      0.00000E+00   30.998
 003020000     2  -259.63      2.43416E-04 -2.84626E-04  6.40497E+05  2.56734E+06  6.84942E+05  0.93179      0.00000E+00   64.569
                  -53.483      0.00000E+00  0.00000E+00  6.35461E+05  2.56708E+06  6.83576E+05  0.93213      0.00000E+00   39.004
 003030000     3  -253.84      2.37021E-04 -2.78766E-04  6.40360E+05  2.56745E+06  6.83566E+05  0.93128      0.00000E+00   65.052
                  -54.253      0.00000E+00  0.00000E+00  6.35325E+05  2.56719E+06  6.82223E+05  0.93161      0.00000E+00   38.838
0##########################################################################################################################
      state Diagnostic printout, timehy =  0.5000000    , dt =  1.0000000E-03, ncount =       509, help =  3, lsuces =  0, fail = F
0Volume mixture properties
 ==========================================================================================================================
       volno      v            p            voidf        quals        dotm         quala        boron        sounde       rho
                  vo           pps          voidg        quale        dotmo        sigma        borono       dsnddp       satt
 ==========================================================================================================================
       003010000  9.33968E-04  6.35510E+05  5.45534E-02  6.03053E-02   30.998      0.00000E+00  0.00000E+00   79.335       52.546
                  9.33968E-04  6.35510E+05  0.94545      6.25989E-02   31.269      4.63559E-02  0.00000E+00  2.75661E+06   434.25
       003020000  9.33968E-04  6.35461E+05  6.78738E-02  4.83754E-02   39.004      0.00000E+00  0.00000E+00   67.194       64.569
                  9.33968E-04  6.35461E+05  0.93213      5.03408E-02   39.358      4.63566E-02  0.00000E+00  2.75672E+06   434.24
       003030000  9.33968E-04  6.35325E+05  6.83870E-02  4.79717E-02   38.838      0.00000E+00  0.00000E+00   66.100       65.052
                  9.33968E-04  6.35325E+05  0.93161      4.92771E-02   39.178      4.63584E-02  0.00000E+00  2.75685E+06   434.24
0Volume phase properties
 ==========================================================================================================================
       volno      rhof         uf           tempf        sathf        betaff       kapaff       csubpf       viscf        thconf
                  rhog         ug           tempg        sathg        betagg       kapagg       csubpg       viscg        thcong
 ==========================================================================================================================
       003010000   905.12      6.84312E+05   435.32      6.80358E+05  1.09072E-03  6.85176E-10   4343.4      1.67836E-04  0.68239
                   3.3517      2.56700E+06   433.86      2.75755E+06  2.95193E-03  1.67015E-06   2411.4      1.42928E-05  3.14311E-02
       003020000   905.29      6.83576E+05   435.15      6.80345E+05  1.09090E-03  6.85288E-10   4343.4      1.67840E-04  0.68243
                   3.3510      2.56708E+06   433.90      2.75755E+06  2.95154E-03  1.67027E-06   2411.4      1.42927E-05  3.14307E-02
       003030000   905.60      6.82223E+05   434.84      6.80308E+05  1.09121E-03  6.85481E-10   4343.4      1.67849E-04  0.68250
                   3.3497      2.56719E+06   433.95      2.75754E+06  2.95098E-03  1.67062E-06   2411.3      1.42924E-05  3.14296E-02
0Derivatives
 ==========================================================================================================================
       volno      drfdp        drfduf       drgdp        drgdug       drgdxa       dtfdp        dtfduf       dtgdp        dtgdug
                  dtgdxa       dtdp         dtdug        dtdxa
 ==========================================================================================================================
       003010000  5.01022E-07 -2.27333E-04  5.24814E-06 -5.34321E-06  0.00000E+00  1.20687E-07  2.30274E-04  3.53392E-05  5.40052E-04
                  0.00000E+00  6.22143E-05  0.00000E+00  0.00000E+00
       003020000  5.01245E-07 -2.27413E-04  5.24754E-06 -5.34148E-06  0.00000E+00  1.20637E-07  2.30274E-04  3.53391E-05  5.40058E-04
                  0.00000E+00  6.22182E-05  0.00000E+00  0.00000E+00
       003030000  5.01647E-07 -2.27556E-04  5.24675E-06 -5.33861E-06  0.00000E+00  1.20545E-07  2.30276E-04  3.53408E-05  5.40075E-04
                  0.00000E+00  6.22287E-05  0.00000E+00  0.00000E+00
0##########################################################################################################################
   mass err Diagnostic printout, timehy =  0.5000000    , dt =  1.0000000E-03, ncount =       509, help =  3, lsuces =  0, fail = F
0Volume properties
 ==============================================================================================
       volno      v            rho          rhom         drho/rhof    drho/rho     v*drho
 ==============================================================================================
       003010000  9.33968E-04   52.546       52.546      1.02192E-07  1.76028E-06  8.63885E-08
       003020000  9.33968E-04   64.569       64.569      1.11559E-07  1.56411E-06  9.43242E-08
       003030000  9.33968E-04   65.052       65.052      7.06268E-08  9.83209E-07  5.97360E-08
 ----------------------------------------------------------------------------------------------
 System mass error increment for this time step--------------------------------  1.17019E-07
 Mass + flow in - flow out mass error increment--------------------------------- -1.64825E-03
 Mean mass error increment------------------------------------------------------  6.26460E-06
 Rms mass error increment-------------------------------------------------------  1.73157E-03
 Mean mass error fraction-------------------------------------------------------  1.46810E-07
```

Figure 1 Diagnostic edit from Edwards pipe problem with extras. (Continued)

```
 Rms mass error fraction-------------------------------------------------------  8.75055E-07
 Max. system or overall global mass error tolerance-----------------------------  1.75966E-06
 Controlling errmax-------------------------------------------------------------  1.76028E-06
0#######################################################################################################################
      jprop Diagnostic printout, timehy =  0.5000000    , dt =  1.0000000E-03, ncount =       509, help =  3, lsuces =  0, fail = F
0Junction donored properties, ivrev =  0
 ======================================================================================================================
       junno(i)   velfj(i)     voidfj(i)    rhofj(i)     qualaj(i)    ufj(i)       jc(i)                     volno(k)    voidg(k)
                  velgj(i)     voidgj(i)    rhogj(i)     voids        ugj(i)       jcex(i)                   volno(l)    voidg(l)
 ======================================================================================================================
       003010000  0.74448      5.45534E-02   905.12      0.00000E+00  6.84312E+05                 65536       003010000  0.94545
                   3.4533      0.94545       3.3517       1.0000      2.56700E+06               1052768       003020000  0.93213
       003020000   1.4061      6.78738E-02   905.29      0.00000E+00  6.83576E+05                 65536       003020000  0.93213
                   7.4883      0.93213       3.3510       1.0000      2.56708E+06               1052768       003030000  0.93161
0#######################################################################################################################
     vlvela Diagnostic printout, timehy =  0.5000000    , dt =  1.0000000E-03, ncount =       509, help =  3, lsuces =  0, fail = F
0Volume inlet and outlet terms
 ==================================================================================================================
        volno(i)             invcnt(l)
        avol(i)     iiflag   loop jx    junno(jx)  ivf ajun(jx)     voidfj(jx)   rhofj(jx)    velfj*ivf    arat(jx)
                                                       athrot(jx)   voidgj(jx)   rhogj(jx)    velgj*ivf    arat(jx+1)
 ==================================================================================================================
        003010000            1
        4.56037E-03
+                   outlet   1          003010000  1   4.56037E-03  5.45534E-02   905.12       0.74448       1.0000
                                                        1.0000      0.94545       3.3517       3.4533       1.0000
        003020000            2
        4.56037E-03
+                   inlet    1          003010000  1   4.56037E-03  5.45534E-02   905.12       0.74448       1.0000
                                                        1.0000      0.94545       3.3517       3.4533       1.0000
                    outlet   2          003020000  1   4.56037E-03  6.78738E-02   905.29       1.4061       1.0000
                                                        1.0000      0.93213       3.3510       7.4883       1.0000
        003030000            2
        4.56037E-03
+                   inlet    1          003020000  1   4.56037E-03  6.78738E-02   905.29       1.4061       1.0000
                                                        1.0000      0.93213       3.3510       7.4883       1.0000
                    outlet   2          003030000  1   4.56037E-03  6.83870E-02   905.60       2.1702       1.0000
                                                        1.0000      0.93161       3.3497       11.607       1.0000
0Volume average terms
 ==============================================================================================
        volno(i)   velf(i)      vvfx(ix)     vvfx(ix+1)   vrhof(ix)    vrhof(ix+1)  areav(ix)
                   velg(i)      vvgx(ix)     vvgx(ix+1)   vrhog(ix)    vrhog(ix+1)  areav(ix+1)
 ==============================================================================================
        003010000  0.74448      0.00000E+00  0.16764      0.00000E+00  0.22518      0.00000E+00
                    3.4533      0.00000E+00  4.99035E-02  0.00000E+00  1.44510E-02  4.56037E-03
        003020000   1.1113      0.16764      0.39401      0.22518      0.28021      4.56037E-03
                    5.4563      4.99035E-02  0.10667      1.44510E-02  1.42445E-02  4.56037E-03
        003030000   1.7897      0.39401      0.61292      0.28021      0.28243      4.56037E-03
                    9.5467      0.10667      0.16518      1.42445E-02  1.42313E-02  4.56037E-03
0#######################################################################################################################
   ms err t Diagnostic printout, timehy =  0.5000000    , dt =  1.0000000E-03, ncount =       509, help =  3, succes =  0, fail = F
 ---------------------------------------------------------------------------------------------------------------------
 Total mass error increment for this time step----------------------------------  1.17019E-07
 Mass + flow in - flow out mass error increment---------------------------------- -1.17019E-07
 Mean mass error increment------------------------------------------------------  6.26460E-06
```

Figure 1 Diagnostic edit from Edwards pipe problem with extras. (Continued)

```
Rms mass error increment-----------------------------------------  1.73157E-03
Mean mass error fraction-----------------------------------------  1.46810E-07
Rms mass error fraction------------------------------------------  8.75055E-07
Max. system or overall global mass error tolerance---------------  1.75966E-06
Controlling errmax-----------------------------------------------  1.76028E-06
```

Figure 1 Diagnostic edit from Edwards pipe problem with extras. (Continued)

```
 .

*comdeck jundatc
c
c  ijskp   junction skip factor.
c  njuns   number of junctions
c  ij1     from volume input code.
c  ij2     to volume input code.
c  jc      choking flag (1 bit); time dependent junction flag (2 bit);
c          reversed from volume connection flag (4 bit); reversed to
c          volume connection flag (8 bit); no choking flag (16 bit);
c          old time choking flag (32 bit); choking test flag for
c          accumulator junction (64 bit); input flag (128 bit); abrupt
c          area change flag (256 bit); two velocity-one velocity flag
c          (512 bit); separator flag (1024 bit); stratified flow flag
c          (2048 bit); from cross flow option (4096 bit); to cross flow
c          option (8192 bit); cross flow flag (16384 bit); accumulator
c          active flag (32768 bit); stratification flag (65536 bit);
c          stratification input data (bit pos. 18-19); jet mixer flags
c          (bit pos. 20-22); separator flags (bit pos. 23-25);
c          unused (bit pos. 26); horiz-vert junction flag (bit pos.27);
c          up-down junction flag (bit pos. 28); valve flag (bit
c          pos. 29); second turbine junction flag (bit pos. 30).
c  ij1vn   from volume ordinal number.
c  ij2vn   to volume ordinal number.
c  junftl(1)  from pointer in output form without sign.
c  junftl(2)  to pointer in output form without sign.
c  ajun    area of junction
c  athrot  ratio of orifice area to junction area
c  arat(1) mixture volumetric flow rate for the junction divided by
c          the total mixture volumetric flow rate on that end of the
c          volume.  mixture is obtained by using sum of absolute value
c          of phasic volumetric flow rates. 1 is for "from" volume.
c  arat(2) same as arat(1), except 2 is for "to" volume.
c  diamj   diameter of junction
c  ******  warning: the ordering of velfj, velfjo, velgj, velgjo, ufj,
c  ******  ugj, voidfj, voidgj, qualaj, rhofj, and rhogj must be
c  ******  maintained since vfinl assumes this order.
c  velfj   liquid velocity
c  velfjo  liquid velocity previous time step
c  velgj   vapor velocity
c  velgjo  vapor velocity previous time step
c  ufj     junction liquid specific internal energy
c  ugj     junction vapor specific internal energy
c  voidfj  junction liquid void fraction
c  voidgj  junction vapor void fraction
c  qualaj  junction noncondensible quality
c  rhofj   junction liquid density
c  rhogj   junction vapor density
c  velfjs  intermediate liquid velocity used when have bad donoring
c  velgjs  intermediate vapor velocity used when have bad donoring
c  fjunf   Constant term for form loss coefficient for irreversible
c          losses, foward.
c  fjunr   Constant term for form loss coefficient for irreversible
c          losses, reverse.
c  fjunfb  Multipler term for form loss coefficient for irreversible
c          losses, foward.
```

Figure 2 Listing of common block JUNDATC from program RELAP5-3D© .

```
.
c  fjunfc  Exponent term for form loss coefficient for irreversible
c           losses, foward.
c  fjunrb  Multipler term for form loss coefficient for irreversible
c           losses, reverse.
c  fjunrc  Exponent term for form loss coefficient for irreversible
c           losses, reverse.
c  formfj  liquid form loss term
c  formgj  vapor form loss term
c  mflowj  mass flow rate
c  faaj    virtual mass
c  fij     interphase friction
c  fijo    interphase friction previous time step
c  jcatn   density correction factor (sqrt of rhot/rhoj) applied to
c          the junction convective term in choking
c  jacto   density correction factor applied to the junction convective
c          term in choking previous time step
c  qualnj(1)  first noncondensible junction mass fraction
c  qualnj(2)  second noncondensible junction mass fraction
c  qualnj(3)  third noncondensible junction mass fraction
c  qualnj(4)  fourth noncondensible junction mass fraction
c  qualnj(5)  fifth noncondensible junction mass fraction
c  ij1nx   from volume index.
c  ij2nx   to volume index.
c  jcnx1   index to scratch space for "from" volume.  next word is
c          same for "to" volume.
c  jcnx2   index to diagonal matrix element for "from" volume.  next
c          word is same for "to" volume.
c  jcnx3   index to off-diagonal matrix element for "from" volume. next
c          word is same for "to" volume.
c  jcnxd(1)  diagonal index for sum momentum equation
c  jcnxd(2)  diagonal index for difference momentum equation
c  jcnxs   index to scratch space for junction.
c  junno   junction number for output editing
c  jdissc  subcooled discharge coefficient.
c  jdistp  two phase discharge coefficient.
c  jcex    unused (bit pos. 1); ccfl flag (bit pos. 2);
c          input ccfl flag (bit pos. 3); junction flow regime number
c          (bit pos. 4-9); to face-1 bits (bit pos. 10-12); from face-1
c          bits (bit pos. 13-15); input donor pressure flag
c          (bit pos. 16); water packer junction flag (bit pos. 17);
c          stretch junction flag (bit pos. 18); eccmix flags (bit
c          pos. 19-20); debug print flag (bit pos. 21),
c          water packing flag(bit pos. 22).
c  betacc  form of ccfl correlation (0 = wallis, 1 = kutateladze)
c  constc  gas intercept for ccfl correlation
c  constm  slope for ccfl correlation
c  c0j     junction distribution coefficient
c  c0jo    junction distribution coefficient previous time step
c  xej     junction equilibrium quality
c          based on extrapolated pressure & internal energy from jchoke
c  sonicj  junction sound speed
c          divided by the junction density ratio (jcatn)
c  vodfjo  junction liquid void fraction previous timestep
c  vodgjo  junction vapour void fraction previous timestep
c  vdfjoo  junction liquid void fraction previous timestep but one
```

Figure 2 Listing of common block JUNDATC from program RELAP5-3D© . (Continued)

```
.
c  vdgjoo  junction vapour void fraction previous timestep but one
c  fxj     wall friction interpolating factor
c  fxjo    wall friction interpolation factor previous time step
c  vgjj    vapor drift velocity
c  florgj  junction flow regime number in real format
c  iregj   vertical bubbly/slug flow junction flow regime number in
c          real format
c  voidj   junction vapor void fraction used in the interphase drag
c  jdissh  superheated discharge coefficient
c  ijflg   Junction direction flag (0 = 1D/1D or 1D/3D or 3D/1D,
c          1 = 3D/3D direction 1, 2 = 3D/3D direction 2, 3 = 3D/3D
c          direction 3).
c  flenth  Total enthalpy flow in junction (includes both phases and
c          noncondensibles).
$if def,selap,2
c  ajuno   Old ajun.
c  diamjo  Old diamj.
```

Figure 2 Listing of common block JUNDATC from program RELAP5-3D© . (Continued)

```
 .
*comdeck voldatc
c
c  ivskp   volume skip factor.
c  nvols   number of volumes.
c  vctrl   time dependent volume flag (bit pos. 1); equilibrium flag
c          (bit pos. 2); thermal front flag (bit pos. 3); input flag
c          (bit pos. 4); vapor disappearance flag (bit pos. 5);
c          accumulator flag (bit pos. 6); pump flag (bit pos. 7);
c          input water packer flag (bit pos. 8); new status flags,
c          initialization type during input (bit pos. 9-19);
c          old status flags (bit pos. 20-30); input bundle flag
c          (bit pos. 31).
c          Status flags: negative pressure (bits 9, 20); mass error
c          (bits 10, 21); extrapolation error (bits 11, 22); quality
c          overrun (bits 12, 23); largest mass error (bits 13, 24);
c          error in vapor phase (bits 14, 25); error in liquid phase
c          (bits 15, 26); error in two phase call (bits 16, 27); non-
c          convergence in iterations (bits 17, 28); negative sonic
c          velocity (bits 18, 29); negative derived quantities (bits 19,
c          30).
c  vctrlx  Status flags; debug print flag (bit pos. 1), air appearance
c          repeat(bit pos. 2), pressure change repeat on air appearance
c          (bit pos. 3 ), water packing statistics flag( bit pos. 4).
c  volmat  Fluid type in volume.
c  volno   Volume number for editing.
c  imap    Map, regime, and flags.  Three quantities, one per
c          coordinate.  Flow regime map infomation (bit pos. 1-6);
c          non-condensable gas appearance flag (bit pos. 7);
c          horizontal stratification flag (bit pos. 8);
c          (bit pos. 8); stretch flag (bit pos. 9); input vertical
c          stratification flag (bit pos. 10); vertical stratification
c          flags (bit pos. 11-12); experimental friction being used
c          (bit pos. 13); wall friction input flag (bit pos. 14); flag
c          that coordinate direction is being used (bit pos. 15); water
c          packer input flag (bit pos. 16); bundle input flag
c          (bit pos. 17); volume in multid component (bit pos. 18);
c          flow  regime number (bit pos. 19-24); metal appearance flags
c          (bit pos. 25-26); laminar friction factor, 64 if 0, 96 if 1
c          (bit pos. 27); ans input flag (bit pos. 28); level tracking
c          input flag (bit pos. 29);  reflood flag (bit pos. 30);
c          water packer  volume flag (bit pos. 31).
c  v       Volume.
c  recipv  Reciprocal of volume (v), zero if v is zero.
c  avol    Area of volume, three quantities, one per coordinate.
c  dl      Volume length, three quantities, one per coordinate.
c  diamv    Equivalent flow diameter, three quantities, one per
c           coordinate.
c  roughv    Wall roughness factor for direction 1.  As input
c            reset in icmpn1 to colebrook full turb friction fac.
c  recrit     Critical reynolds number, three quantities, one per
c             coordinate.  Fric fac = const; see roughv.
c  p       Average pressure.
c  po      Average pressure previous time step.
c  uf      Liquid specific internal energy.
c  ufo     Liquid specific internal energy previous time step.
```

Figure 3 Listing of common block VOLDATC from program RELAP5-3D© .

```
      .
c  ug      vapor specific internal energy.
c  ugo     vapor specific internal energy previous time step.
c  voidf   liquid void fraction.
c  voidg   vapor void fraction.
c  voidgo  vapor void fraction previous time step (n).
c  vodgoo  vapor void fraction at old old time step (n-1).
c  quala   noncondensible quality..
c  qualao  noncondensible quality previous time step.
c  boron   boron density (mass of boron per cell volume).
c  borono  boron density previous time step.
c  quals   static quality.
c  quale   equilibrium quality.
c  rho     total density.
c  rhom    total density for mass error check.
c  rhoo    total density previous time step.
c  ******  warning: the ordering of rhof and rhog must be maintained
c  ******  since fidis assumes this order.
c  rhof    liquid density.
c  rhog    vapor density.
c  satt    saturation temperature based on the steam partial pressure.
c  temp    used in r level subroutines and is usually the same as satt.
c  tempf   liquid temperature.
c  tempg   vapor temperature.
c  velf(1) Average liquid velocity in a volume, three quantities, one
c          per coordinate.
c  velg    Average vapor velocity in a volume, three quantities, one per
c          coordinate.
c  sounde  homogeneous equilibrium sound speed. also, used for scratch
c          in hydro.
c  dsnddp  partial derivative of sounde w/r to pressure. also, used for
c          scratch in hydro.
c  sathf   liquid specific enthalpy at saturation conditions.
c  sathg   vapor specific enthalpy at saturation conditions.
c  betaff  Liquid isobaric coefficient of thermal expansion at bulk
c          conditions.
c  betagg  Vapor isobaric coefficient of thermal expansion at bulk
c          conditions.
c  csubpf  Liquid specific heat capacity at constant pressure at bulk
c          conditions.
c  csubpg  Vapor specific heat capacity at constant pressure at bulk
c          conditions.
c  viscf   Liquid viscosity.
c  viscg   Vapor viscosity.
c  sigma   Surface tension.
c  thconf  Liquid thermal conductivity.
c  thcong  Vapor thermal conductivity.
c  pps     Vapor partial pressure.
c  dotm    Vapor generation rate per unit volume.
c  dotmo   Vapor generation rate per unit volume previous time step.
c  hif     Liquid side interfacial heat transfer coefficient per unit
c          volume.
c  hig     Vapor side interfacial heat transfer coefficient per unit
c          volume.
c  gammaw  Vapor generation rate at the wall per unit volume.
c  q       total heat transfer rate from wall to fluid.
```

Figure 3 Listing of common block VOLDATC from program RELAP5-3D© . (Continued)

```
c  qwg     heat transfer rate from wall to vapor.
c  drfdp   partial derivative of rhof w/r to pressure.
c  drfduf  partial derivative of rhof w/r to liquid specific internal
c          energy.
c  drgdp   partial derivative of rhog w/r to pressure.
c  drgdug  partial derivative of rhog w/r to vapor specific internal
c          energy.
c  drgdxa  partial derivative of rhog w/r to noncondensible quality.
c  dtfdp   partial derivative of tempf w/r to pressure.
c  dtfduf  partial derivative of tempf w/r to liquid specific internal
c          energy.
c  dtgdp   partial derivative of tempg w/r to pressure.
c  dtgdug  partial derivative of tempg w/r to vapor specific internal
c          energy.
c  dtgdxa  partial derivative of tempg w/r to noncondensible quality.
c  dtdp    partial derivative of satt w/r to pressure.
c  dtdug   partial derivative of satt w/r to vapor specific internal
c          energy.
c  dtdxa   partial derivative of satt w/r to noncondensible quality.
c  floreg  flow regime number in real format, three quantities, one per
c          coordinate.
c  hifo    liquid side interfacial heat transfer coefficient per unit
c          volume previous timestep.
c  higo    vapor side interfacial heat transfer coefficient per unit
c          volume previous timestep.
c  qualan  Noncondensible mass fraction, five quantities, one per
c          species.
c  gaman   Noncondensible generation rate per unit volume,
c          five quantities, one per species.
c  enthn   Enthalpy of noncondensible source, five quantities, one per
c          species.
c  gamas   solute generation rate per unit volume.
c  enths   enthalpy of the solute source.
c  vo      volume previous time step.
c  qualno  Noncondensible mass fraction previous time step, five
c          quantities, one per species.
c  rhogo   vapor density previous time step.
c  ppso    vapor partial pressure (old-time).
c  ustm    vapor specific internal energy at pps and tempg with non-
c          condensable present.
c  ustmo   vapor specific internal energy at pps and tempg with non-
c          condensable present (old-time).
c  ggas    Cell centered gas mass flux, three quantities, one per
c          coordinate.
c  gliq    Cell centered liquid mass flux, three quantities, one per
c          coordinate.
c  velfo   Volume average liquid velocity previous timestep, three
c          quantities, one per coordinate.
c  velgo   Volume average vapor velocity previous timestep, three
c          quantities, one per coordinate.
c  fstrt   horizontal stratification interpolating factor, three
c          quantities, one per coordinate.
c  fwalf   liquid wall friction coefficient, three quantities, one per
c          coordinate.
c  fwalg   vapor wall friction coefficient, three quantities, one per
```

Figure 3 Listing of common block VOLDATC from program RELAP5-3D© . (Continued)

```
      .
c          coordinate.
c  vctrln  position of volume in volume block.
c  vctrld  index to diagonal matrix element.
c  vctrls  index to volume scratch space.
c  sth2xv  index data for sth2x water property subroutines.
c  invfnd  index to inverted junction table.
c  sinb    sine function of volume vertical angle, three quantities, one
c          per coordinate.
c  hvmix   volume mixture enthalpy.
c  ptans   pitch between fuel plates (ans).
c  span    length of fuel plates  (ans).
c  pecltv  Volume Peclet number, three quantities, one per coordinate.
c  tsatt   saturation temperature based on the total pressure.
c  fshape  Wall friction shape factor (one per coordinate).
c  fmurex  Viscosity ratio for wall friction (one per coordinate).
c  hgf     Direct heating heat transfer coefficient per unit volume.
c  frica   Constant term in experimental friction correlation (one per
c          coordinate).
c  fricb   Multiplier term in experimental friction correlation (one per
c          coordinate).
c  fricc   Power term in experimental friction correlation (one per
c          coordinate).
c  invhtf  index to inverted heat structure table.
c  hydxc(1)  Change along inertial x axis due to moving from face 1
c            to center of volume along local x coordinate.
c  hydxc(2)  Change along inertial x axis due to moving from center of
c            volume to face 2 along local x coordinate.
c  hydxc(3)  Change along inertial x axis due to moving from face 3
c            to center of volume along local y coordinate.
c  hydxc(4)  Change along inertial x axis due to moving from center of
c            volume to face 4 along local y coordinate.
c  hydxc(5)  Change along inertial x axis due to moving from face 5
c            to center of volume along local z coordinate.
c  hydxc(6)  Change along inertial x axis due to moving from center of
c            volume to face 6 along local z coordinate.
c  hydyc(1)  Change along inertial y axis due to moving from face 1
c            to center of volume along local x coordinate.
c  hydyc(2)  Change along inertial y axis due to moving from center of
c            volume to face 2 along local x coordinate.
c  hydyc(3)  Change along inertial y axis due to moving from face 3
c            to center of volume along local y coordinate.
c  hydyc(4)  Change along inertial y axis due to moving from center of
c            volume to face 4 along local y coordinate.
c  hydyc(5)  Change along inertial y axis due to moving from face 5
c            to center of volume along local z coordinate.
c  hydyc(6)  Change along inertial y axis due to moving from center of
c            volume to face 6 along local z coordinate.
c  hydzc(1)  Change along inertial z axis due to moving from face 1
c            to center of volume along local x coordinate.
c  hydzc(2)  Change along inertial z axis due to moving from center of
c            volume to face 2 along local x coordinate.
c  hydzc(3)  Change along inertial z axis due to moving from face 3
c            to center of volume along local y coordinate.
c  hydzc(4)  Change along inertial z axis due to moving from center of
c            volume to face 4 along local y coordinate.
```

Figure 3 Listing of common block VOLDATC from program RELAP5-3D© . (Continued)

```
.
c  hydzc(5)  Change along inertial z axis due to moving from face 5
c            to center of volume along local z coordinate.
c  hydzc(6)  Change along inertial z axis due to moving from center of
c            volume to face 6 along local z coordinate.
c  hyposv(1)  Coordinate along x inertial axis of vector from center
c             of rotation to center of volume.
c  hyposv(2)  Coordinate along y inertial axis of vector from center
c             of rotation to center of volume.
c  hyposv(3)  Coordinate along z inertial axis of vector from center
c             of rotation to center of volume.
c  gravv(1)  Coordinate of gravity along inertial x coordinate.
c  gravv(2)  Coordinate of gravity along inertial y coordinate.
c  gravv(3)  Coordinate of gravity along inertial z coordinate.
c  tintf     Interface temperature when noncondensible is presentR,
c            saturation temperature at total pressure otherwise.
c  htsens    Heat transfer coefficient for sensible heat transfer
c            between vapor/gas mixture and liquid.
c  tmassv    Total mass (includes both phases and noncondensibles) in
c            volume.
c  tiengv    Total internal energy (of both phases and noncondensibles)
c            in volume.
$if def,selap
c  idbvol  indicator of whether l-th index of relap5 volume contains
c          debris region; 0 = no, 1 = yes.
c  mdbvol  value for l-th relap5 volume index of index m for
c          referencing arrays in common block debcom.
c  ndbvol  value for l-th relap5 volume index of index n for
c          referencing arrays in common block debcom.
$if def,athena
c  bfield  strength of magnetic field acting on volume.
c  econdw  electrical conductivity of duct wall.
c  fwfmhd  equivalent wall friction coefficient due to mhd effects.
c  hwidth  duct half-width.
c  wthick  thickness of duct wall.
c  igmhd   duct geometry type; 1=circular, 2=rectangular.
$endif
c  avolo   Old value of avol.
c  diamvo  Old value of diamv.
$endif
c  dlev    location of two-phase mixture level
c  dlevo   location of two-phase mixture level (old time)
c  vlev    velocity of two-phase level movement
c  vollev  Position of level within volume.
c  voidla  void fraction above the mixture level
c  voidao  void fraction above the mixture level (old time)
c  voidlb  void fraction below the mixture level
c  voidbo  void fraction below the mixture level (old time)
c  dfront    location of thermal front
c  dfrnto   location of thermal front (old time)
c  vfront    velocity of thermal front
c  ufla  liquid internal energy above the thermal front
c  ufao  liquid internal energy aaove the thermal front (old time)
c  uflb  liquid internal energy below the thermal front
c  ufbo  liquid internal energy below the thermal front (old time)
```

Figure 3 Listing of common block VOLDATC from program RELAP5-3D© . (Continued)