SCALE UP OF CERAMIC WASTE FORMS FOR THE EBR-II SPENT FUEL TREATMENT PROCESS

2014 International Pyroprocessing Research Conference

Ken Bateman and Matt Morrison - Idaho National Laboratory
Michael Simpson – University of Utah

Idaho Falls, ID, October 19 – October 24, 2014

www.inl.gov

Idaho National Laboratory

Pyroprocessing of EBR-II Spent Fuel

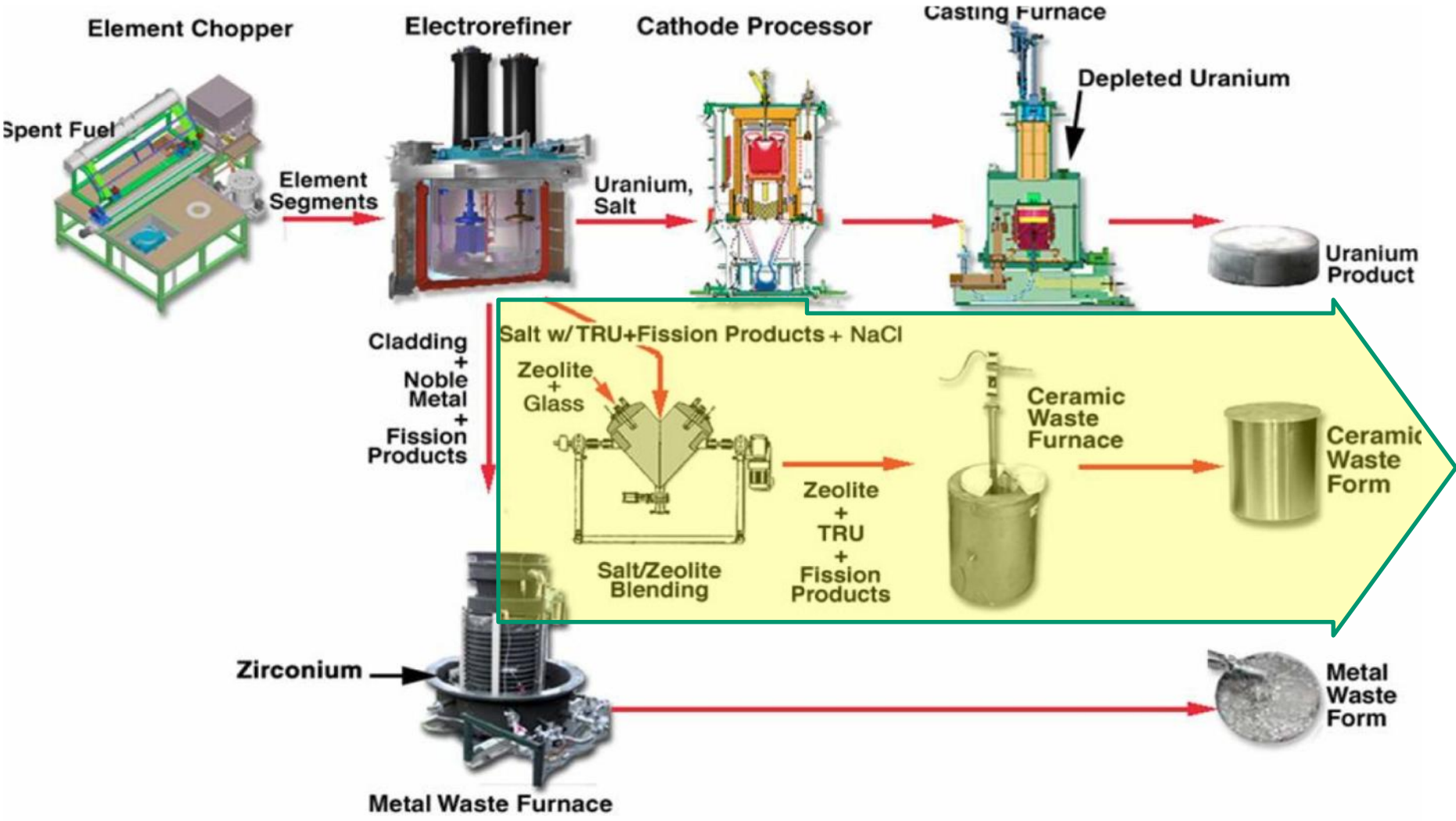

Ceramic Waste Process

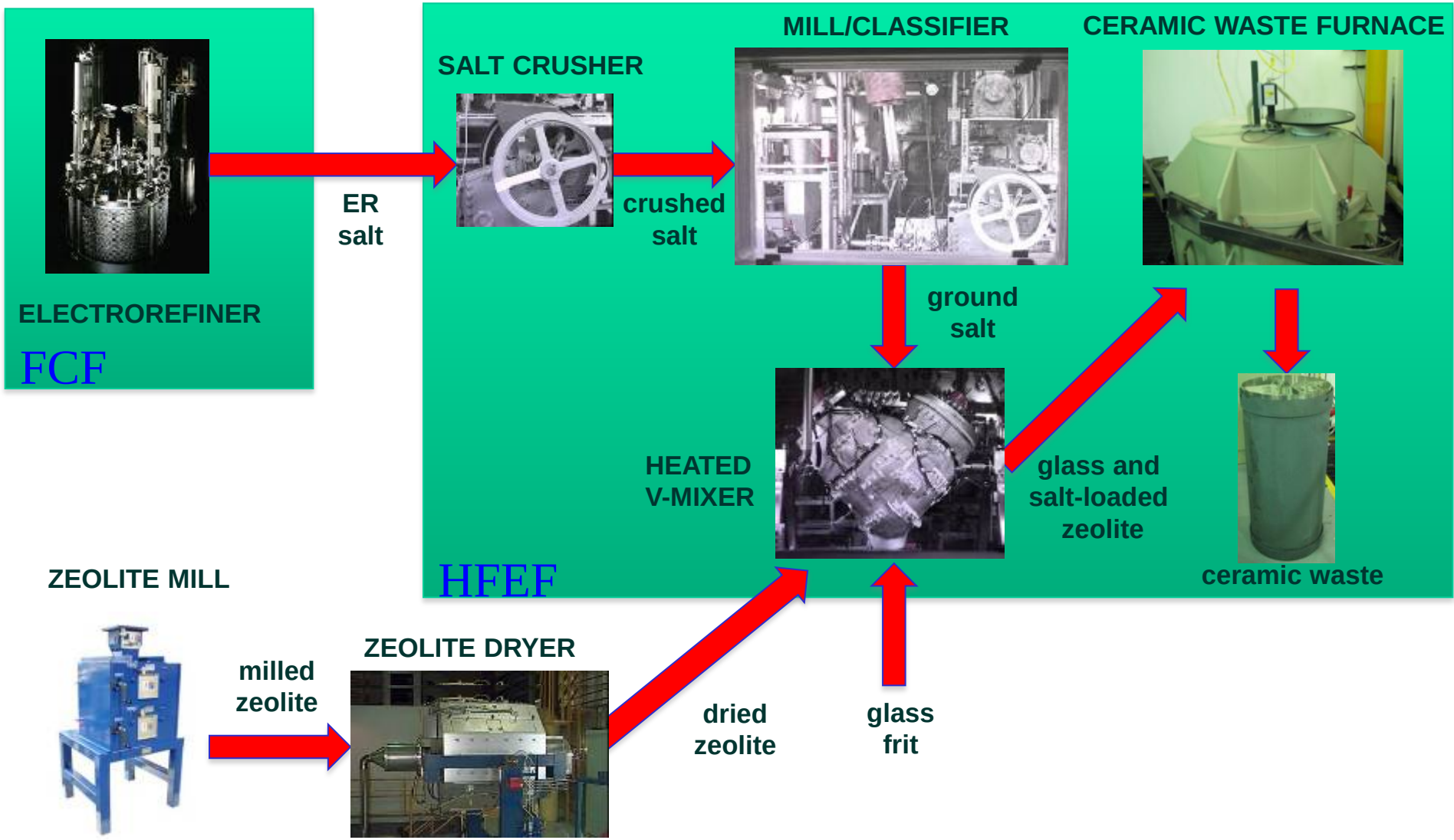

Materials Needed for a Full-Scale (400 kg) Waste Form

- Borosilicate glass powder – 100 kg
- Zeolite-4A (dry, 45-250 μm) – 270 kg
  - Milled using roller mills
  - Sieved using shaker table to remove coarse and fine material
- ER salt surrogate – 30 kg
  - Nondoped - LiCl-KCl eutectic salt (44.2 wt% LiCl, 55.8 wt% KCl)
  - Doped

Salt	Wt. %	Salt	Wt. %
LiCl-KCl	68.9%	KI	0.2%
NaCl	15.0%	YCl_3	0.7%
CsCl	3.0%	$NdCl_3$	5.0%
$SrCl_2$	2.2%	$CeCl_3$	5.0%

Zeolite Drying

- Material:
  - Zeolite-4A
  - Molecular Sieve
  - Can hold up to ~20 wt% water in equilibrium with ambient air.
- Ceramic waste process requirements:
  - <1 wt% water content
    - Minimizes corrosion due to salt-water-metal interactions
    - Maximizes capacity for zeolite to hold salt
    - Minimize pores in ceramic waste form
  - Sized to 45-250 µm
    - Similar to salt particle size
- Nominal drying method:
  - Rotating retort heated to 550°C
  - Apply vacuum-nitrogen purge
  - Keep zeolite fluidized
- Zeolite sample testing:
  - Moisture (Karl-Fischer Titration, Near Infrared Absorption)
  - Rehydration capacity

Drying Results

- Averages of 0.48, 0.96, 0.39, 0.55 Wt% residual water for the first three pre-qualification test runs
- High moisture contents attributed to moisture pick up during material transfers and large batch sizes
- Reference cycle includes ~12 hr hold at 550°C and results in 0.3% moisture.

Material Preparation Run #	Batch #	Avg. Wt% Water/Batch	Avg. Wt% Water/Run
1	1	0.61	0.48
	2	0.36	
	3	0.60	
	4	0.33	
2	1	0.21	0.96
	2	1.00	
	3	0.15	
	4	2.86	
3	1	0.29	0.39
	2	0.90	
	3	0.20	
	4	0.20	
4	1	0.35	0.55
	2	0.55	
	3	0.65	
	4	0.65	

Salt/Zeolite Blending

- Custom engineered v-blender:
  - T>500°C via immersion and strip heaters
  - Heat up time ≈ 4-5 hours
  - Constantly rotates to promote uniform salt sorption
  - 120 kg batch limit
- Process goal is to absorb >97% of the salt into the zeolite.
- After salt-loaded zeolite cools, glass powder is blended in as a binder

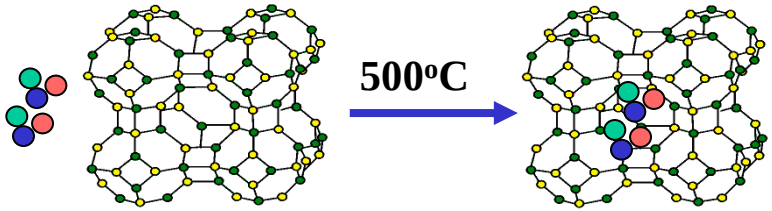

V-Mixing Results

- Average 0.56, 0.20, 0.74, and 0.26 Wt% free chloride for the first three pre-qualification test runs
- Reference cycle includes ~15 hr hold at 500°C and results in 0.5 Wt% free chloride

Material Preparation Run #	Batch #	Avg. Wt% Free Chloride/Batch	Avg. Wt% Free Chloride/Run
1	1	0.14	0.56
	2	1.10	
	3	0.64	
	4	0.43	
2	1	0.35	0.20
	2	0.17	
	3	0.23	
	4	0.03	
3	1	0.11	0.74
	2	0.26	
	3	3.52	
	4	0.22	
4*	1	0.39	0.26
	2	0.38	
	3	0.18	
	4	0.08	

* Doped salt simulant

Pressureless Consolidation

- After blending salt-loaded zeolite with glass, conversion to monolithic sodalite waste form is the final step.
- Parameters for full-scale PC furnace run:
  - Maximum temperature 925°C
  - 10 to 12.5 day temperature cycle
  - 400 kg waste form capacity (7.5 wt% salt)

	Run #1	Run #2	Run #4
Salt	LiCl-KCl	LiCl-KCl	Doped LiCl-KCl
Container	Single piece	Three Piece	Three Piece
Temp increase (RT to 500˚C)	1˚C/min	1˚C/min	1˚C/min
500˚C Hold time	40 hours	40 hours	60 hours
Temp increase (500˚C to 925˚C)	1˚C/min	1˚C/min	0.5˚C/min
925˚ C Hold time	75 hours	75 hours	75 hours
Forced Cooling?	Yes	Yes	No

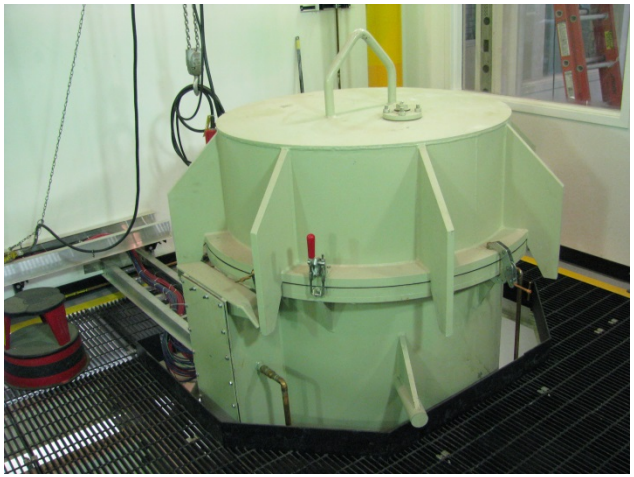

CWF Sampling

- Sectioning - Lower, middle, and upper portions of the CWF
- X-ray diffraction
- Density : Helium pycnometry, Immersion, Volume/weight measurement of CWF

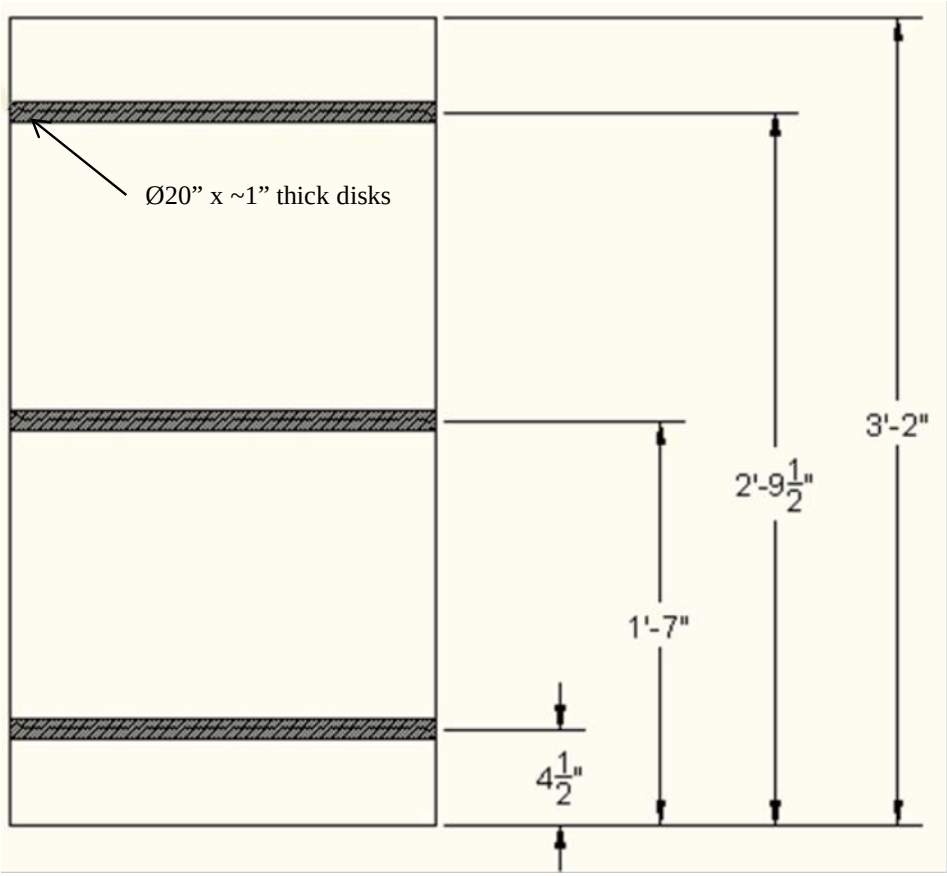

Run #1 (Baseline)

- Material loaded into single-piece container for consolidation
- Furnace zone temperatures recorded during consolidation
- Cracking audible during cooling and visible following sectioning
- 60% volume reduction

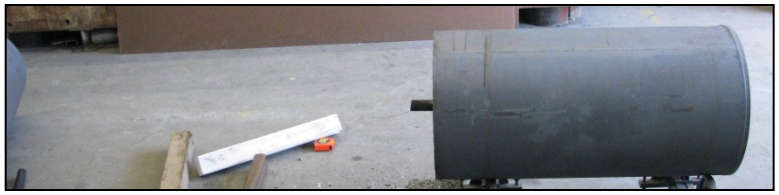

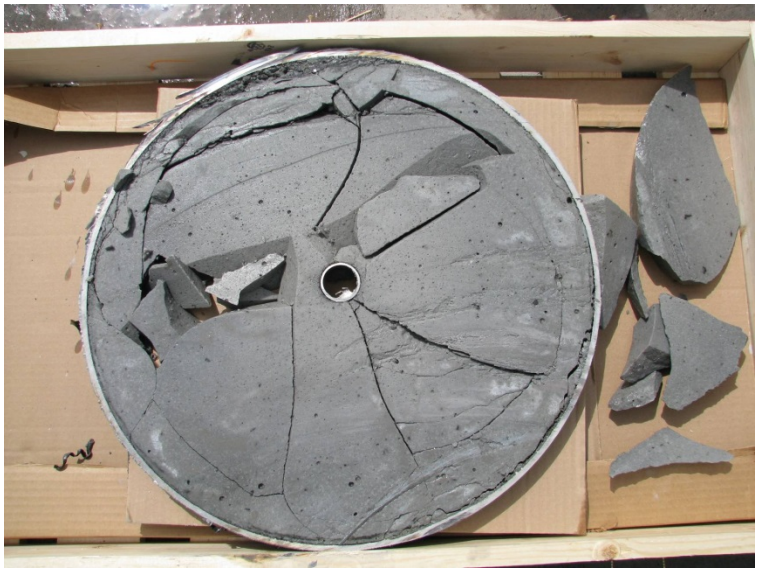

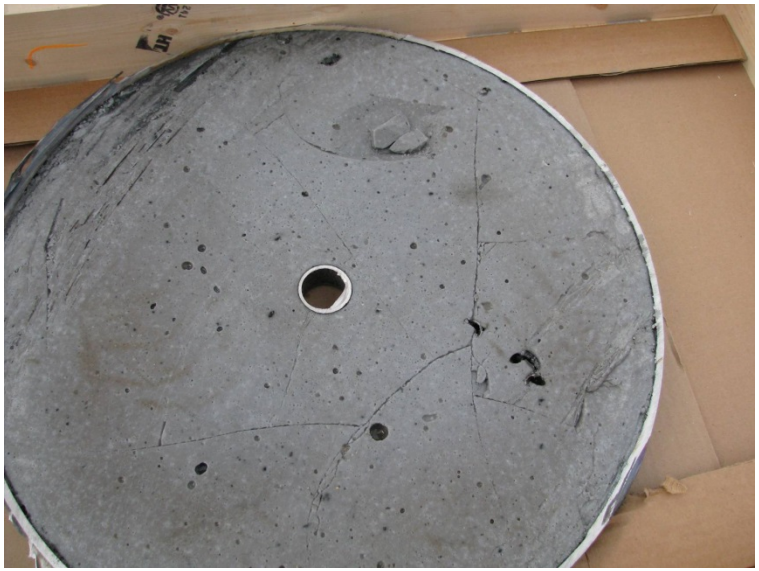

CWF Process Improvements

- Time-of-flight laser sensor to measure material height as it consolidates

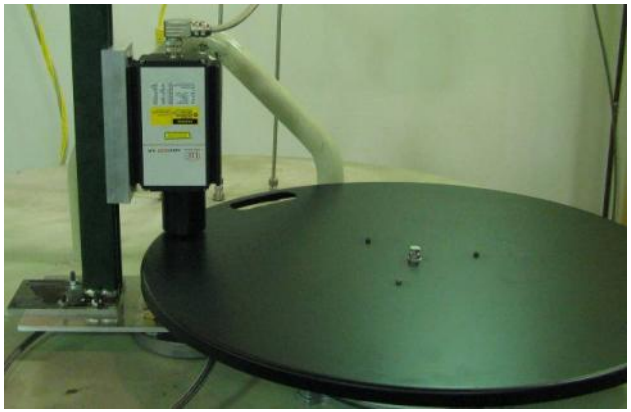

- Sound recording to identify when cracks occur

- Auxiliary Thermocouples to measure the external and core temperatures of the CWF

- Multi-Section Container design

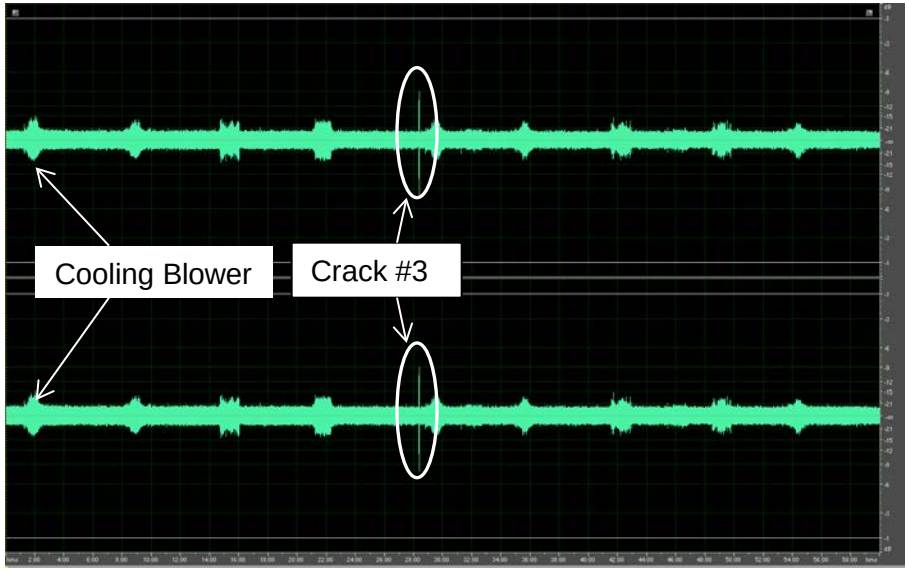

Multi-Section Ceramic Waste Container

- Multiple Section CWF Container:
  - Developed to minimize empty space in container that results from the consolidation process
  - Bottom section contains consolidated CWF
  - Top two sections are reused as the bottom and middle sections of the next CWF container assembly
  - A new top section and bottom plate are sent in cell to complete the next CWF container assembly

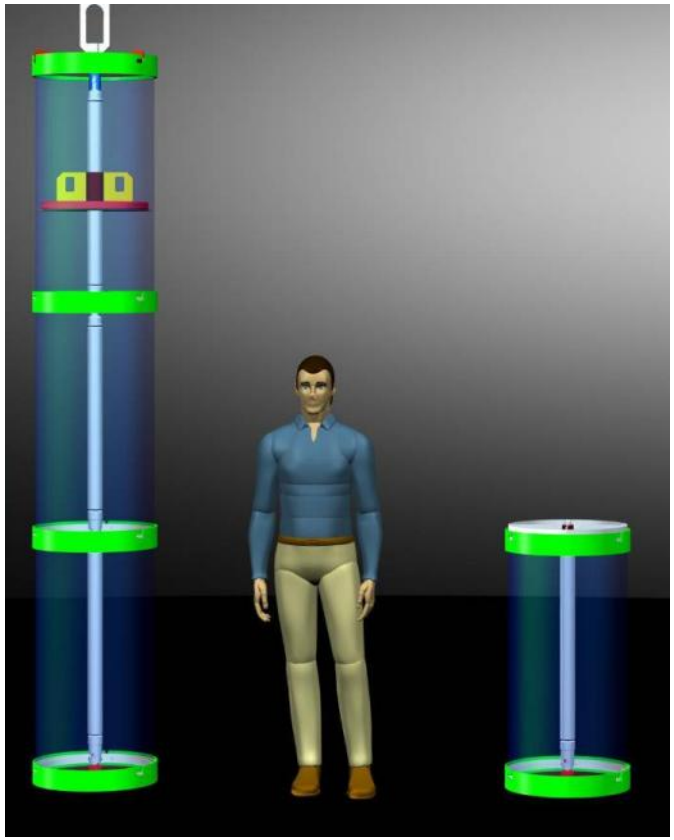

CWF Container Assembly Sequence

Bottom Plate Assembly

Attach Bottom Rod to Bottom Plate Assembly

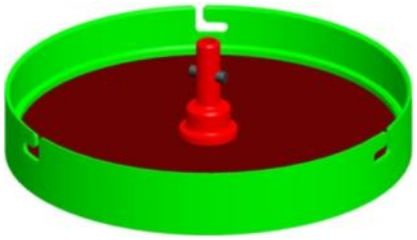

Attach Ball-Lock Pin to ensure the Bottom Rod cannot uncouple from Bottom Plate Assembly

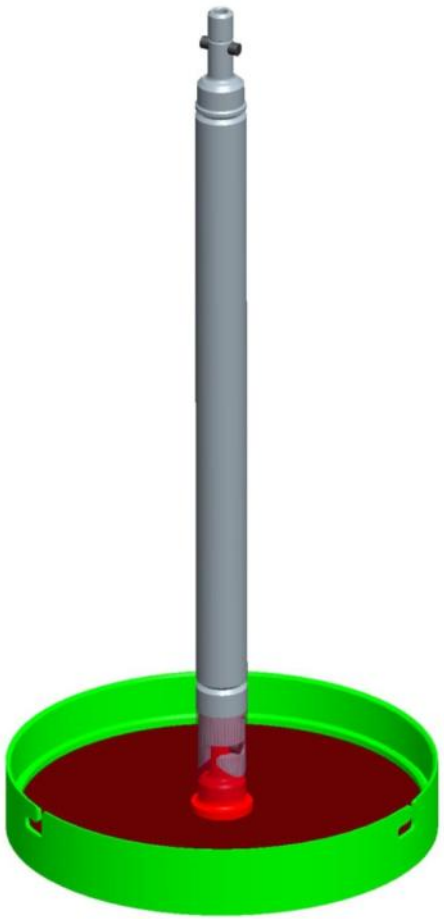

Bottom Rod attached to Bottom Plate Assembly

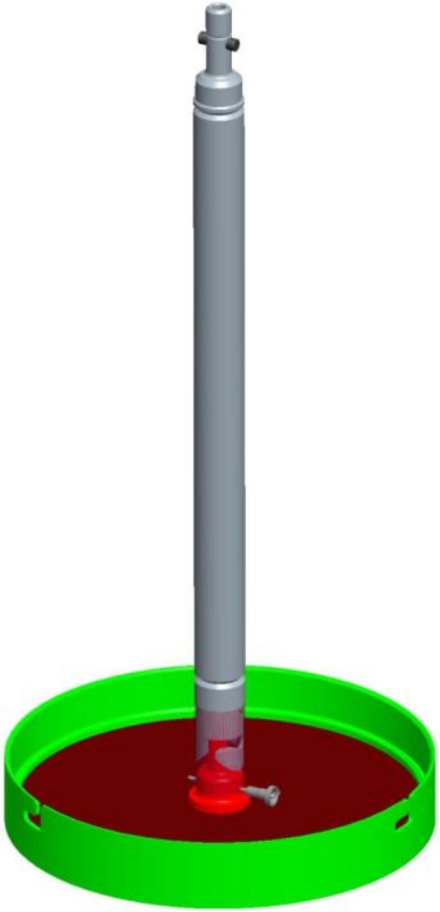

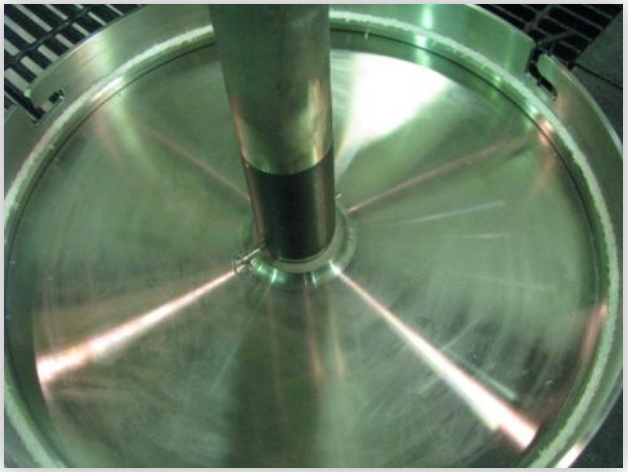

Install Bottom Container Section to Bottom Assembly

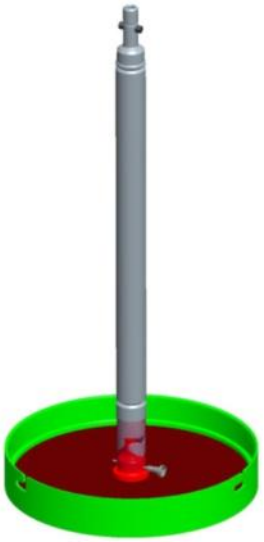

Bottom Rod, Plate, and Container Assemblies

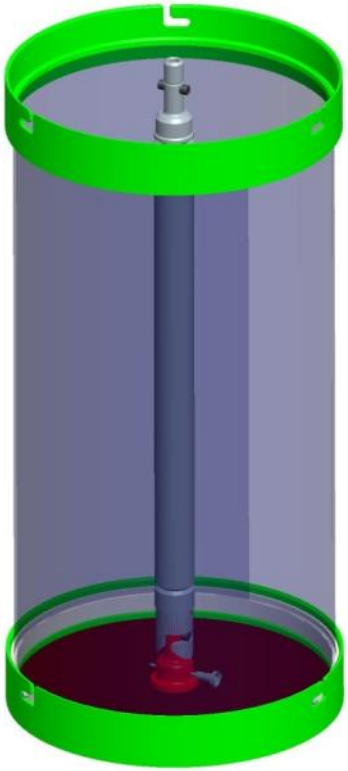

CWF Furnace and Clamp

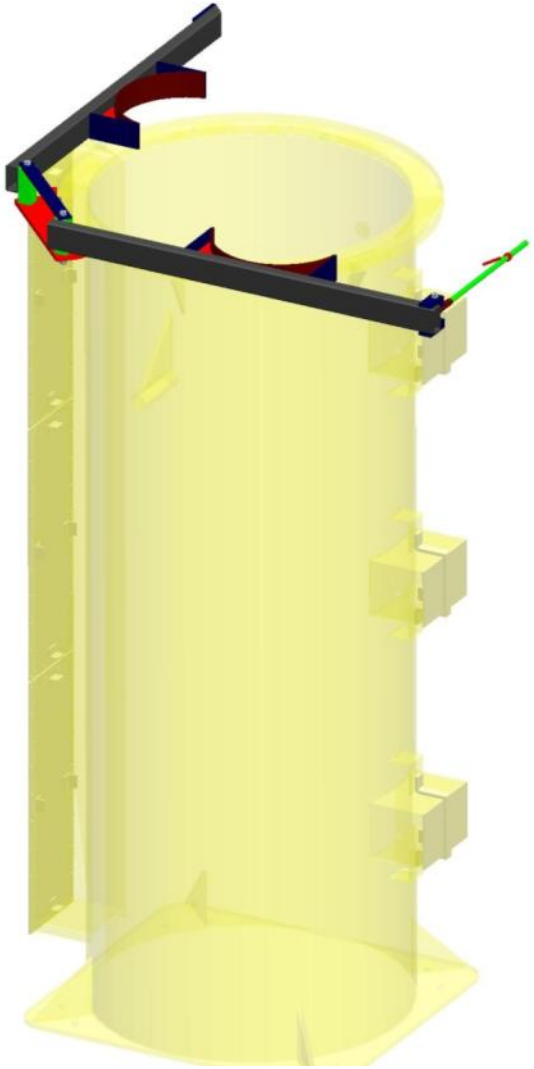

Move Bottom Rod, Plate, and Container Assemblies to CWF Furnace

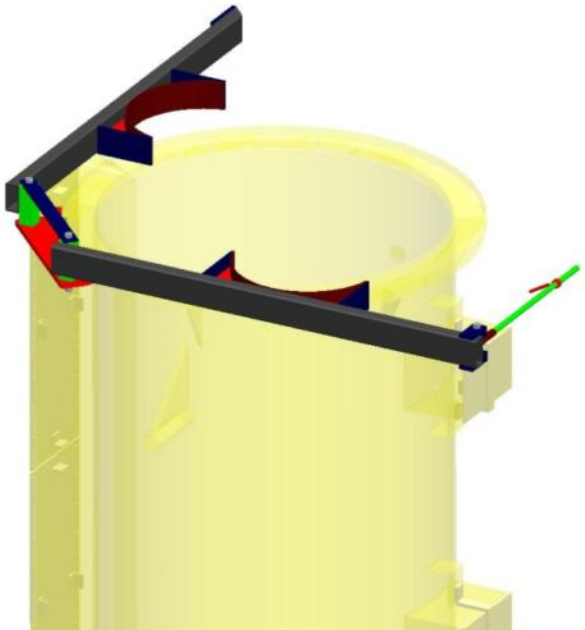

Suspend Bottom Rod, Plate, and Container Assemblies with Clamp

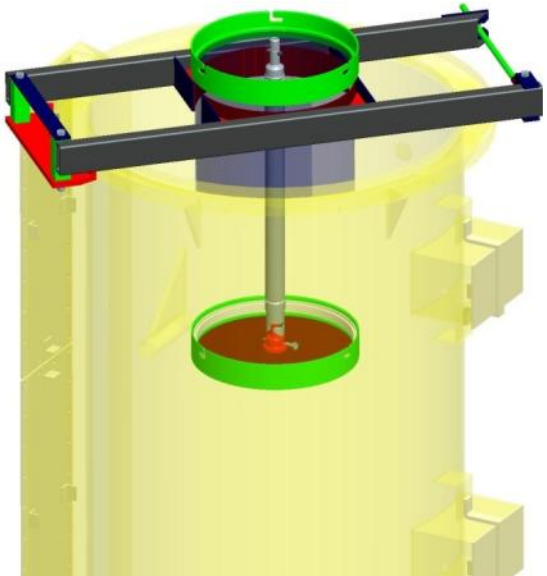

Attach Middle Rod to Bottom Rod

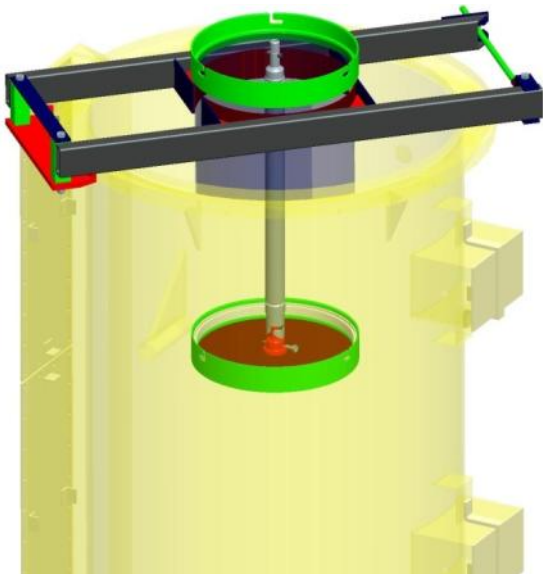

Attach Middle Rod to Bottom Rod

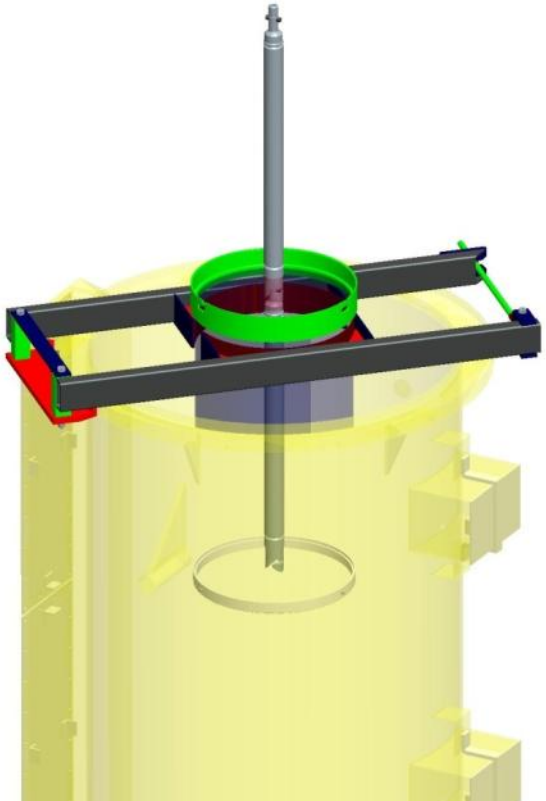

Attach Middle Container Section to Bottom Container Section

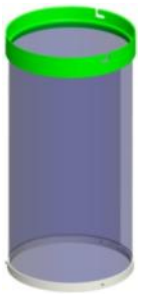

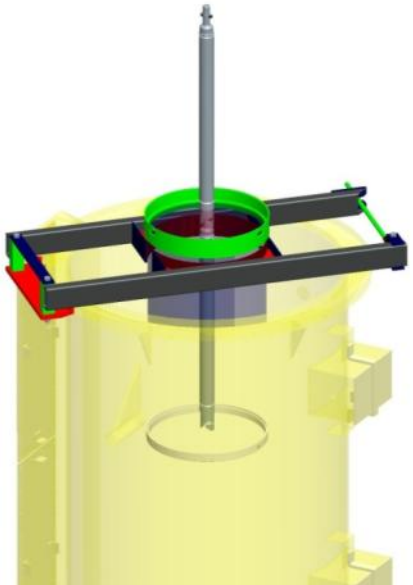

Attach Middle Container Section to Bottom Container Section

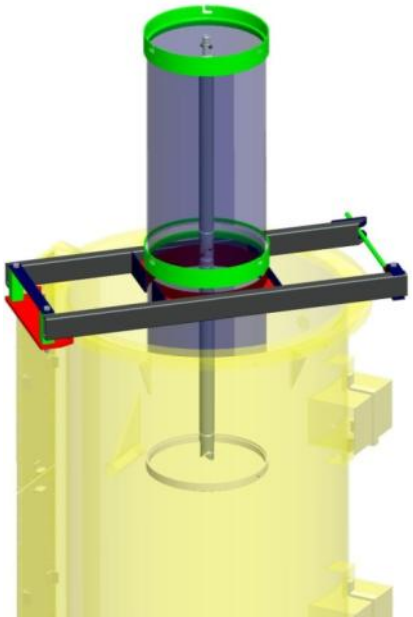

Attach EM Lifting Handle, unclamp, lower by one section and re-clamp

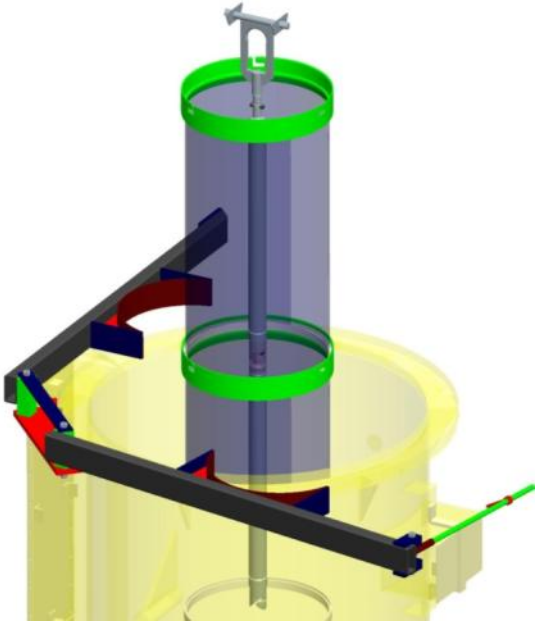

Attach Top Rod to Middle Rod

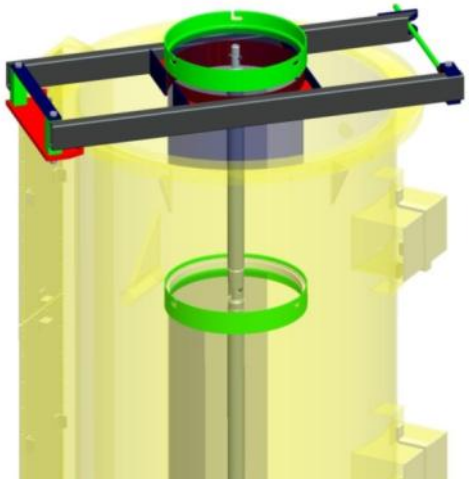

Attach Top Rod to Middle Rod

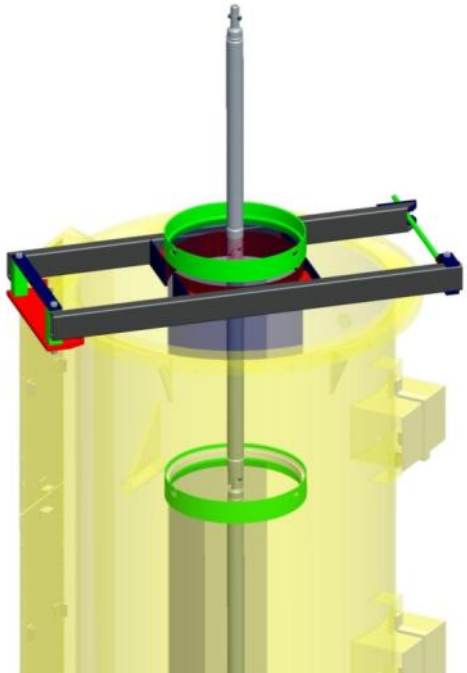

Attach Top Container Section to Middle Container Section

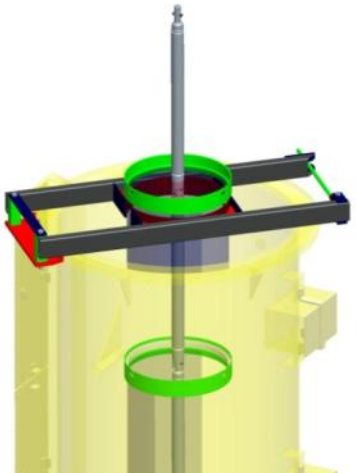

Install Top Guide

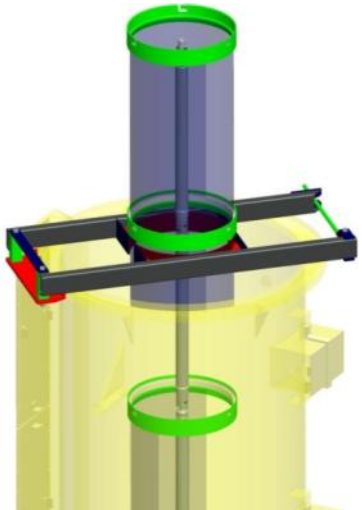

Unclamp and lower until CWF Container Assembly rests on furnace floor

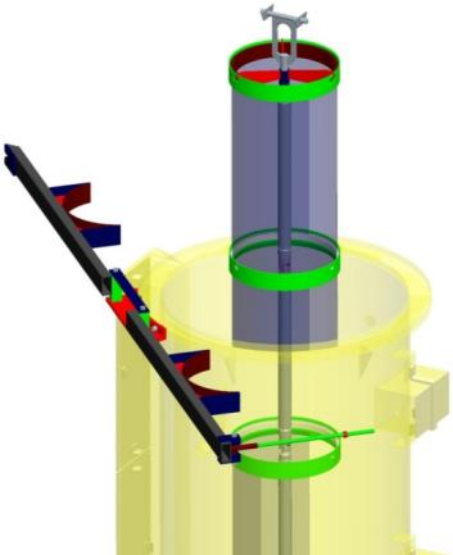

Unclamp and lower until CWF Container Assembly rests on furnace floor

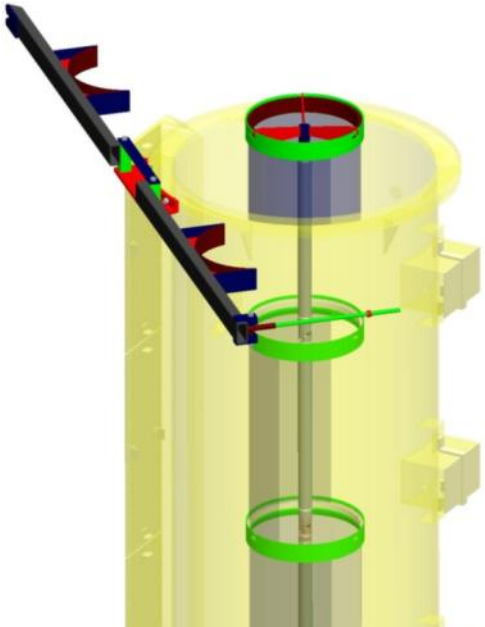

Load CWF Material

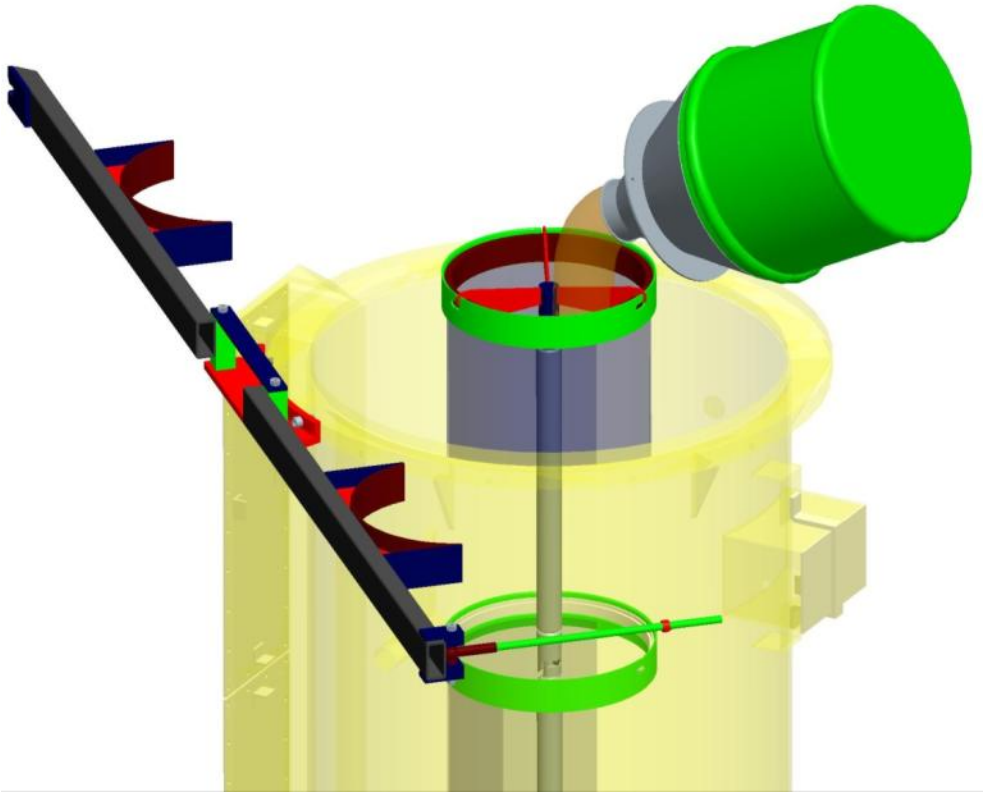

Install Scraper Plate

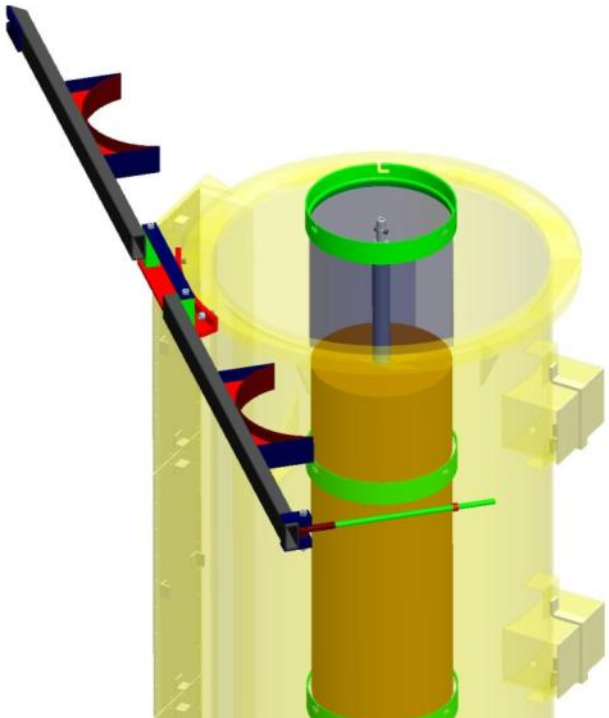

Install Weight

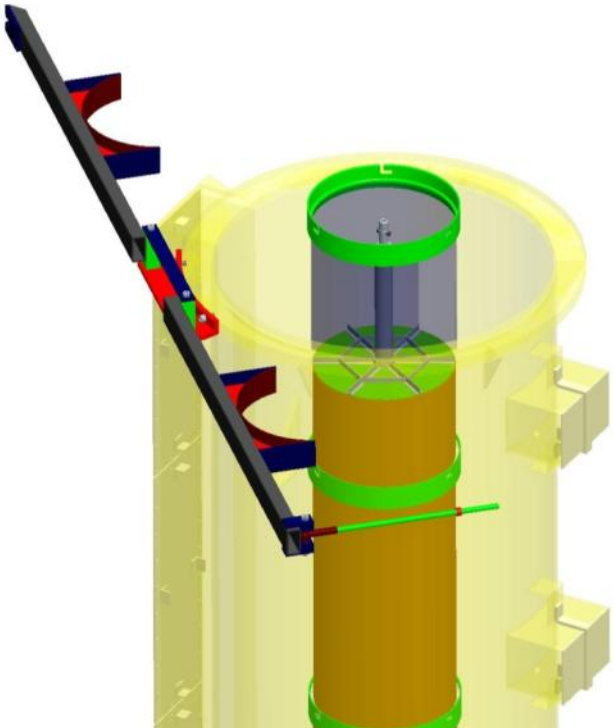

Install CWF Furnace Lid

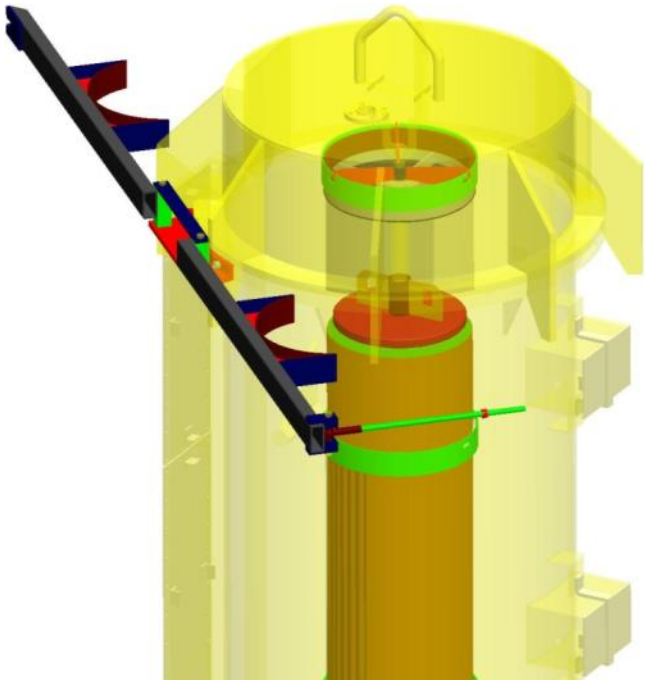

CWF Material consolidates nearly 60% during the CWF furnace process, leaving the upper two container sections empty

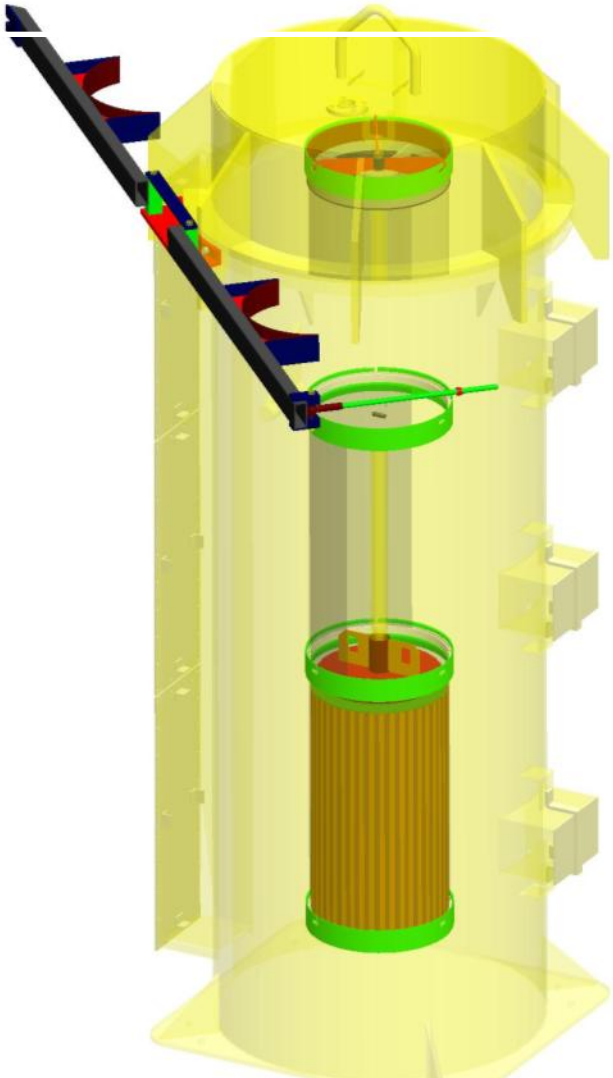

Remove CWF Furnace Lid

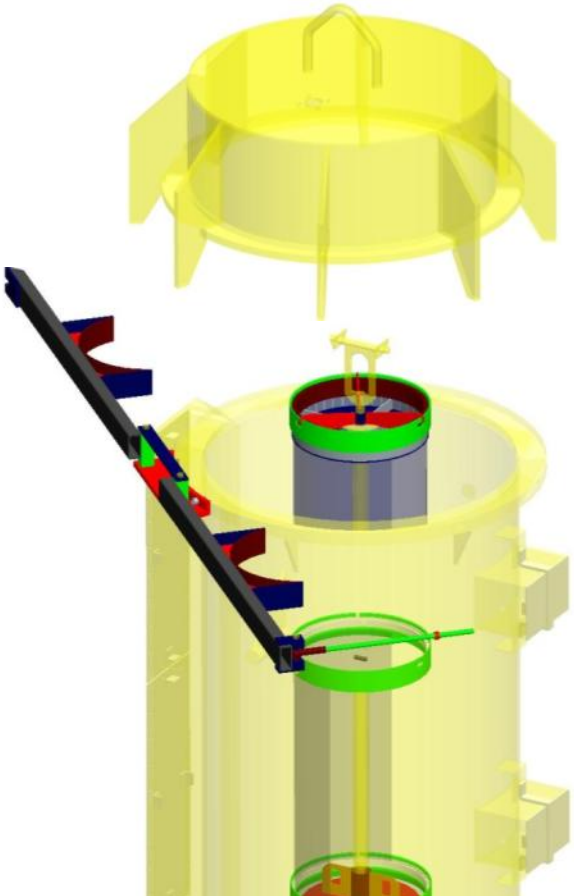

CWF Container Disassembly

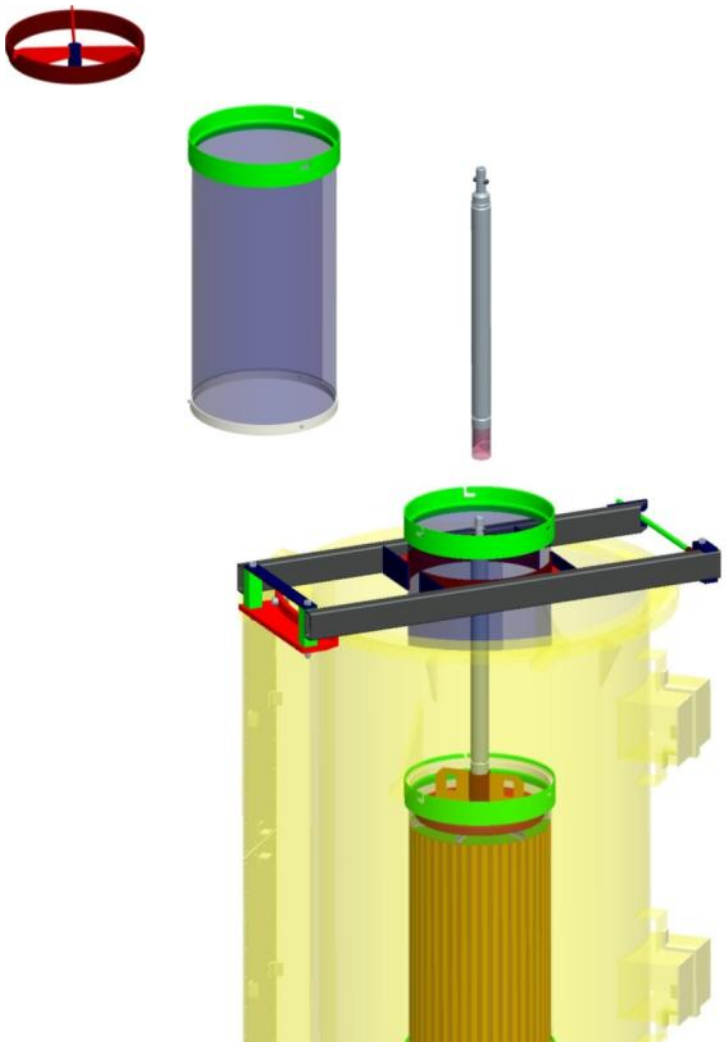

CWF Container Disassembly

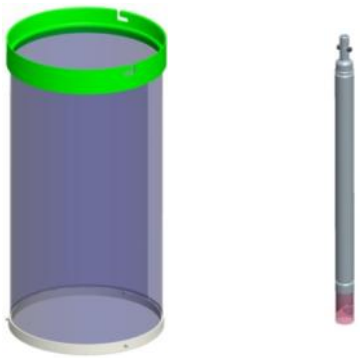

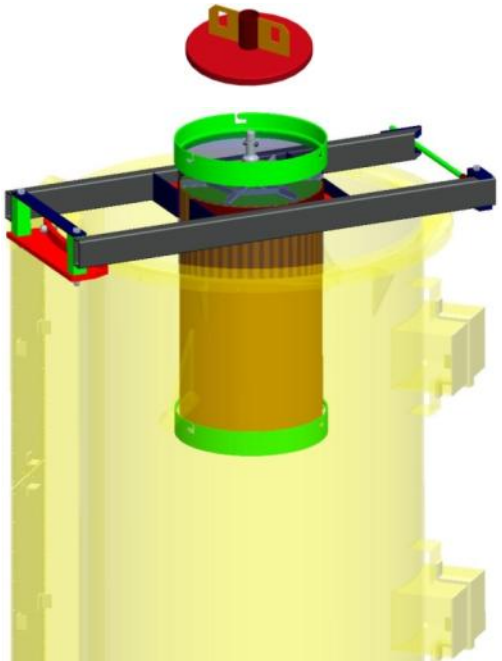

CWF Container Cover Installation

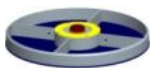

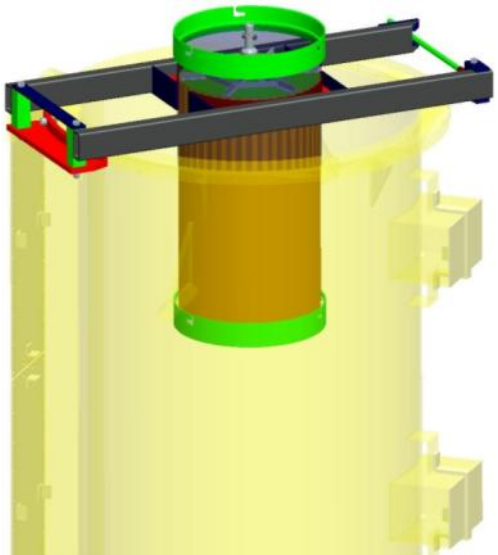

CWF Container Cover Installation

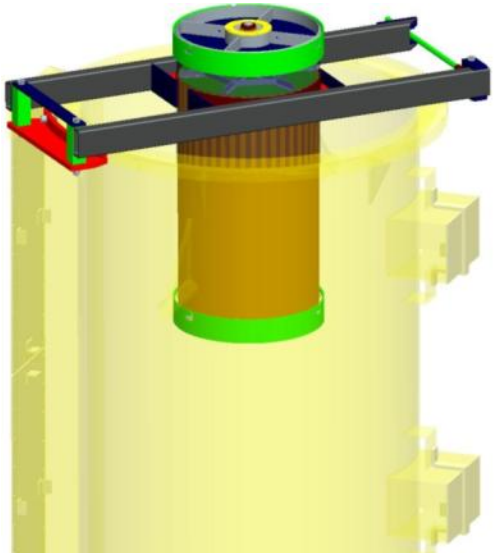

Remove CWF from Furnace

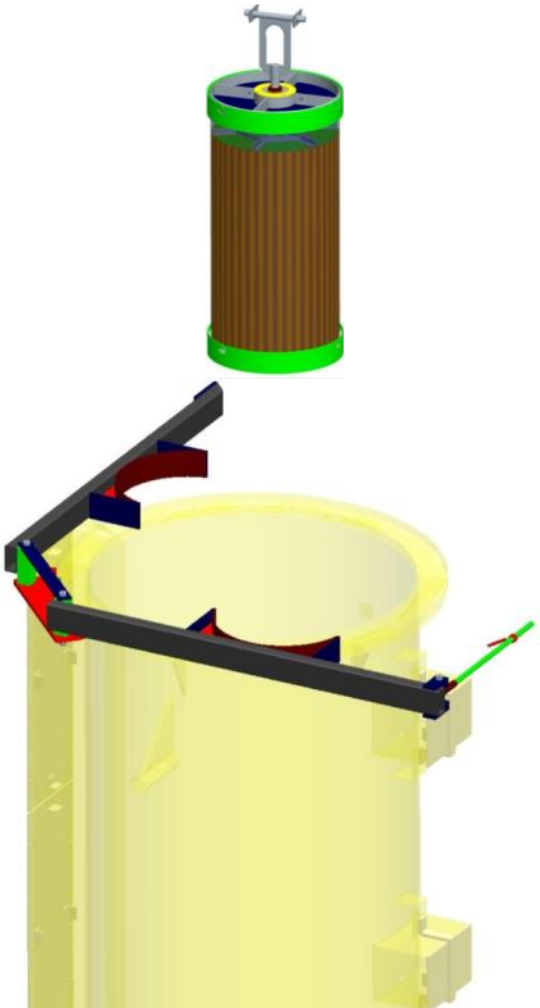

CWF Container

Surrogate Waste Form Consolidation (Doped Salt)

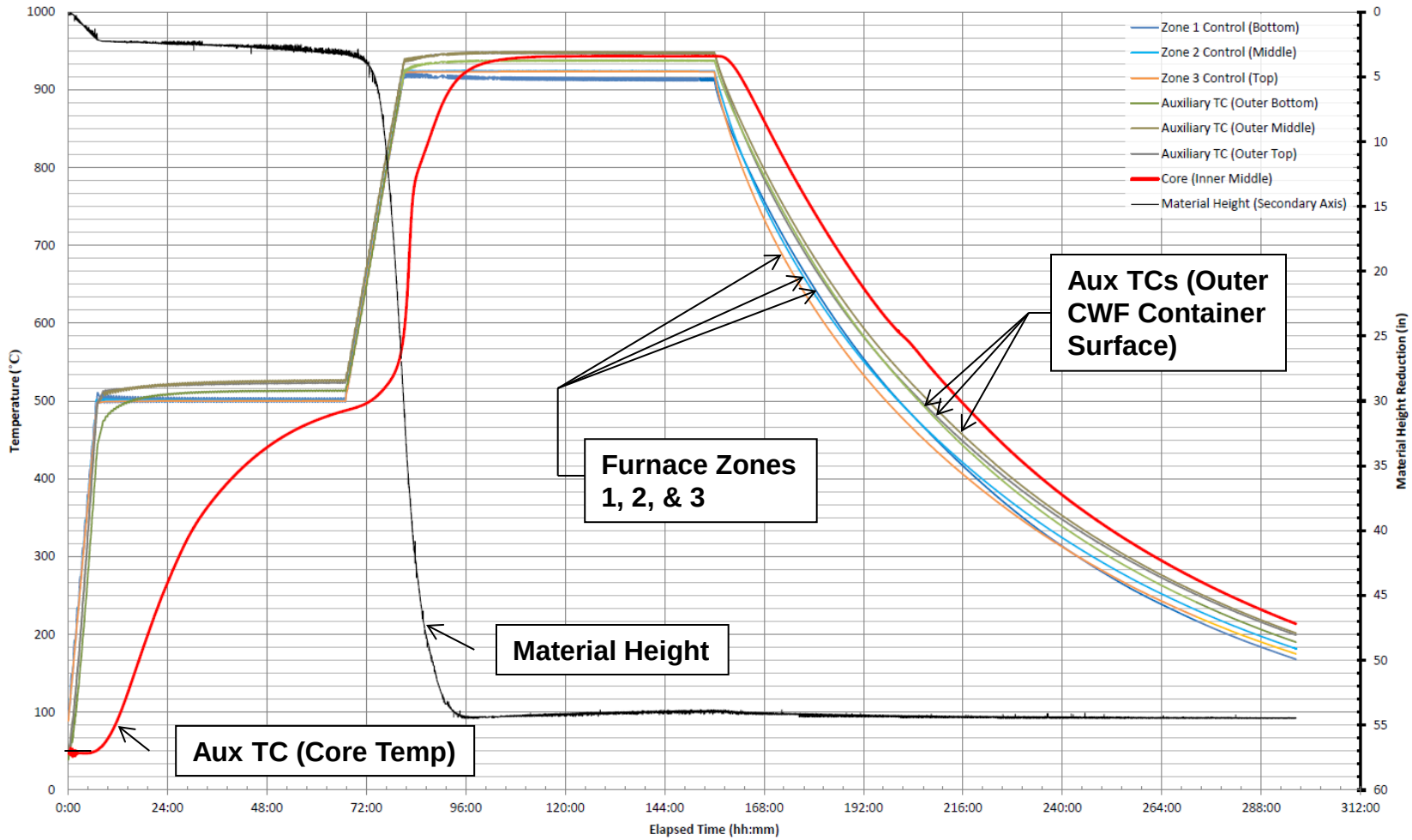

Pressureless Consolidation Results

- The multi-section canister improved volume reduction.
- Auxiliary thermocouple measurements provided a better temperature profile.
- Sound capturing was successful
- Consolidation height was accurately measured.
- Doped material continued to produce an acceptable waste form.
  - X-ray diffraction showed expected sodalite major phase.
  - Density is comparable to previous smaller scale results.
  - 60% Volume reduction achieved for all CWF Runs.

Material Preparation Run #	Batch Size	Sodalite Major Phase Achieved?	Density (g/cm^3)	Ref Density (g/cm^3)
1	378 kg	Yes	2.15	2.34
2	383 kg	Yes	2.13	
4*	378 kg	Yes	2.09	

* Material Preparation Run #3 was not consolidated

Needed Process Improvements

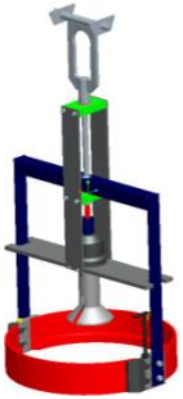

- Lifting fixture to facilitate the assembly and disassembly of the CWF container in the hot cell

- Improve the rope seal material or develop a method to replace the rope seal in a hot cell

- Design a furnace clamp the is remotely operable

Summary
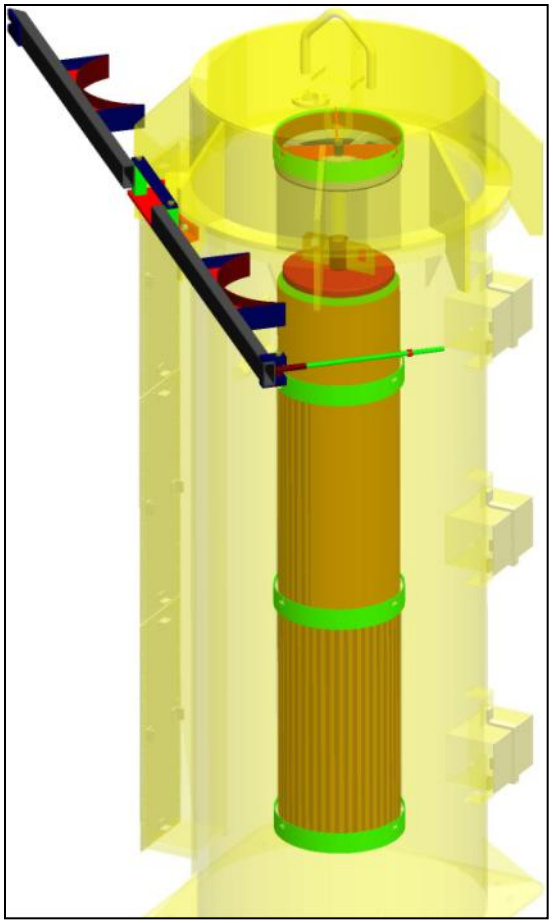
- Electrorefiner salt waste containing Group I & II and lanthanide fission products immobilized in a glass-bonded sodalite ceramic
- Process includes zeolite milling & drying, salt milling, salt/zeolite blending, and pressureless consolidation
- Several process have been implemented.
- Three full-scale surrogate ceramic waste forms have been successfully processed.